AGENDA
BUDGET & FINANCE COMMITTEE MEETING
Tuesday, May 10, 2022 at 7:00 p.m.
Jackson Municipal Complex
Village Board Room
N168W19851 Main Street
Jackson, WI 53037

1. Call to Order and Roll Call
2. Approval of Minutes for the Budget & Finance Meeting of April 12, 2022
3. Approval of April 2022 Treasurer's Report and Check Register
4. Tax Incremental Financing Services to Amend TID 7 – Ehlers Public Finance Advisors
5. Pre-Development Reimbursement Agreement – DFN Properties
6. Request for Reduction of Letter of Credit – Laurel Springs Villas – Belinski Homes
7. Contract for IT Services 2022-2024 – Pros 4 Technology
8. Sale of Village Property – Financial Management Review
9. 2022 Weights and Measures Memorandum of Understanding - WDATCP
10. Review of proposed Jackson Police Department Fitness Incentive Program
11. Review of Engineering Service – Eagle Dr & STH 60 Intersection Design
12. Review of Sewer and Water Accounts with Uncollectible Balances
13. Review of Quotes for Televising Interceptor Sanitary Sewer
14. Citizens to address the Budget & Finance Committee
15. Adjourn

Persons with disabilities requiring special accommodations for attendance at the meeting should contact the Village Hall at least one (1) business day prior to the meeting.
It is possible that members of the Village Board may attend the above meeting. No action will be taken by any governmental body at this meeting other than the governmental body specifically referred to in this meeting notice. This notice is given so that members of the Village Board may attend the meeting without violating the open meeting law.

DRAFT MINUTES
Budget & Finance Committee Meeting
Tuesday, April 12, 2022 at 6:30 p.m.
Jackson Municipal Complex
Village Board Room
N168W19851 Main Street
Jackson, WI 53037

1. Call to Order and Roll Call

Pres. Schwab called the meeting to order at 7:00 p.m.
Members Present: Trustees Heckendorf and Matter
Village Board Member Present: Trustee Kruepke
Staff Present: Administrator Keller, Director of Public Works/Village Engineer Brian Kober, Fire Chief Aaron Swaney, Police Chief Vossekuil and Village Clerk Dobratz.
Also Present: Cory Scheidler of Cedar Corporation, Taylor Cherry and Barry Rodgers of Sysco Corporation

2. Approval of Minutes for the Budget & Finance Meeting of March 8, 2022

Motion by Tr. Heckendorf, second by Tr. Matter, to approve the Budget & Finance meeting minutes of March 8, 2022.
Vote: 3 ayes, 0 nays. Motion carried.

3. Approval of the March 2022 Treasurer's Report and Check Register

Motion by Pres. Schwab, second by Tr. Heckendorf, to approve the March 2022 Treasurer's Report and Check Register as presented.
Vote: 3 ayes, 0 nays. Motion carried.

4. Acceptance of the 2022 Jackson Police Department Touchpoint/COVID 19 Wellness Grant

Motion by Pres. Schwab, second by Tr. Heckendorf, to recommend Village Board accept the 2022 Jackson Police Department Touchpoint/COVID 19 Wellness Grant.
Pres. Schwab inquired whether unused funds could be reallocated. Police Chief Vossekuil provided additional grant information stating the funding was tied strictly to the technology improvements and wellness program.
Vote: 3 ayes, 0 nays. Motion carried.

5. Municipal Complex Building Proposal – Emergency Power

Motion by Pres. Schwab, second by Tr. Matter, to advise the Village Board that funding is available for Municipal Complex Building – Emergency Power in the building expenses borrow amount.
Vote: 3 ayes, 0 nays. Motion carried.

6. Municipal Complex Building Proposal – Public Water Fountain

Motion by Pres. Schwab, second by Tr. Heckendorf, to advise the Village Board that funding is available for Municipal Complex Building – Public Water Fountain in the borrow for the complex.
Vote: 3 ayes, 0 nays. Motion carried.

7. Citizens to address the Budget & Finance Committee

None.

8. Adjourn

Motion by Pres. Schwab, second by Tr. Heckendorf, to adjourn at 6:35 p.m.
Vote: 3 ayes, 0 nays. Motion carried.

Respectfully submitted:

Jilline Dobratz, *CMC/WCPC*
Village Clerk

DRAFT

TREASURERS REPORT

(Depository Accounts)

April 30, 2022

	BALANCE 3/31/2022	BALANCE 4/30/2022
GENERAL:		
GENERAL CHECKING	$2,403,494.79	$2,403,364.88
ANTIQUE FIRE TRUCK	$2,931.29	$2,932.00
CREDIT CARD ACCOUNT	$234,115.63	$256,001.76
HIPPA ACCOUNT	$241,680.04	$272,756.01
MONEY MARKET	$6,461,310.50	$6,461,823.86
DONATION ACCOUNT	$2,128.25	$2,128.25
JUNE 2019 BORROWS	$4,919.25	$4,918.57
PARK FEES	$226,699.88	$226,754.97
FIRE/RESCUE RESERVE	$6,155.71	$6,157.21
EMS FUNDING ESCROW	$6,229.17	$6,230.68
POLICE & FIRE IMPACT FEES	$56,498.51	$56,512.24
TD AMERITRADE - 8.03M	$2,006,186.88	$1,990,960.33
TOTAL GENERAL	**$11,652,349.90**	**$11,690,540.76**
WATER UTILITY:		
WATER UTILITY DEPRECIATION FUND	$22,897.86	$22,903.42
WATER UTILITY RESERVE	$119,057.38	$119,086.31
WATER IMPACT FEES	$40,202.54	$40,212.31
TOTAL WATER UTILITY	**$182,157.78**	**$182,202.04**
SEWER UTILITY:		
SEWER DEPRECIATION FUND	$5,758.05	$5,759.45
SEWER UTILITY RESERVE	$74,355.23	$74,373.30
DNR REPLACEMENT FUND	$1,518,082.58	$1,518,451.52
SEWER SPECIAL REDEMPTION FUND	$2,503.47	$2,504.08
SO. INTERCEPTOR IMPACT FEE	$58,114.72	$58,128.84
SEWER SERVICE FEES	$1,976,496.84	$1,976,977.18
TOTAL SEWER UTILITY	**$3,635,310.89**	**$3,636,194.37**
GRAND TOTAL:	**$15,469,818.57**	**$15,508,937.17**

GENERAL VILLAGE CHECKING Accounting Checks

Posted From: 4/01/2022 From Account:
Thru: 4/30/2022 Thru Account:

Check Nbr	Check Date	Payee	Amount
47568	4/01/2022	AFNI - SUBROGATION DEPARTMENT CLAIM#AN59712 - AFNI FILE#2686443 / JFD	2,610.81
47569	4/01/2022	AIR ONE EQUIPMENT INC MISC EQUIPMENT / JFD	155.00
47570	4/01/2022	AMAZON CAPITAL SERVICES MISC SUPPLIES / JFD / REC	151.84
47571	4/01/2022	APWA MEMBERSHIP 2022 ANNUAL RENEWAL / ENGINEERING	400.00
47572	4/01/2022	BADGER FIREFIGHTERS ASSOCIATION 2022 SPRING BANQUET (2) / JFD	42.00
47573	4/01/2022	BADGER FIREFIGHTERS ASSOCIATION 2022 ANNUAL ASSOCIATION DUES / JFD	100.00
47574	4/01/2022	BALGE, ELLEN REC PROGRAM REFUND / PUMP ME UP	60.00
47575	4/01/2022	BEHAN, SONYA REC CLASS INSTRUCTION / MARCH 2022	150.00
47576	4/01/2022	BIANCUZZO, RUSSELL 2022 MONTE CARLO NIGHT MUSICIAN / REC	500.00
47577	4/01/2022	BOUND TREE MEDICAL, LLC MISC MEDICAL SUPPLIES / JFD	525.76
47578	4/01/2022	C K C GRAPHICS & SIGNS 12" ALUMINUM LETTERS & LOG0 / JPD	2,700.00
47579	4/01/2022	CATEGORY FIVE TECHNOLOGIES, INC. HAND DRYERS (6) / PARKS	2,411.10
47580	4/01/2022	CENTURY LINK TELEPHONE / MAR 2022 / STREETS / WATER	36.57
47581	4/01/2022	CLASSEY, GARY P. REIMBURSE PANTS / WALMART / WWTP	58.95
47582	4/01/2022	COMPUTER EXPLORERS /CTCE LEGO MANIA CLASS / 5 STUDENTS / REC	150.00
47583	4/01/2022	CORE & MAIN LP MISC SUPPLIES / WATER / WWTP	464.43
47584	4/01/2022	DEITSCH, JEFF L. REIMB LODGING & SUPPLIES / WATER / WWTP	583.54
47585	4/01/2022	EDGEWORTH, LINDSAY REC PROGRAM INSTRUCTION / MARCH 2022	105.00
47586	4/01/2022	EMERGENCY MEDICAL PRODUCTS, INC. MISC MEDICAL SUPPLIES / JFD	1,689.06

GENERAL VILLAGE CHECKING Accounting Checks

Posted From: 4/01/2022 From Account:
Thru: 4/30/2022 Thru Account:

Check Nbr	Check Date	Payee	Amount
47587	4/01/2022	ENDURACLEAN, INC. MISC SUPPLIES / WWTP	2,298.00
47588	4/01/2022	EQUIPMENT RENTALS INC. MONTE CARLO NIGHT / DRAPE RENTAL / REC	885.00
47589	4/01/2022	EQUIPMENT RENTALS INC. CORE DRILL & BIT RENTAL / WWTP	108.90
47590	4/01/2022	EUROFINS S-F ANALYTICAL LABS, INC SEWAGE EFFLUENT/ WWTP	66.36
47591	4/01/2022	EXPRESS NEWS MONTE CARLO NIGHT ADS / REC	1,120.00
47592	4/01/2022	FASTENAL COMPANY MISC PUMP PLANT EQUIPMENT / WATER	52.42
47593	4/01/2022	FINN, WILLIAM J 2022 MONTE CARLO NIGHT ENTERTAINMENT	4,700.00
47594	4/01/2022	FISHER, RENEE REIMB MONTE CARLO NIGHT MUGS (24) / REC	60.00
47595	4/01/2022	GALLS, LLC UNIFORM GEAR / JACKETS PANTS BOOTS / JFD	828.94
47596	4/01/2022	GERKE, KARIE E. REC CLASS INSTRUCTION / MARCH 2022	210.00
47597	4/01/2022	GK PROPERTIES JANITORIAL SERV / FEB 22 /JPD/ADMIN/REC	3,250.00
47598	4/01/2022	GLOEDE, NANCY REC CLASS INSTRUCTION / MARCH 2022	60.00
47599	4/01/2022	HAWKINS INC. REMOTE METER / WATER	437.86
47600	4/01/2022	IMPACT ACQUISITIONS LLC MONTHLY COPIER LEASE / APRIL 22 / WATER	84.00
47601	4/01/2022	IVERSON, WENDY M REC CLASS INSTRUCTION / MARCH 2022	360.00
47602	4/01/2022	LAABS, RONALD J. MONTHLY RETIREE INS PREM/APRIL 22/JPD	508.65
47603	4/01/2022	LAMB, CAITLIN REC CLASS INSTRUCTION / MARCH 2022	135.00
47604	4/01/2022	MARTELLE WATER TREATMENT, INC. AQUA MAG BULK / WATER	1,872.20
47605	4/01/2022	MCMASTER CARR SUPPLY CO STAINLESS STEEL SPRINGS (3) / WWTP	61.12

GENERAL VILLAGE CHECKING Accounting Checks

Posted From: 4/01/2022 From Account:
Thru: 4/30/2022 Thru Account:

Check Nbr	Check Date	Payee	Amount
47606	4/01/2022	MORTON SALT BULK SAFE T-SALT / STREETS	8,938.58
47607	4/01/2022	NICKALLS, ANTHONY REC CLASS INSTRUCTION / MARCH 2022	150.00
47608	4/01/2022	OFFICE DEPOT MISC SUPPLIES / REC / WWTP / WATER	393.70
47609	4/01/2022	PIEPER ELECTRIC, INC. WELL #6 NEW FLOW METER MAINT / WATER	853.00
47610	4/01/2022	PITNEY BOWES GLOBAL FINANCIAL SRV LLC QRTLY POSTAGE MACHINE LEASE / ADMIN	439.20
47611	4/01/2022	RATHKE, DANIEL R. MONTHLY RETIREE INS PREM/APR 2022/WATER	326.38
47612	4/01/2022	RELIABLE DOOR AND DOCK, INC DOOR 9 MAINTENANCE / JFD	136.13
47613	4/01/2022	RUST-OLEUM CORPORATION WATCO FLOWPATCH CONCRETE / WWTP	184.86
47614	4/01/2022	S.J. ELECTRO SYSTEMS LLC WELL PUMP REPAIR / WWTP	455.00
47615	4/01/2022	SKODINSKI, JOHN M. MONTHLY RETIREE INS PREM / APR 22 / JFD	290.34
47616	4/01/2022	STADEL, LEAH K REC CLASS INSTRUCTION / MARCH 2022	420.00
47617	4/01/2022	STEPHANY, ANDREW MAILBOX DAMAGE REIMBURSEMENT / STREETS	30.00
47618	4/01/2022	SYSCO EASTERN WISCONSIN ACTION IN JACKSON COD (10 LBS) / REC	55.00
47619	4/01/2022	TOWN & COUNTRY ENGINEERING, INC. PROF SERVICES THRU 03-19-22/WATER/WWTP	2,337.50
47620	4/01/2022	U.S. CELLULAR MONTHLY PHONE SERVICES / MAR 22 / JFD	163.31
47621	4/01/2022	WALTHER, JOHN M. MONTHLY RETIREE INS PREM/APR 2022/ADMIN	297.00
47622	4/01/2022	WIECHMANN ENTERPRISES OVERPYMNT REFUND / UTILITIES / 03-17-22	550.54
47623	4/01/2022	WMCA ONLINE TRAINING CLASS / CLERK DOBRATZ	15.00
47624	4/08/2022	4IMPRINT, INC. EMPLOYEE WELLNESS / PICKLEBALL SHIRTS	1,093.50

GENERAL VILLAGE CHECKING Accounting Checks

Posted From: 4/01/2022 From Account:
Thru: 4/30/2022 Thru Account:

Check Nbr	Check Date	Payee	Amount
47625	4/08/2022	ASCENT CONSULTING, LLC INTRO TO WELLNESS SESSION PROGRAMS / JPD	225.00
47626	4/08/2022	AT & T MONTHLY EFAX SERV / APR 22 / JPD / ADMIN	26.00
47627	4/08/2022	AT&T MONTHLY PHONE / MAR 2022 / MULTI DEPTS	422.80
47628	4/08/2022	AT&T MOBILITY SQUAD 2 WI-FI / APRIL 2022 / JPD	127.63
47629	4/08/2022	EQUAL RIGHTS DIVISION MAR 2022 WORK PERMITS / VILL OF JACKSON	52.50
47630	4/08/2022	FISHER, RENEE REIMB MONTE CARLO NIGHT GROCERIES / REC	36.25
47631	4/08/2022	GK PROPERTIES MONTHLY CLEANING / MAR 22 /ADMIN/JPD/REC	3,675.00
47632	4/08/2022	GLOBAL RECOGNITION, INC. BE ACTIVE WI SHIRTS (2) / REC	15.40
47633	4/08/2022	INTEGRITY AUTO REPAIR 2016 FORD INTERCEPTOR BRAKE MAINT / JPD	55.74
47634	4/08/2022	JACKSON TRUCK BODY 2 X2 X 1/8" STEEL TUBING (20) / STREETS	173.20
47635	4/08/2022	MARITATO, LAURA L REIMB ELECTION MEALS / COSTCO / ADMIN	65.98
47636	4/08/2022	MENARDS - WEST BEND MISC SUPPLIES / ADMIN / STREETS / PARKS	608.86
47637	4/08/2022	MLEZIVA, SARAH REC PROGRAM REFUND / TAP DANCE CLASS	100.00
47638	4/08/2022	NATIONAL ELEVATOR INSPECTION SERVICES, INC. ROUTINE INSPECTION 01-04-22 / ADMIN	68.20
47639	4/08/2022	NEU'S BUILDING CENTER, INC. HARV WAX RING & SLOAN REPAIR / PARKS	44.53
47640	4/08/2022	OFFICE DEPOT MISC SUPPLIES / REC	160.12
47641	4/08/2022	SCOUT TROOP #765 MONTE CARLO NIGHT EVENT CLEAN UP / REC	150.00
47642	4/08/2022	ST. JOSEPH'S COMMUNITY HOSPITAL DIAGNOSTIC SERVICE / 03-08-2022 / JPD	33.00
47643	4/08/2022	STREICHER'S INC. UNIFORMS / JOERGER / KRUEGER / JPD	101.96

GENERAL VILLAGE CHECKING Accounting Checks

Posted From: 4/01/2022 From Account:
Thru: 4/30/2022 Thru Account:

Check Nbr	Check Date	Payee	Amount
47644	4/08/2022	SUPERIOR CHEMICAL CORPORATION BATHROOM CLEANING PRODUCTS / PARKS	371.58
47645	4/08/2022	TSR SOLUTIONS, INC. DIAL TONE & DISASTER RECOV / APRIL 2022	300.00
47646	4/08/2022	VILLAGE MART MONTHLY FUEL & CAR WASHES / MAR 22 / JPD	2,149.13
47647	4/08/2022	VIRTUAL ACADEMY ANNUAL RENEWAL TRAINING WEBSITE / JPD	675.00
47648	4/08/2022	XEROX CORPORATION COPIER LEASE & USAGE /MAR-APR 22/ ADMIN	228.96
47649	4/14/2022	ACADEMY OF DANCE ARTS REC CLASS INSTRUCTION / 1ST QTR 2022	1,120.00
47650	4/14/2022	ACCESS DISPLAY GROUP, INC PUBLIC POSTING BOARD / MUNI COMPLEX	1,640.00
47651	4/14/2022	AMAZON CAPITAL SERVICES MISC SUPPLIES / ADMIN / REC	199.47
47652	4/14/2022	AT&T MONTHLY PHONE / APR 22 / REC / WATER	274.50
47653	4/14/2022	BEHAN, SONYA REC CLASS INSTRUCTION / APRIL 2022	345.00
47654	4/14/2022	COMPLETE OFFICE OF WISCONSIN COPIER PAPER (101 REAMS) / ADMIN	345.75
47655	4/14/2022	CONLEY MEDIA, LLC VILLAGE ADS & PUBLICATIONS / REC / ADMIN	2,295.71
47656	4/14/2022	DIGGERS HOTLINE INC. STANDARD FAX FEES/MAR 2022/WATER/WWTP	175.12
47657	4/14/2022	ENDURACLEAN, INC. BATHROOM TISSUE, GLOVES, DISPENSER/PARKS	630.68
47658	4/14/2022	GILLITZER ELECTRICAL CONTRACTORS, INC. HAND DRYER INSTALLATION/HICK & JK PARKS	953.99
47659	4/14/2022	GOSCHEY MECHANICAL INC. EXHAUST FAN & HEATING MAINT / WWTP	414.85
47660	4/14/2022	GREAT-WEST TRUST COMPANY LLC DEFERRED COMP / 04-11-2022 PAYROLL	3,714.42
47661	4/14/2022	JACKSON AUTO SERVICE TIRE DISPOSAL (6) / STREETS	72.00
47662	4/14/2022	JACKSON PROFESSIONAL POLICE ASSOCIATION POLICE UNION DUES / APRIL 2022	616.00

GENERAL VILLAGE CHECKING Accounting Checks

Posted From: 4/01/2022 From Account:
Thru: 4/30/2022 Thru Account:

Check Nbr	Check Date	Payee	Amount
47663	4/14/2022	KREUTZINGER, JEFF REIMB CELL PHONE / FEB - APR 22 / WATER	150.00
47664	4/14/2022	MUNICIPAL ENVIRONMENTAL GROUP-WASTEWATER DIV 2022 ANNUAL MEMBERSHIP DUES / WWTP	880.11
47665	4/14/2022	PAULUS, LUKE REIMB TRAINING MEALS/APR 4-7, 2022/WATER	84.31
47666	4/14/2022	RATHKE, KURT REIMB TRNG MEALS&LODGING/04-05-22/PARKS	128.60
47667	4/14/2022	RUSS, CHAD REIMB CELL PHONE / FEB - APR 2022 / WWTP	150.00
47668	4/14/2022	SECURIAN FINANCIAL GROUP, INC. MONTHLY ACCIDENT INS PREMIUMS / MAY 2022	37.78
47669	4/14/2022	SECURIAN FINANCIAL GROUP, INC. EMPLOYEE LIFE INS PREMIUMS / MAY 2022	1,242.99
47670	4/14/2022	SIGMA-ALDRICH INC NUTRIENTS, RESIDUE, DEMAND / WWTP	274.22
47671	4/14/2022	SITZBERGER & COMPANY, S.C. 2021 AUDIT / 1ST & 2ND PROGRESS BILLING	19,133.33
47672	4/14/2022	SUPPORT PAYMENT CLEARINGHOUSE 04/11/22 PAYROLL GARNISHMENT	210.77
47673	4/14/2022	WASHINGTON COUNTY FIRE CHIEFS ASSOCIATION 2022 ANNUAL DUES / JFD	200.00
47674	4/14/2022	WE ENERGIES MONTHLY GRP 0719339703-00006 / MAR 2022	48,777.48
47675	4/14/2022	WI SCTF 04/11/22 PAYROLL GARNISHMENTS	605.19
47676	4/14/2022	WIECHMANN ENTERPRISES REFUND OVERPYMT / ACCT #000-7088-01	192.20
47677	4/22/2022	4IMPRINT, INC. EMPLOYEE WELLNESS / PICKLEBALL SHIRTS	1,093.50
47678	4/22/2022	ADVANCE AUTO PARTS MONTHLY SUPPLIES / MAR22 / STREETS / JFD	645.60
47679	4/22/2022	AFLAC MAY 2022 INS PREM PAYROLL DEDUCTIONS	800.24
47680	4/22/2022	ALLIED 100 LIFEPAK CR2 AED / MUNI COMPLEX LOBBY	1,555.00
47681	4/22/2022	AMAZON CAPITAL SERVICES MISC SUPPLIES / REC / JPD	264.60

GENERAL VILLAGE CHECKING Accounting Checks

Posted From: 4/01/2022 From Account:
Thru: 4/30/2022 Thru Account:

Check Nbr	Check Date	Payee	Amount
47682	4/22/2022	ASSESSMENT TECHNOLOGIES OF WISCONSIN LLC ANNUAL ASSESSOR CONTRACT/ PYT #4 /ADMIN	2,938.89
47683	4/22/2022	AURORA HEALTH CARE OWI BLOOD DRAWS (2) / JPD	50.00
47684	4/22/2022	B&L GRAPHIC SOLUTIONS SYMPATHY CARDS & ENVELOPES (50) / JPD	55.80
47685	4/22/2022	BEACON ATHLETICS LLC BALLFIELD HOME PLATE & BASES / PARKS	435.00
47686	4/22/2022	BLAIR FIRE PROTECTION FIRE SPRINKLER SYSTEM INSPECTION / WATER	590.00
47687	4/22/2022	BMO HARRIS BANK N.A. MONTHLY VILLAGE CREDIT CARD / MARCH 2022	2,285.25
47688	4/22/2022	BOUND TREE MEDICAL, LLC MEDICAL SUPPLIES / IV CATHETERS / JFD	175.00
47689	4/22/2022	BUILDING SERVICE, INC TABLES & INSTALLATION (5) / MUNI COMPLEX	662.61
47690	4/22/2022	BUTLER, DERON REC PROGRAM REFUND / PICKLEBALL TRNMNT	10.00
47691	4/22/2022	CATHEDRAL BUILDERS, INC. BRD RM DOORS & HANG MOSAIC/MUNI COMPLEX	5,279.00
47692	4/22/2022	CDM SMITH INC STORMWATER COMPLIANCE SERV THRU 04-02-22	5,679.75
47693	4/22/2022	CEDAR CORPORATION PROF SERVICES THRU 03-19-2022	5,605.96
47694	4/22/2022	CENTURY LINK TELEPHONE SERVICES / APR 2022 / STREETS	24.53
47695	4/22/2022	CINTAS CLEANING SUPPLIES / REC	22.01
47696	4/22/2022	CIVI TEK CONSULTING LLC PROF SERVICES / MISC ADMIN / MAR 2022	501.50
47697	4/22/2022	COMPANION LIFE INSURANCE COMPANY MONTHLY LIFE INS PREMIUMS / MAY 2022	484.87
47698	4/22/2022	COUNTY WIDE EXTINGUISHER, INC. STEAMED HOOD CLEANING / REC	234.00
47699	4/22/2022	DELTA DENTAL OF WISCONSIN MAY 2022 DENTAL & VISION INSURANCE	867.58
47700	4/22/2022	DEMPSEY LAW FIRM, LLP PROF SERVICES THRU MAR 2022 / ADMIN	1,352.25

GENERAL VILLAGE CHECKING Accounting Checks

Posted From: 4/01/2022 From Account:
Thru: 4/30/2022 Thru Account:

Check Nbr	Check Date	Payee	Amount
47701	4/22/2022	DERSE, JAMES UTILITY REFUND / ACCT 000-5201-01	46.39
47702	4/22/2022	EMERGENCY MEDICAL PRODUCTS, INC. MISC MEDICAL SUPPLIES / JFD	340.88
47703	4/22/2022	FISHER, RENEE REIMB MONTHLY CELL & SUPPLIES / REC	129.99
47704	4/22/2022	FOERSTER SIGN COMPANY 1281 DECALS, CAPS & TAILGATE / JFD	212.00
47705	4/22/2022	FOX BROTHER'S PIGGLY WIGGLY MISC GROCERY/MAR 22/V.BOARD/WATER/REC	84.05
47706	4/22/2022	FROEDTERT HEALTH/WORKFORCE HEALTH PRE-EMPLOYMENT MEDICAL TEST / JFD	284.00
47707	4/22/2022	GERKE, JENNIFER F. REIMB CRIME PREV SUPPLIES / CULVERS/JPD	165.93
47708	4/22/2022	GOVOFFICE ATTN: ACCTS RECEIVABLE 2023 ANNUAL FEE WEBSITE HOSTING / ADMIN	1,020.00
47709	4/22/2022	GREATAMERICA FINANCIAL SVCS MONTHLY COPIER LEASE / APR 2022 / REC	123.00
47710	4/22/2022	GREMMER & ASSOCIATES, INC. PROF SERV COFFEEVILLE TRAIL / MARCH 2022	1,375.00
47711	4/22/2022	GRENSAVITCH, JOE REC PROGRAM REFUND / PICKLEBALL TRNMNT	10.00
47712	4/22/2022	GRENSAVITCH, TYLER REC PROGRAM REFUND / PICKLEBALL TRNMNT	10.00
47713	4/22/2022	HALLMAN LINDSAY QUALITY PAINTS ACRYLIC GLOSS ENAMEL PAINT / PARKS	155.97
47714	4/22/2022	HAWKINS INC. AQUA HAWK POLYMER / WWTP	1,395.00
47715	4/22/2022	JACKSON TRUCK BODY VALVE TOOL HITCH ADAPTOR EXT / WATER	80.00
47716	4/22/2022	JACKSON WATER UTILITY 1ST QTR 2022 VILLAGE WATER UTILITIES	3,782.49
47717	4/22/2022	KETTLE MORAINE HARDWOODS, INC. CONSTRUCTION GRADE WHITE OAK / STREETS	663.45
47718	4/22/2022	MUNICIPAL LAW & LITIGATION GROUP S.C. PROF SERVICES THRU 03-28-22 / ADMIN	5,289.90
47719	4/22/2022	OFFICE COPYING EQUIPMENT LTD COPIER USAGE 02/28/22 - 03/27/22 / REC	300.41

GENERAL VILLAGE CHECKING Accounting Checks

Posted From: 4/01/2022 From Account:
Thru: 4/30/2022 Thru Account:

Check Nbr	Check Date	Payee	Amount
47720	4/22/2022	OFFICE DEPOT MISC SUPPLIES / REC	146.59
47721	4/22/2022	PAULUS, LUKE REIMB MEAL / WATER OPERATOR TRAINING	11.70
47722	4/22/2022	PERFECT CIRCLE TIRE LLC DISMOUNT&MOUNT LOADER SPLIT RIM/STREETS	143.99
47723	4/22/2022	PIEPER ELECTRIC, INC. PUMP #5 CTH P THERMOSTAT MAINT / WATER	845.17
47724	4/22/2022	PORT PUBLICATIONS, INC. MONTE CARLO NIGHT ADS / REC	550.00
47725	4/22/2022	PROS 4 TECHNOLOGY, INC. MONTHLY TECH SUPPORT / APRIL 2022	4,672.23
47726	4/22/2022	REINDERS, INC. BALLFIELD MARKING CHALK & PAINT / PARKS	1,168.00
47727	4/22/2022	RELIABLE DOOR AND DOCK, INC WWTP SE SHED DOOR MAINT / SEWER	133.75
47728	4/22/2022	RUST LOCK, INC. MASTER PADLOCKS (25) / WATER	590.75
47729	4/22/2022	SABEL MECHANICAL LLC CLARIFIER MAINT / LABOR & PARTS / WWTP	37,048.74
47730	4/22/2022	SAM'S CLUB/GEMB MISC SUPPLIES / MARCH 2022 / REC	319.56
47731	4/22/2022	SCHROEDER, MICAH REC PROGRAM REFUND / PICKLEBALL TRNMNT	10.00
47732	4/22/2022	SHERWIN INDUSTRIES, INC. FIBER MIX BULK / STREETS	247.50
47733	4/22/2022	SIRCHIE FINGER PRINT LABORATORIES OWI TESTING SUPPPLIES (8) / JPD	126.00
47734	4/22/2022	SRF CONSULTING GROUP INC PROF SERV THRU 03-31-22/WIS 60 EAGLE DR	820.00
47735	4/22/2022	STREICHER'S INC. MISC UNIFORMS & EQUIPMENT / JPD	2,189.08
47736	4/22/2022	TEN 2 COMMUNICATIONS LLC MINITOR PAGERS & RADIO REPAIR / JFD	312.20
47737	4/22/2022	TENNIES ACE HARDWARE INC. MARCH 2022 SUPPLIES / VILLAGE/JPD/JFD	728.35
47738	4/22/2022	TREVARTHEN, MICHAEL R REIMB UNIFORM BOOTS / JPD	237.88

GENERAL VILLAGE CHECKING Accounting Checks

Posted From: 4/01/2022 From Account:
Thru: 4/30/2022 Thru Account:

Check Nbr	Check Date	Payee	Amount
47739	4/22/2022	U.S. CELLULAR MONTHLY PHONE / APR 22 / JPD / VILLAGE	849.41
47740	4/22/2022	VILLAGE MART MONTHLY FUEL / MAR 22 / VJACK/JFD/JRESCU	3,862.39
47742	4/28/2022	A/E GRAPHICS, INC. APRIL 2022 MONTHLY BILL / WATER	77.28
47743	4/28/2022	AIR ONE EQUIPMENT INC WASH & WAX (5 GALLONS) / JFD	93.50
47744	4/28/2022	AIRGAS USA, LLC RENT CYL MED LARGE OXYGEN / JFD	74.62
47745	4/28/2022	BADGER STATE WASTE LLC APRIL 2022 BIOSOLIDS HAULING / WWTP	9,145.95
47746	4/28/2022	BOUND TREE MEDICAL, LLC MISC MEDICAL SUPPLIES / JFD	291.73
47747	4/28/2022	CEDAR CORPORATION PUBLIC SAFETY BUILDING / THRU 03-19-22	7,853.11
47748	4/28/2022	CINTAS CORPORATION MONTHLY FIRST AID SUPPLIES / DPW	160.93
47749	4/28/2022	COMPLETE OFFICE OF WISCONSIN 3' x 4' TACKBOARD & INSTALL/ PYT 2 / JPD	362.50
47750	4/28/2022	EUROFINS S-F ANALYTICAL LABS, INC SEWAGE EFFLUENT/ WWTP	35.79
47751	4/28/2022	GREAT-WEST TRUST COMPANY LLC DEFERRED COMP / 04-25-2022 PAYROLL	4,118.72
47752	4/28/2022	JORDAN'S RESTORATION LLC CARPET CLEANING/W206N16191 STONEBROOK DR	250.00
47753	4/28/2022	SUPPORT PAYMENT CLEARINGHOUSE PAYROLL GARNISHMENT / 4-25-2022	210.77
47754	4/28/2022	WI SCTF PAYROLL GARNISHMENT / 4-25-2022	605.19
47755	4/28/2022	WISCONSIN DEPT OF JUSTICE BACKGROUND CHECKS (13) / MARCH 2022	91.00
47756	4/28/2022	WMCA 2022 WMCA BOARD OF REVIEW TRNG / KELLER	40.00
		Grand Total	267,358.64

GENERAL VILLAGE CHECKING Accounting Checks

Posted From: 4/01/2022 From Account:
Thru: 4/30/2022 Thru Account:

	Amount
Total Expenditure from Fund # 100 - GENERAL FUND	93,566.40
Total Expenditure from Fund # 150 - HOTEL / MOTEL	9,911.52
Total Expenditure from Fund # 200 - WATER UTILITY	25,530.19
Total Expenditure from Fund # 300 - SEWER UTILITY	80,737.16
Total Expenditure from Fund # 500 - RECREATION-VILL/TOWN	17,502.00
Total Expenditure from Fund # 600 - CAPITAL PROJECT FUND	20,162.48
Total Expenditure from Fund # 670 - TID #7	1,500.00
Total Expenditure from Fund # 800 - PARK FUND	3,128.20
Total Expenditure from Fund # 900 - FIRE & RESCUE	15,320.69
Total Expenditure from all Funds	267,358.64

VILLAGE OF JACKSON

Taking the lead in Washington County.

MEMO

TO: Mike Schwab, Village President; Budget and Finance Committee

FROM: Jen Keller, Village Administrator

RE: Request for TID 7 Amendment

DATE: May 4, 2022

Description: Statute allows for two (2) types of TID amendments, TID boundary amendments and TID plan amendments. The proposed services from Ehlers Finance Advisors relates to a boundary amendment to accommodate the request from a DFN Properties to amend TID 7 so the property can remain partially utilized for commercial and the northern portion of the lot developed for the construction of four (4) 2-unit condo building. State statue limits municipalities to four (4) of these amendments throughout the life of the TID. These amendments must remain contiguous and can add or subtract property.

Thus far the Village of Jackson improved the TID by issuing debt for the infrastructure of utilities and the roadway of Spruce and Ridgeway in the amount of $1.8M. There is no current increment in TID 7, with progress in motion for the establishment of workforce housing on the 20-acre parcel south of spruce street as studied by Vandewalle and Associates.

When consulting Ehlers regarding the cost burden for the amendment, it was stated communities will commonly transfer financial obligations of the amendment process on to the developer requesting the change. In this instance, Staff recommend consideration of a pre-development reimbursement agreement for DFN Properties LLC, the property owner to enter into with the Village for costs which will immediately become incurred to the Village for services by Ehlers Finance Advisors and any engineering work necessary for amending the TID map.

Potential Motion: Authorization for Staff to contract for financial management services for the purpose of Amending TID 7 to incorporate additional residential as proposed by DFN Properties.

Attachments:

1. Elhers Finance Advisors contract for services
2. TID 7 Map

N168 W19851
Main Street
Jackson, WI 53037
Phone: 262-677-9001
Fax: 262-677-1710

Mailing Address:
P.O. Box 637

www.villageofjacksonwi.gov

February 28, 2022

Jen Keller, Village Administrator
Village of Jackson, Wisconsin
N168W19851 Main Street
PO Box 637
Jackson, WI 53037

Re: Written Municipal Advisor Client Disclosure with the Village of Jackson ("Client") for Tax Incremental District #7 Amendment ("Project" Pursuant to MSRB Rule G-42)

Dear Jen:

As a registered Municipal Advisor, we are required by Municipal Securities Rulemaking Board (MSRB) Rules to provide you with certain written information and disclosures prior to, upon or promptly, after the establishment of a municipal advisory relationship as defined in Securities and Exchange Act Rule 15Ba1-1. To establish our engagement as your Municipal Advisor, we must inform you that:

1. When providing advice, we are required to act in a fiduciary capacity, which includes a duty of loyalty and a duty of care. This means we are required to act solely in your best interest.
2. We have an obligation to fully and fairly disclose to you in writing all material actual or potential conflicts of interest that might impair our ability to render unbiased and competent advice to you. We are providing these and other required disclosures in **Appendix A** attached hereto.

As your Municipal Advisor, Ehlers shall provide this advice and service at such fees, as described within **Appendix B** attached hereto.

This documentation and all appendices hereto shall be effective as of its date unless otherwise terminated by either party upon 30 days written notice to the other party.

During the term of our municipal advisory relationship, this writing might be amended or supplemented to reflect any material change or additions.

We look forward to working with you on this Project.

Sincerely,

Ehlers & Associates

Philip L. Cosson
Senior Municipal Advisor/Director

---

[1] This document is intended to satisfy the requirements of MSRB Rule G-42(b) and Rule G-42(c).

Appendix A

DISCLOSURE OF CONFLICTS OF INTEREST/OTHER REQUIRED INFORMATION

Actual/Potential Material Conflicts of Interest

Ehlers has no known actual or potential material conflicts of interest that might impair its ability either to render unbiased and competent advice or to fulfill its fiduciary duty to Client.

Other Engagements or Relationships Impairing Ability to Provide Advice

Ehlers is not aware of any other engagement or relationship Ehlers has that might impair Ehlers' ability to either render unbiased and competent advice to or to fulfill its fiduciary duty to Client.

Affiliated Entities

Ehlers offers related services through two affiliates of Ehlers, Bond Trust Service Corporation (BTSC) and Ehlers Investment Partners (EIP). BTSC provides paying agent services while Ehlers Investment Partners (EIP) provides investment related services and bidding agent service. Ehlers and these affiliates do not share fees. If either service is needed in conjunction with an Ehlers municipal advisory engagement, Client will be asked whether or not they wish to retain either affiliate to provide service. If BTSC or EIP are retained to provide service, a separate agreement with that affiliate will be provided for Client's consideration and approval.

Solicitors/Payments Made to Obtain/Retain Client Business

Ehlers does not use solicitors to secure municipal engagements; nor does it make direct or indirect payments to obtain or retain Client business.

Payments from Third Parties

Ehlers does not receive any direct or indirect payments from third parties to enlist Ehlers recommendation to the Client of its services, any municipal securities transaction or any financial product.

Payments/Fee-splitting Arrangements

Ehlers does not share fees with any other parties and any provider of investments or services to the Client. However, within a joint proposal with other professional service providers, Ehlers could be the contracting party or be a subcontractor to the contracting party resulting in a fee splitting arrangement. In such cases, the fee due Ehlers will be identified in a Municipal Advisor writing and no other fees will be paid to Ehlers from any of the other participating professionals in the joint proposal.

Municipal Advisor Registration

Ehlers is registered with the Securities and Exchange Commission (SEC) and Municipal Securities Rulemaking Board (MSRB).

Material Legal or Disciplinary Events

Neither Ehlers nor any of its officers or municipal advisors have been involved in any legal or disciplinary events reported on Form MA or MA-I nor are there any other material legal or disciplinary events to be reported. Ehlers' application for permanent registration as a Municipal Advisor with the (SEC) was granted on July 28, 2014 and contained the information prescribed under Section 15B(a)(2) of the Securities and Exchange Act of 1934 and rules thereunder. It did not list any information on legal or disciplinary disclosures.

Client may access Ehlers' most recent Form MA and each most recent Form MA-I by searching the Securities and Exchange Commission's EDGAR system (currently available at http://www.sec.gov/edgar/searchedgar/companysearch.html) and searching under either our Company Name (Ehlers & Associates, Inc.) or by using the currently available "Fast Search" function and entering our CIK number (0001604197).

Ehlers has not made any material changes to Form MA or Form MA-I since that date.

Conflicts Arising from Compensation Contingent on the Size or Closing of Any Transaction

The forms of compensation for municipal advisors vary according to the nature of the engagement and requirements of the client. Compensation contingent on the size of the transaction presents a conflict of interest because the advisor may have an incentive to advise the client to increase the size of the securities issue for the purpose of increasing the advisor's compensation. Compensation contingent on the closing of the transaction presents a conflict because the advisor may have an incentive to recommend unnecessary financings or recommend financings that are disadvantageous to the client. If the transaction is to be delayed or fail to close, an advisor may have an incentive to discourage a full consideration of such facts and circumstances, or to discourage consideration of alternatives that may result in the cancellation of the financing or other transaction.

Any form of compensation due a Municipal Advisor will likely present specific conflict of interests with the Client. If a Client is concerned about the conflict arising from Municipal Advisor compensation contingent on size and/or closing of their transaction, Ehlers is willing to discuss and provide another form of Municipal Advisor compensation. The Client must notify Ehlers in writing of this request within 10 days of receipt of this Municipal Advisor writing.

MSRB Contact Information

The website address of the MSRB is www.msrb.org. Posted on the MSRB website is a municipal advisory client brochure that describes the protections that may be provided by MSRB rules and how to file a complaint with the financial regulatory authorities.

Appendix B
TAX INCREMENTAL FINANCING SERVICES

Scope of Service

Client has requested that Ehlers assist Client with a Project Plan and Territory Amendment for Tax Incremental District (TID) #7 ("Project"). Ehlers proposes and agrees to provide the following scope of services:

Phase I – Feasibility Analysis

The purpose of Phase I is to determine whether the Project is a statutorily and economically feasible option to achieve the Client's objectives. This phase begins upon your authorization of this engagement and ends on completion and delivery of a feasibility analysis report. As part of Phase I services, Ehlers will:

- Consult with appropriate Client officials to identify the Client's objectives for the Project.
- Provide feedback as to the appropriateness of using Tax Incremental Financing in the context of the "but for" test.
- If the Project includes creation of or addition of territory to a district, identify preliminary boundaries and gather parcel data from Client. Determine compliance with the following statutory requirements as applicable:
    - Equalized Value test.
    - Purpose test (industrial, mixed use, blighted area, in need of rehabilitation or conservation, or environmental remediation).
    - Newly-platted residential land use test.
- Prepare feasibility analysis report. The report will include the following information, as applicable:
    - Identification of the type or types of districts that may be created.
    - A description of the type, maximum life, expenditure period and other features corresponding to the type of district proposed.
    - A summary of the development assumptions used with respect to timing of construction and projected values.
    - Projections of tax increment revenue collections to include annual and cumulative present value calculations.
    - Qualification of the district as a donor or recipient of shared increment, and projected impact of any allocations of shared increment.

- If debt financing is anticipated, a summary of the sizing, structure and timing of proposed debt issues.

- A cash flow *pro forma* reflecting annual and cumulative district fund balances and projected year of closure.
- A draft timetable for the Project.
- Identification of how the creation date may affect the district's valuation date, the base value, compliance with the equalized value test, and the ability to capture current year construction values and changes in economic value.
- When warranted, evaluate and compare options with respect to boundaries, type of district, project costs and development levels.
- Ehlers will provide guidance on district design within statutory limits to creatively achieve as many of the Client's objectives as possible and will provide liaison with State Department of Revenue as needed in the technical evaluation of options.

- Present the results of the feasibility analysis to the Client's staff, Plan Commission, or governing body.

Phase II – Project Plan Development and Approval

If the Client elects to proceed following completion of the feasibility analysis, the Project will move to Phase II. This phase includes preparation of the Project Plan, and consideration by the Plan Commission[1], governing body, and the Joint Review Board. This phase begins after receiving notification from the Client to proceed and ends after the Joint Review Board acts on the Project. As part of Phase II services, Ehlers will:

- Based on the goals and objectives identified in Phase I, prepare a draft Project Plan that includes all statutorily required components.
- We will coordinate with your staff, engineer, planner or other designated party to obtain a map of the proposed boundaries of the district, a map showing existing uses and conditions of real property within the district, and a map showing proposed improvements and uses in the district.
- Submit to the Client an electronic version of the draft Project Plan for initial review and comment.
- Coordinate with Client staff to confirm dates and times for the meetings indicated within the table beginning on the following page. Ehlers will ensure that selected dates meet all statutory timing requirements and will provide documentation and notices as indicated.

[1]If Client has created a Redevelopment Authority or a Community Development Authority, that body may fulfill the statutory requirements of the Plan Commission related to creation or amendment of the district.

Meeting	Ehlers Responsibility	Client Responsibility
Initial Joint Review Board	Prepare Notice of Meeting and transmit to Client's designated paper. Mail meeting notice, informational materials, and draft Project Plan to overlapping taxing jurisdictions. Provide agenda language to Client. Attend meeting to present draft Project Plan.	Post or publish agenda and provide notification as required by the Wisconsin Open Records Law. Prepare meeting minutes. Designate Client Joint Review Board representative. Identify and recommend Public Joint Review Board representative for appointment.
Plan Commission Public Hearing	Prepare Notice of Public Hearing and transmit to Client's designated paper.	Post or publish agenda and provide notification as required by the Wisconsin Open Records Law.
Plan Commission Public Hearing	For blighted area districts and in need of rehabilitation or conservation districts, provide a format for the required individual property owner notification letters. Attend hearing to present draft Project Plan.	Prepare and mail individual property owner notices (only for districts created as blighted area, or in need of rehabilitation or conservation). Prepare meeting minutes.
Plan Commission	Provide agenda language to Client. Attend meeting to present draft Project Plan. Provide approval resolution for Plan Commission consideration.	Post or publish agenda and provide notification as required by the Wisconsin Open Records Law. Distribute Project Plan & resolution to Plan Commission members in advance of meeting. Prepare meeting minutes.
Governing Body Action	Provide agenda language to Client. Attend meeting to present draft Project Plan. Provide approval resolution for governing body consideration.	Post or publish agenda and provide notification as required by the Wisconsin Open Records Law. Provide Project Plan & resolution to governing body members in advance of meeting. Prepare meeting minutes.

Joint Review Board Action	Mail meeting notice and copy of final Project Plan to overlapping taxing jurisdictions. Prepare Notice of Meeting and transmit to Client's designated paper. Provide agenda language to Client. Attend meeting to present final Project Plan. Provide approval resolution for Joint Review Board consideration.	Post or publish agenda and provide notification as required by the Wisconsin Open Records Law. Prepare meeting minutes.

- Throughout the meeting process, provide drafts of the Project Plan and related documents in sufficient quantity for the Client's staff, Plan Commission, governing body and Joint Review Board members.
- Provide advice and updated analysis on the impact of any changes made to the Project Plan throughout the approval process.

Phase III – State Submittal

This phase includes final review of all file documents, preparation of filing forms, and submission of the base year or amendment packet to the Department of Revenue. This phase begins following approval of the district by the Joint Review Board and ends with the submission of the base year or amendment packet. As part of Phase III services, Ehlers will:

- Coordinate with Client's assessor and other staff as necessary to obtain parcel valuations, parcel data and other information needed for preparation of the State forms that must be filed as part of the base year or amendment packet.
- Assemble and submit to the Department of Revenue the required base year or amendment packet to include a final Project Plan document containing all required elements and information.
- Provide the Client with an electronic copy of the final Project Plan (and up to 15 bound hard copies if desired).
- Provide the municipal Clerk with a complete electronic and/or hard copy transcript of all materials as submitted to the Department of Revenue for certification.
- Act as a liaison between the Client and the Department of Revenue during the certification process in the event any questions or discrepancies arise.

Compensation

In return for the services set forth in the "Scope of Service," Client agrees to compensate Ehlers as follows:

Phase I	$ 6,000
Phase II	$ 7,500
Phase III	$ 2,000
Total	**$ 15,500**

- In the event Client determines not to proceed with the Project once a Phase has been authorized, but prior to that Phase's completion, the compensation due for that Phase will be prorated to reflect the percentage of the work completed.

Payment for Services

For all compensation due to Ehlers, Ehlers will invoice Client for the amount due at the completion of each Phase. Our fees include our normal travel, printing, computer services, and mail/delivery charges. The invoice is due and payable upon receipt by the Client.

Client Responsibility

The following expenses are not included in our Scope of Services, and are the responsibility of Client to pay directly:

- Services rendered by Client's engineers, planners, surveyors, appraisers, assessors, attorneys, auditors and others that may be called on by Client to provide information related to completion of the Project.
- Preparation of maps necessary for inclusion in the Project Plan.
- Preparation of maps necessary for inclusion in the base year or amendment packet.
- Publication charge for the Notice of Public Hearing and Notices of Joint Review Board meetings.
- Legal opinion advising that Project Plan contains all required elements. (Normally provided by municipal attorney).
- Preparation of District metes & bounds description. (Needed in Phase III for creation of new districts, or amendments that add or subtract territory).
- Department of Revenue filing fee and annual administrative fees. The current Department of Revenue fee structure is:

Current Wisconsin Department of Revenue Fee Schedules

Base Year Packet	$1,000
Amendment Packet with Territory Addition	$1,000
Amendment Packet with Territory Subtraction	$1,000
Base Value Redetermination	$1,000
Amendment Packet	No Charge
Annual Administrative Fee	$150

TID #7

June 5, 2019

N

1:3,750

0 0.03 0.06 0.12 mi

0 0.05 0.1 0.2 km

VILLAGE OF JACKSON

Taking the lead in Washington County.

MEMO

TO: Mike Schwab, Village President; Budget and Finance Committee

FROM: Jen Keller, Village Administrator

RE: Pre-Development Reimbursement Agreement – DFN Properties, LLC.

DATE: May 5, 2022

Description: At the April 12, 2022 Village Board meeting, DFN Properties, LLC. proposed a two-lot CSM for approval to the Village Board. The CSM was approved upon a condition that the Village Board agree to proceed with a TID amendment as the developer intended to change the use of the parcel to no longer include all commercial development as reflected in the TID 7 plan.

Potential Motion: Approval of the predevelopment reimbursement agreement between the Village of Jackson and DFN Properties, LLC.

Attachments:

1. Draft Pre-Development Reimbursement Agreement

N168 W19851
Main Street
Jackson, WI 53037
Phone: 262-677-9001
Fax: 262-677-1710

Mailing Address:
P.O. Box 637

www.villageofjacksonwi.gov

PRE-DEVELOPMENT REIMBURSEMENT AGREEMENT

Pre-Development Reimbursement Agreement ("Agreement") dated this ____ day of May 2022 by and between the Village of Jackson, Washington County, Wisconsin, and DFN Properties, LLC. ("Developer").

Recitals

A. Developer wishes to amend the TID 7 plan previously approved by the Village to change the use of parcel V3_ 046500D9999 from Commercial use to commercial and residential use as to align the separate uses with the previously approved two-lot CSM for the property.

B. The Village has expressed its willingness to consider the project. However, its review will require the Village to retain professional services, including, without limitation, financial consultants, engineers, and attorneys. The Village believes it is appropriate for Developer to reimburse the Village for its reasonable professional fees together with out-of-pocket Village expenses such as hearing notices, per diem hearing fees, and other established expenses. In addition, the parties contemplate the negotiation and potential execution of a Development Agreement for which professional fees will be incurred.

C. The execution of this Agreement does not constitute a waiver of the Village's discretion to approve, modify, or deny the project to the extent that these actions are within the Village's jurisdiction. All rights are reserved.

NOW, THEREFORE, in consideration of the above recitals, and for other good and valuable consideration mutually acknowledged by the parties, it is agreed as follows:

1. Reimbursement of Professional Fees. The Village will incur professional fees relating to the project. These fees will likely include professional services rendered by financial consultants, engineers, and attorneys (together "Professional Fees"). Professional Fees will be incurred to complete the review of plans, negotiation and execution of a development agreement, and the design, administration, supervision, review, and enforcement of commitments relating to the project. Developer agrees to pay the Village's invoices regarding Professional Fees within 30 days of the issuance of the Village's invoices identifying such additional fees. Late payment shall bear interest at the rate of 8% per annum.

DRAFT

2. Reimbursement of Village Expenses. In addition to the obligation to reimburse the Village for its incurred Professional Fees, Developer agrees to reimburse the Village for all out-of-pocket expenses relating to the Village's review of the project, including hearing notices, per diem fees and other established Village expenses incurred to process the review of the project. The payment terms described in Section 1, above, apply to the reimbursement of the Village's expenses described in this Section 2.

3. Condition Precedent. The execution of this Agreement constitutes a condition precedent to any further action or obligation to be taken or assumed by the Village relating to the project. In addition to the execution of this Agreement, Developer acknowledges that the project requires various hearings and approvals, including, without limitation, the approval of the Village Board. The Village cannot assure Developer that all such approvals will be granted; however, the Village will address project applications in a timely fashion. Developer acknowledges that it has no property interest in the issuance of Village approvals relating to the project.

4. Village-No Obligation. The Village shall have no obligation or liability for any obligations or responsibilities to any lending institution, contractor, or subcontractor or any other party retained by Developer relating to the project. Developer specifically agrees that no representation, statements, assurances or guarantees will be made by Developer to any third-party or by any third-party, which is contrary to this provision.

5. Development Agreement. The project will require the approval of a development agreement by the Village. This Agreement is intended to supplement and complement the contemplated development agreement. However, if there is a conflict between these respective documents, the document imposing the greater responsibility or liability on Developer shall control.

6. Authority. Developer represents and warrants to the Village that the person executing this Agreement has been duly authorized to so execute and to cause Developer to enter into this Agreement. Developer further represents that this Agreement is enforceable in accordance with its terms.

7. Miscellaneous. Developer may not assign this Agreement without the prior written consent of the Village. No modification or amendment to this Agreement shall be binding upon either party until such modification or amendment is reduced to writing and executed by both parties. This Agreement may be signed in any number of counterparts with the same effect as if the signatures were upon the same instrument. A facsimile or digital signature has the same effect as an original signature. If any provision in this Agreement is held to be unenforceable by a court of competent jurisdiction, the remaining provisions shall remain in full force and effect.

DRAFT

IN WITNESS WHEREOF, the parties have signed this Agreement as of the above date.

VILLAGE OF JACKSON

By: _____
Mike Schwab, Village President

Attest:

_____
Jilline Dobratz, Clerk

DFN Properties, LLC.

By: _____
Authorized Representative

Memo

To: Jen Keller, Village Administrator

From: Brian W. Kober, P. E., Director of Public Works BWK

Subject: Laurel Springs Villas Development – Letter Credit Reduction

Date: May 2, 2022

CC: John Donovan, Bielinski Homes

The Village of Jackson has reviewed the letter of reduction as submitted by John Donovan from Bielinski Homes for Laurel Spring Villas Development. The Village of Jackson has accepted the utilities in Laurel Springs Villas Development per Resolution 22-03, and can release the remaining letter of credit amount

Recommend releasing the remaining amount of the letter of credit in the amount of $39,669.00.

If you have any questions, please let me know.

Brian W. Kober, P.E.

BIELINSKI
HOMES

Date: 1/27/2022

Village of Jackson – via email

Jen Keller, Village Administrator

N168 W19851 Main Street

Jackson, WI 53037

Re: Letter of Credit Reduction Request #2 "Final" one-year warranty has been completed at Laurel Springs Villas, in the Village of Jackson, Wisconsin.

Dear John:

Due to the one-year warranty now being completed, Bielinski is requesting the "Final" reduction of the Letter of Credit in place for Laurel Springs Villas:
Requesting the following reduction per the Developers Agreement.

Laurel Springs Villas, Village of Jackson, WI

Item(s)	Amount	LOC Reduction	Balance
Contingencies (15%)	$39,669.00	$39,669.00	$0.00
Letter of Credit Amount			**$0.00**

LETTER OF CREDIT AMOUNT: **$ 39,669.00**

NET REDUCTION ALLOWED REQUEST #2: **$ 39,669.00**

BALANCE OF LETTER OF CREDIT: **$ 0.00**

By copy of this letter, we hereby request a reduction of the above amount.

Bielinski Homes, Inc.: _____ Title: Development Manager
1/27/22

The Village of Jackson hereby accepts the Letter of Credit Reduction on the work completed above.

EXHIBIT "D"

Bielinski Development, Inc. 7.31.20

Letter Of Credit On Public Improvement Costs

Laurel Springs Villas, Village of Jackson, WI

Item(s)	Amount
Complete Water System Construction (Villas)	$138,080.00
Complete Sanitary Sewer Construction (Villas)	$126,380.00
Subtotal	**$264,460.00**
Contingencies (15%)	**$39,669.00**
Letter of Credit Amount	**$304,129.00**

RESOLUTION #22-03

A RESOLUTION ACCEPTING THE SANITARY SEWER AND WATER SYSTEM ASSOCIATED WITH THE LAUREL SPRINGS VILLAS DEVELOPMENT

The Village Board of the Village of Jackson, Washington County, Wisconsin, does resolve as follows:

BE IT RESOLVED, that the Village Board hereby accepts, pursuant to the provisions of Chapter 44 of the Village Code, the Sanitary Sewer and Water System associated with the Laurel Springs Villas Development in the Village of Jackson, Washington County, Wisconsin.

Introduced by: Tr. Emmrich

Seconded by: Tr. Heckendorf

Vote: 7 Ayes 0 Nays

Passed and Approved: March 8, 2022

Michael E. Schwab – Village President

Attest: Jilline S. Dobratz – Village Clerk

Proof of Posting:

I, the undersigned, certify that I posted this Resolution on posting boards at the Jackson Municipal Complex, Post Office, and one other location in the Village.

Village Official

March 9, 2022
Date

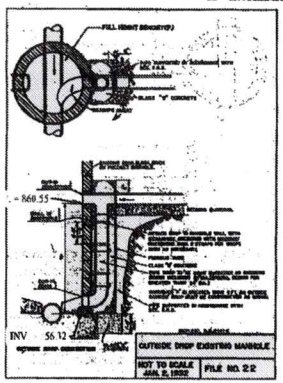

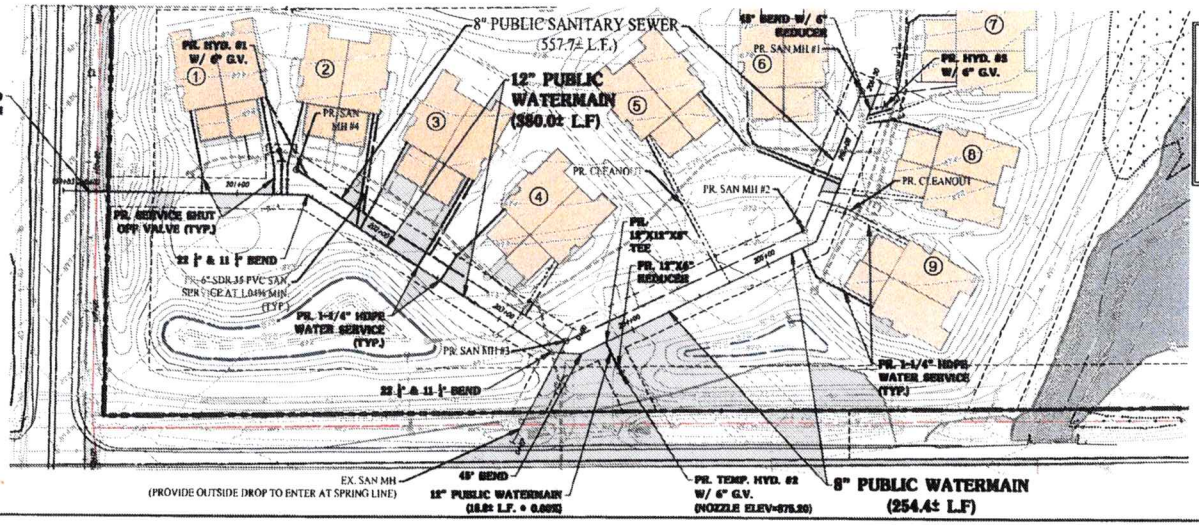

WATER MAIN NOTES

WATERMAIN

- ALL 6", 8", 12" & 16" WATER MAIN CONSTRUCTED AS PART OF THIS PLAN SHALL BE PVC, C-900, CLASS 150 (DR-18).
- PVC PIPE SHALL MAKE PUSH-ON JOINTS WITH RUBBER GASKET.
- ANCHOR TEES SHALL BE USED FOR EACH HYDRANT BRANCH.
- ALL WATER MAINS CALLED FOR ON THESE PLANS ARE TO BE INSTALLED WITH CLASS "B" BEDDING AS SPECIFIED IN CH. 4.3.0, LAYING OF WATER MAIN, AND FILE NO. 30, PART 10 (TRENCH).
- HYDRANT NOZZLE ELEVATION SHALL BE 20" ABOVE FINISHED GRADE.

TRACER WIRE NOTE

- CONTRACTOR SHALL INSTALL PLASTIC COATED TRACER WIRE (10 GAUGE SOLID COPPER) PER CONN ELIN(211)(G). PLASTIC WIRE MAY BE TAPED TO PLASTIC PIPE. IF ATTACHED, THE TRACER SHALL BE SECURED EVERY 5 FEET AND AT ALL BENDS. TRACER WIRE SHALL HAVE ACCESS POINTS AT LEAST EVERY 300 FEET.

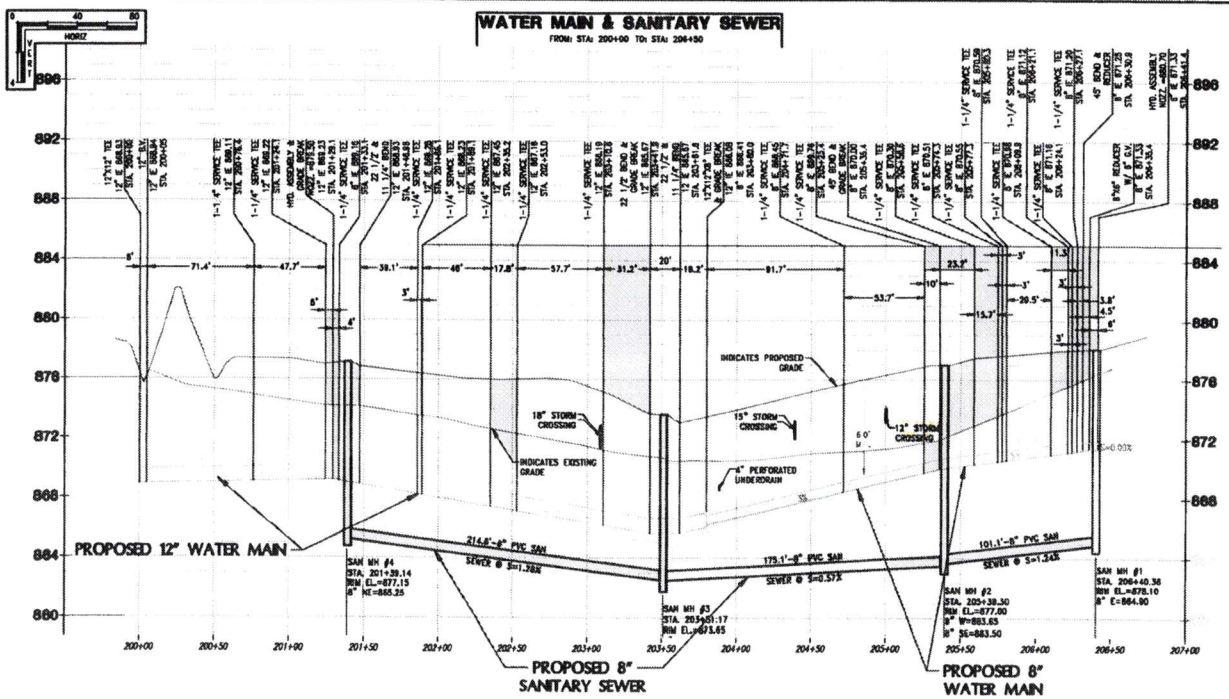

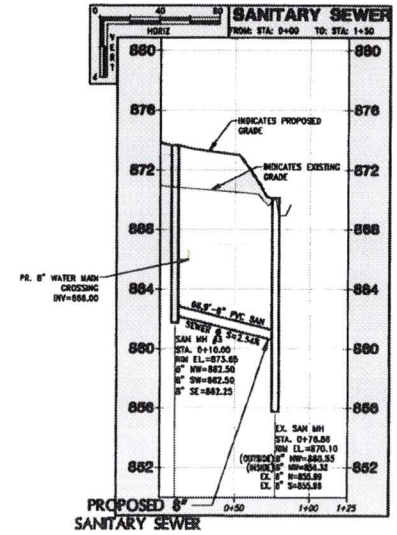

PROJECT:
LAUREL SPRINGS VILLAS
MULTI-FAMILY RESIDENTIAL DEVELOPMENT
VILLAGE OF JACKSON, WISCONSIN
BY: BIELINSKI HOMES
1930 MEADOW LN, SUITE A

TRIO

REVISION HISTORY	
DATE	DESCRIPTION
8/17/2020	UTILITY EASEMENT UPDA
9/18/2020	UTILITY REVISIONS
9/28/2020	GRADING REVISIONS
9/28/2020	PER VILLAGE COMMENT
10/14/2020	PER VILLAGE COMMENT
11/30/2020	INTERIM GRADING REVISI
12/18/2020	SITE DRAINAGE REVISIO

DATE:
JUNE 16, 2021

JOB NUMBER:
19029-02

DESCRIPTION:
PROPOSED CEDAR CREEK ROAD WATER MAIN PLA

SHEET
C3.1

Taking the lead in Washington County.

MEMO

TO: Mike Schwab, Village President; Budget and Finance Committee

FROM: Jen Keller, Village Administrator

RE: Master Customer Agreement and Statement of Work – Pros 4 Technology

DATE: May 6, 2022

Description: Pros 4 Technology has provided professional IT services for many Village Departments for well over 10 years. It was brought to my attention early last year there were several departments the vendor serviced, and some departments were under contract for annual services, and some were not. It was also necessary for Staff to bid out work for various additional IT systems that would be in place at the municipal complex. As such, Staff continued professional services with IT provider Pros 4 Technology without one consolidated contract last year, in the hopes of seeing how vendors responded to requests for proposals for additional IT systems such as the security camera program and the door access program. Now that these steps are complete, it now makes sense to enter into one agreement for general IT services to address past and expanded services to all Village Departments.

Attached you will find the 2022-2024 Master Customer Agreement and Statement of work that is recommended for approval between the Village of Jackson and Pros 4 Technology. 2022 budgeting for this agreement included all rates associated with the contract. Attorney Ryan Plisch and I have negotiated with Pros 4 Technology since December to address certain provisions in the boiler plate contract that were not amenable to Staff. However, this final version provides the Village more assurances such as locked in rates for two (2) years as well as guarantee that the Village would not need to return the provider Microsoft Office Licenses or hardware purchased through the provider should the parties terminate the agreement. Attorney Plisch advises that should the relationship between the provider and Village expand to include the Village purchasing Pros 4 Technology owned programs, domain management, custom software, etc. then the agreement should be revisited because the Village would want to ensure ownership of those items. Secondly, there are limitations for liability of risk Pros 4 Technology would assume in the contract outside of the professional errors and omissions coverage. There is some lower risk considerations to make since the relationship with the provider is for basic IT support. Staff will continue to review liability coverage we retain via our insurance carrier CVMIC. As the insurance industry continues to see spikes in premiums for losses of data or hardware paired with limitations of coverage or higher deductibles implemented, Staff will continue to ensure there is sufficient coverage should the Village experience such a loss.

/JK

N168 W19851
Main Street
Jackson, WI 53037
Phone: 262-677-9001
Fax: 262-677-1710

Mailing Address:
P.O. Box 637

www.villageofjacksonwi.gov

villPROS 4 TECHNOLOGY, INC. MASTER CUSTOMER AGREEMENT
GENERAL TERMS

This **MASTER CUSTOMER AGREEMENT** (the "**Agreement**") is entered into as of April 1, 2022, ("**Effective Date**") between Pros 4 Technology, Inc., a corporation, located at 818 E. Clifford St. Plymouth, WI 53073 ("**MSP**") and Village of Jackson a Wisconsin Municipality located N168W19851 Main St, Jackson, WI 53037("**Customer**").

1. SCOPE OF AGREEMENT. This Agreement serves as a master agreement and applies to Customer's and its Affiliates' purchases from MSP, or any of its Affiliates, of services ("Services"), as well as licenses for software, hardware, support and maintenance services, and/or subscription services (collectively, "**Product**"). For purposes of this Agreement, "**Affiliate**" means any entity that, directly or indirectly through one or more intermediaries, controls or is controlled by or under common control with Customer or MSP, as the case may be. No Product or Services will be provided under this Agreement alone, but may require the execution of a written or electronic order form, or other mutually acceptable order documentation (including, without limitation, Statements of Work for Products and Services as further described below) (each, an "**Order**"), which contains terms relating to this Agreement, each of which must be executed by both parties and, upon such execution, is deemed incorporated in this Agreement for all purposes. Any Statement of Work will contain the information listed in and will be substantially in the form of Exhibit A attached hereto. The parties hereby further agree that the parties may execute multiple Orders and Statements of Work under this Agreement. In the event of any conflict between the terms of the Statement of Work and those of this Agreement, the terms of the Statement of Work will prevail.

2. TERM AND TERMINATION. This Agreement will begin on the Effective Date and will continue until each Order expires or is terminated. MSP may: (a) terminate a specific Order if Customer fails to pay any applicable fees due for that Order within 30 days after receipt of written notice from MSP of non-payment; and/or (b) terminate this Agreement or an Order if Customer commits any other material breach of this Agreement and fails to cure such breach within 30 days after receipt of written notice from MSP. Upon any termination of the right to use a Product, Customer will immediately uninstall (if the Product is software) and cease to use the terminated Product and, upon MSP's written request, immediately return such Product to MSP, together with all related documentation, and copies thereof; provided, however, that Customer shall have no obligation to uninstall or cease use of Customer's Microsoft Office licenses and/or hardware purchased by the Customer (if any). Upon written request of MSP, Customer will promptly certify in writing to MSP that all copies of the Product have been returned, and that any copies not returned have been destroyed. If an Order for Services is terminated, Customer will promptly pay MSP for Services rendered, and expenses incurred through the termination date. MSP may terminate any license granted for a Deliverable (as defined below) if (i) Customer does not pay MSP for that Deliverable in accordance with this Agreement, or (ii) if Customer materially breaches any part of Section 4 of this Agreement.

3. PAYMENT AND DELIVERY. Customer will pay MSP all fees due upon receipt of an invoice specifying the amounts due ("**Fees**"). All Fees payable under this Agreement are exclusive of sales, use, VAT, customs duties, excise, and any other applicable transaction taxes, which Customer will pay (excluding taxes based upon the net income of MSP). If payment is not received on or before any invoice due date, interest shall begin to accrue and be payable at the lesser of the maximum rate permitted under applicable law or at the rate of one and one-half percent (1.5%) per month from the date due until paid in full. Customer's obligation to pay undisputed amounts due for Services and MSP's right to all such amounts are absolute and unconditional. Customer is not entitled to setoff of such amounts. All Product is FOB shipping point. All Fees will be detailed in an Order. Unless otherwise stated in a Statement of Work, Customer agrees to pay or reimburse MSP for all actual, necessary, and reasonable expenses incurred by MSP in performance of such Statement of Work, which are capable of verification by receipt. MSP will submit invoices to Customer for such fees and expenses either upon completion of the Services, or at stated intervals, in accordance with the applicable Statement of Work.

4. PROPRIETARY RIGHTS AND CONFIDENTIALITY.

4.1. Proprietary Rights. MSP, or its Affiliates or licensors, retains all right, title and interest in any and all intellectual property, informational, industrial property and moral rights in the Product, and copies thereof. MSP neither grants nor otherwise transfers any rights of ownership in the Product to Customer. The Product is protected by applicable copyright and trade secrets laws, and other forms of intellectual property, informational and industrial property protection.

4.2. Product. Customer may only use and disclose Product in accordance with the terms of this Agreement and applicable Order. MSP reserves all rights in and to the Product not expressly granted in this Agreement. Customer may not disassemble or reverse engineer any software Product, or decompile or otherwise attempt to derive any software Product's source code from executable code, except to the extent expressly permitted by applicable law despite this limitation, or provide a third party with the results of any functional evaluation, or benchmarking or performance tests on the Products, without MSP's prior written approval. Except as expressly authorized in this Agreement or an Order, Customer may not (a) distribute the Product to any third party (whether by rental, lease, sublicense or other transfer), or (b) operate the Product in an outsourcing or service provider business to process the data of third parties. Additional usage restrictions may apply to certain third-party files or programs embedded in the Product - applicable installation instructions or release notes will contain the relevant details.

4.3. Services Deliverables licensed under this Agreement.

(a) License. Subject to the terms of this Agreement, MSP grants Customer a perpetual, non-exclusive, non-transferable license to use and modify all programming, documentation, reports, and any other deliverables provided as part of the Services ("Deliverables") solely for its own internal use.

(b) Pre-Existing License Agreements. Any software product provided to Customer by MSP as a reseller for a third party, which is licensed to Customer under a separate software license agreement with such third party (such agreement, an "SLA"), will continue to be governed by the SLA. The fulfillment of the Services will not relieve or alter the obligations or responsibilities of either party or of any third party in regards to the software product licensed under the SLA.

(c) Ownership. MSP owns all right, title and interest in the Deliverables, *including* all intellectual property rights embodied therein. Nothing in this Agreement is intended to or will have the effect of vesting in or transferring to Customer rights in MSP's or its affiliates' or its or their suppliers' software, methods, know-how or other intellectual property, regardless of whether such intellectual property was created, used or first reduced to practice or tangible form in the course of performance of the Services, whether solely by MSP or jointly with Customer.

4.4 Mutual Confidentiality. This Section sets out the terms for identification of information which is considered confidential and proprietary by a party (the "**Discloser**"), and restrictions against use and disclosure of such Confidential Information after disclosure to the other party (the "**Recipient**").

(a) Definition. The term "**Confidential Information**" means all proprietary or confidential information that is disclosed to the Recipient by the Discloser, and includes, among other things (i) any and all information relating to products or services provided by a Discloser, its customer-related and financial information, source and executable code, flow charts, drawings, techniques, specifications, development and marketing plans, strategies, forecasts, and sales and marketing materials; (ii) the Product; and (iii) the terms of this Agreement. Confidential Information does not include information that Recipient can show: (A) was rightfully in Recipient's possession without any obligation of confidentiality before receipt from the Discloser; (B) is or becomes a matter of public knowledge through no fault of Recipient; (C) is rightfully received by Recipient from a third party without violation of a duty of confidentiality; or (D) is or was independently developed by or for Recipient.

(b) Disclosure Restrictions. Recipient may not disclose Confidential Information of Discloser to any third party without the prior written consent of Discloser.

(c) Proprietary Legends. Recipient may not remove, obscure, or alter any proprietary legend relating to the Discloser's rights on or from any form of Confidential Information of the Discloser, without the prior written consent of the Discloser, except as expressly authorized in an Order.

5. ALLOCATION OF RISK

5.1. Disclaimer of Damages. EXCEPT FOR VIOLATIONS OF SECTION 4, NEITHER PARTY, NOR ITS AFFILIATES AND LICENSORS, ARE LIABLE TO THE OTHER PARTY, OR ITS AFFILIATES OR LICENSORS, FOR ANY SPECIAL, INDIRECT, INCIDENTAL, PUNITIVE OR CONSEQUENTIAL DAMAGES ARISING OUT OF OR RELATING TO THIS AGREEMENT OR THE PRODUCT (INCLUDING WITHOUT LIMITATION LOST PROFITS, LOST COMPUTER USAGE, AND DAMAGE OR LOSS OF USE OF DATA), EVEN IF THAT PARTY HAS BEEN ADVISED OF THE POSSIBILITY OF SUCH DAMAGES, AND IRRESPECTIVE OF THE NEGLIGENCE OF EITHER PARTY OR WHETHER SUCH DAMAGES RESULT FROM A CLAIM ARISING UNDER TORT OR CONTRACT LAW.

5.2. Limitation of Liability. EXCEPT FOR VIOLATIONS OF SECTION 4, MSP'S LIABILITY FOR DIRECT DAMAGES ARISING OUT OF OR RELATING TO THIS AGREEMENT IS LIMITED TO THE GREATER OF 150% OF THE AMOUNT PAID OR 150% OF THE AMOUNT PAYABLE BY CUSTOMER FOR THE APPLICABLE PRODUCT DURING THE PRECEDING TWELVE MONTHS.

5.3. Injunctive Relief. Both parties acknowledge that their violation of Section 4 may cause the other party immediate and irreparable harm. In the event of such breach, the breaching party agrees that the other party may seek, in addition to any and all other remedies available at law, an injunction, specific performance or other appropriate relief.

6. SERVICES-SPECIFIC TERMS.

6.1. All Necessary Rights. If, as part of MSP's performance of Services, MSP is required to use, copy or modify any third-party system (hardware, software or other technology) provided or licensed to Customer, then prior to MSP's performance of such Services, Customer will acquire all rights necessary for MSP to perform such Services.

6.2. Limited Warranty. MSP warrants that the Services performed will be of a quality conforming to generally accepted practices that are standard within the software services industry for a period of ninety (90) days from completion of the Services under the applicable Statement of Work. Customer's exclusive remedy and MSP's entire liability under this warranty will be for MSP to re-perform any non-conforming portion of the Services within a reasonable period of time, or if MSP cannot remedy the breach during such time period then refund of 150% of the portion of the fee attributable to such non-conforming portion of the Services. This warranty will not apply to the extent Customer, its contractors or agents have modified any Deliverable, unless otherwise authorized by MSP in writing. THIS WARRANTY AND CONDITION IS IN LIEU OF ALL OTHER WARRANTIES AND CONDITIONS. THERE ARE NO OTHER EXPRESS OR IMPLIED WARRANTIES OR CONDITIONS, INCLUDING THE IMPLIED WARRANTY OF MERCHANTABILITY OR FITNESS FOR A PARTICULAR PURPOSE.

6.3. Independent Contractor. Nothing in this Agreement will be construed to make either party an employer, employee, agent or partner of the other, and this Agreement will not be construed to create rights, express or implied, on behalf of or for the use of any party other than MSP and Customer. All of the Services performed by MSP will be performed as an independent contractor. MSP will perform such Services under the general direction of Customer, but MSP will have sole discretion to determine the manner, method and means of performing such Services subject to the provisions of this Agreement and applicable Statement of Work. Neither party will have any authority to make any contract in the name of or otherwise to bind the other party. MSP will be responsible for and will pay all unemployment, social security and other payroll taxes, and all worker's compensation claims, worker's compensation insurance premiums and other insurance premiums, with respect to MSP and MSP's employees.

6.4. Mutual Non-Solicitation. During the term of this Agreement and for a period of six (6) months thereafter, neither party will solicit or hire as an employee or as an independent contractor, under any circumstances, any employees of the other party or its affiliates who, within one year prior to such solicitation or hiring: (a) directly

performed work under this Agreement, (b) had substantial contact with the hiring party in relation to this Agreement, or (c) the hiring party became aware of due to, or derived from information learned through the performance of this Agreement. The parties acknowledge and agree that a breach of this "Non-Solicitation" clause will not give rise to a right of termination of this Agreement. The breach of this "Non-Solicitation" clause shall entitle the non-breaching party to recover damages against the breaching party for any and all damages incurred as a result of the breach.

6.5. Mutual Indemnity. Each party will indemnify, defend and hold harmless the other party from all claims, liabilities or expenses for physical damage to real property or tangible personal property and bodily injury, including death, to the extent caused by the gross negligence or willful misconduct of the indemnifying party's employees or contractors arising out of this Agreement and while at the Customers premises. The foregoing indemnities are contingent upon the party seeking indemnity giving prompt written notice to the indemnifying party of any claim, demand or action, and cooperating with the indemnifying party in the defense or settlement of any such claim, demand or action. Customer shall keep all settlements, agreements or other related actions related to this Agreement strictly confidential.

7. Insurance. During the term of this Agreement and for a period of one (1) year after expiration or termination of this Agreement for any reason, MSP shall, at its own expense, maintain and carry insurance in full force and effect with financial sound and reputable insurers, that includes, but is not limited to, commercial general liability insurance with limits no less than $1,000,000 per occurrence and $2,000,000 in the aggregate which policy will include errors and omissions coverage. Upon Customer's request, MSP shall provide Customer with a certificate of insurance from MSP's insurer evidencing the insurance coverage specified in this Agreement. The certificate of insurance shall name Customer as an additional insured. MSP shall provide Customer with 30 days' advance written notice in the event of a cancellation or material change in MSP's insurance policy. Except where prohibited by law, MSP shall require its insurer to waive all rights of subrogation against Customer's insurers and Customer or the Indemnified Parties.

8. MISCELLANEOUS/OTHER PROVISIONS.

8.1. Severability. Should any provision of this Agreement be invalid, or unenforceable, the remainder of the provisions will remain in effect.

8.2. Notices. Unless otherwise provided, notices to either party will be in writing to the address indicated above, or as later amended, and deemed effective when received.

8.3. Compliance with Law. MSP is in compliance with and shall comply with all applicable laws, regulations, and ordinances. MSP has and shall maintain in effect all the licenses, permissions, authorizations, consents, and permits that it needs to carry out its obligations under this Agreement.

8.4. Verification. Upon MSP's written request, Customer will provide MSP with a certification signed by an officer of Customer verifying that Product is being used pursuant to the terms of this Agreement, including without limitation the licensed capacity of the Product. MSP may, at its expense, audit Customer's use of Product to confirm Customer's compliance with this Agreement. Any such audit will be conducted during regular business hours at Customer's facilities and will not unreasonably interfere with Customer's business activities. If an audit reveals that Customer has underpaid Fees to MSP, Customer will pay such underpaid Fees.

8.5. Assignment. Customer may not assign this Agreement or any rights granted in this Agreement to any third party, except with the prior written consent of MSP.

8.6. No Waivers. Failure of a party to require performance by the other party under this Agreement will not affect the right of such party to require performance in the future. A waiver by a party of any breach of any term of this Agreement will not be construed as a waiver of any continuing or succeeding breach.

8.7. Force Majeure. Any delay or failure of any party to perform any obligation under this Agreement caused by governmental restrictions, labor disputes, storms or natural disasters, emergency, or other causes beyond the reasonable control of the party, will not be deemed a breach of this Agreement. This provision does not apply to the payment of monies or any breach of Section 4.

8.8. Independent Contractors. The parties are independent contractors of each other, and no partnership or joint venture is intended or created by this Agreement.

8.9. Entire Agreement. This Agreement, together with each Statement of Work and Order, constitutes the entire agreement between Customer and MSP, and supersedes any prior or contemporaneous negotiations or agreements, whether oral or written, concerning this subject matter. This Agreement, and each Statement of Work and Order, may be modified only in a mutually signed writing between Customer and MSP. In the event of a conflict between this Agreement, any Statement of Work or an Order, the terms of the Order will control, followed by the terms of the applicable Statement of Work and then this Agreement.

8.10. Export Controls. Customer will cooperate with MSP as reasonably necessary to permit MSP to comply with the laws and regulations of the United States and all other relevant countries, relating to the control of exports ("**Export Laws**"). Customer may not import, nor export or re-export directly or indirectly, including via remote access, any part of the Product into or to any country for which a validated license is required for such import, export or re-export under applicable Export Laws, without first obtaining such a validated license.

8.11. Referencing. Customer agrees that MSP and its Affiliates may refer to Customer as a customer of MSP, both internally and in externally published media. Customer also agrees to instruct appropriate personnel within its organization that Customer has agreed to receive and participate in calls, from time to time, with potential customers of MSP who wish to evaluate the technical specifications of Product.

8.12. Governing Law. THIS AGREEMENT WILL BE GOVERNED BY THE SUBSTANTIVE LAWS OF THE STATE OF WISCONSIN. THE CHOICE OF LAW RULES OF ANY JURISDICTION AND THE UNITED NATIONS CONVENTION ON CONTRACTS FOR THE INTERNATIONAL SALE OF GOODS WILL NOT APPLY.

8.13. Survival. Sections 2, 4, 5, 6 and 7 will survive the termination or expiration of this Agreement.

8.14. Open Records Exception. The parties to this Agreement understand that Customer is subject to the Wisconsin public records law including, but not limited to, the provisions set forth in Chapter 19 of the Wisconsin Statutes, the Wisconsin open meetings law set forth under Wisconsin law including, but not limited to, Chapter 19 of the Wisconsin Statutes, as well as any other applicable laws requiring the Customer not to keep matters confidential and Customer's requirement to comply with said laws takes precedence over any conflicting provisions in the Agreement including, but not limited to, Section 4 and Sections 4.2, 4.4 and 7.11 that may be contained in this Agreement. Any obligation for confidentiality or non-disclosure or other related topics that is set forth upon Customer in this Agreement shall be complied with in good faith but is subject to and does not apply to any information, materials or documents that are required to be disclosed under any law including, but not limited to, the Wisconsin public records law set forth in Chapter 19 of the Wisconsin Statutes, the Wisconsin open meetings law set forth under Wisconsin law including, but not limited to, Chapter 19 of the Wisconsin Statutes, as well as any other applicable laws requiring the Customer not to keep matters confidential. The parties to this Agreement understand that Customer does not represent or guarantee that any information, materials or documents provided by MSP to Customer will be considered confidential or be subject to non-disclosure by Customer. The parties further understand that if Customer receives a good faith public records request or other valid request for any information, materials or documents that may be part of the Agreement or that has been provided by MSP, Customer may respond to such request without notice to or consent of MSP by disclosing any and all information, materials or documents. The parties understand that Customer shall be permitted to comply with any public records request or other legitimate request for any information, materials or documents and also be able to comply with the Wisconsin open meetings law as well as any other applicable law requiring Customer not to keep matters confidential without any liability to MSP under this Agreement. Under this Agreement MSP waives and releases Customer from any and all claims or liabilities relating to Customer's release of any information, materials or documents pursuant to any good faith request for any such information, materials or documents pursuant to any applicable law including, but not limited to, the Wisconsin public records law set forth in Chapter 19 of the Wisconsin Statutes, the Wisconsin open meetings law set forth under Wisconsin law including, but not limited to, Chapter 19 of the Wisconsin Statutes, as well as any other applicable laws requiring Customer not to keep matters confidential. Under this Agreement MSP further waives and releases Customer from any and all claims or liabilities in regards to Customer's requirements to comply with the Wisconsin public records law including, but not limited to, the Wisconsin public records law set forth in Chapter 19 of the Wisconsin Statutes, the Wisconsin open meetings law set forth under Wisconsin law including, but not limited to, Chapter 19 of the Wisconsin Statutes, as well as any other applicable laws requiring Customer not to keep matters confidential.

This Agreement is effective only upon execution by MSP and Customer. Each party hereto warrants and represents that this Agreement constitutes the legal, valid and binding obligation of such party as of the Effective Date.

PROS 4 TECHNOLOGY, INC.

Signature: _____

Name: _____

Title: _____

Date: _____

Village of Jackson

Signature: _____

Name: _____

Title: _____

Date: _____

EXHIBIT A

Statement of Work (SOW)

STATEMENT OF WORK No. 12062021voj

This Statement of Work ("**SOW No** 12062021voj") dated **April 1, 2022** ("**SOW Effective Date**") supplements the Master Customer Agreement effective as of April 1, 2022 (the "**Agreement**") by and between Pros 4 Technology, Inc. ("**MSP**") and Village of Jackson ("**Customer**"). This SOW 12062021voj consists of the terms below, the signature page, and any unique attachments to this SOW No. 12062021voj, which are all incorporated into the Agreement by this reference and are made a part of the Agreement by all intents and purposes.

Capitalized terms used herein, unless otherwise defined, will have the meanings given to them in the Agreement.

1. Services Description.

a. The Service is designed to provide pro-active support services that anticipate and prevent IT problems before they occur. The Service is built upon the successful installation and configuration of technologies that MSP's Helpdesk Team, Professional Services Team, and Network Operations Center (NOC) Team utilize to monitor and maintain critical technology systems.

2. Deliverables Description.

a. MSP will deliver the Service pursuant to the terms of this SOW. This SOW will serve to describe the on-going Services in detail

b. Help Desk Support and Network Monitoring
Remote Help Desk for Customer's IT Network will be provided through remote means by MSP to Customer during business hours 8:00 am to 5:00 pm. Access to the MSP Help Desk by authorized personnel is made by emailing help@pros4technology.com or calling 920-400-1279. Network Monitoring Services will be provided 24/7/365. All services qualifying under these conditions, as well as Services that fall outside this scope will fall under the provisions of Section 6 of this SOW. Hardware costs of any kind are not covered under the terms of this Agreement.

c. Support Tickets and Escalation
MSP will respond to Customer's Support Tickets under the provisions of attached Section 6.0, and with best efforts after hours or on holidays. Support Tickets begin at Level 1 and must be opened by the MSP Helpdesk Team which will also handle Level 2 Support Tickets. If the Helpdesk team is unable to remediate the issue, the Support Ticket is escalated to Level 3 at which time the MSP Professional Services Team will take over. Each Customer Issue will be assigned a Support Ticket number for tracking.

d. Hardware and Software Licensing and Support
MSP shall provide support of all hardware and systems specified in Section 6.0, provided that all Hardware is covered under a currently active Vendor Support Contract; or replaceable parts are readily available, and all Software is Genuine, Currently Licensed and Vendor-Supported. Should any hardware or systems fail to meet these provisions, they will be excluded from this Service Agreement. Should 3rd Party Vendor Support Charges be required in order to resolve any issues, these will be passed on to the Customer after first receiving the Customer's authorization to incur them.

e. Monitoring Services
MSP will provide on-going monitoring and security services of all critical devices as indicated in attached Section 6.0. MSP will document critical alerts, scans and event resolutions to Customer. Should a problem be discovered during monitoring, MSP shall make every attempt to rectify the condition in a timely manner through remote means.

f. Project Services Outside Standard Business Hours
Emergency project based services performed outside of the hours of 8:00 am – 5:00 pm Monday through Friday, excluding public holidays, shall be subject to provisions of Section 6.0.

3. Delivery

a. MSP will deliver the Service utilizing site evaluations, monitoring software installation, and finally server migration

4. **SOW Terms**

4.1 **Minimum Compliance Standards**

In order for Customer's existing environment to qualify for MSP Services, the following requirements must be met:

a. All Servers with Microsoft Windows Operating Systems must be running Windows 2016 R2 Server or later and have all of the latest Microsoft Service Packs and Critical Updates installed.
b. All Desktop PC's and Notebooks/Laptops with Microsoft Windows Operating Systems must be running Windows 10 Pro or later and have all of the latest Microsoft Service Packs and Critical Updates installed.
c. All Server and Desktop Software must be Genuine, Licensed and Vendor-Supported.
d. The environment must have a currently licensed, up-to-date and Vendor-Supported Antivirus Solution (Trend Micro Supported by WPPI) protecting all Servers, Desktops, Notebooks/Laptops, and Email.
e. The environment must have onsite and offsite monitored backup solution.

Costs required to bring Customer's environment to Minimum Standards are additional and outlined on the attached Proposal.

4.3 **Included Services**

Service rendered under this Agreement includes the following features:

a. Helpdesk Hours 8:00 am to 5:00 pm
b. Computer Monitoring
c. Virus Definition Updates
d. Microsoft Patch Management
e. On-Site and Remote Backup Monitoring
f. Offsite Data Only Backups up to 1 TB
g. Online Support Portal (Monitor Support Tickets)
h. Vendor Liaison
i. Onsite Monthly Visits to City Hall Location and Remote Sites as Needed
j. Includes Unlimited Hours Per Month for Doing Offsite Maintenance, Onsite Visit, and User Tickets
k. Includes Employee Security Training
l. Includes Dark Web Monitoring
m. Includes Cybereason EDR, NGAV, and SIEM Logging with SOC 24/7/365 Service Response
n. Door Access Control Cloud Access for Municipal Complex Location
o. Camera Maintenance for Municipal Complex and Public Works Locations

4.4 **Excluded Services**

Service rendered under this Agreement does not include:

a. Parts, equipment or software not covered by vendor/manufacturer warranty or support.
b. The cost of any parts, equipment, or shipping charges of any kind.
c. The cost of any Software, Licensing, or Software Renewal or Upgrade Fees of any kind.
d. The cost of any 3rd Party Vendor or Manufacturer Support or Incident Fees of any kind.
e. The cost to bring Customer's environment up to minimum standards required for Service Compliance.
f. Failure due to acts of God, building modifications, power failures or other adverse environmental conditions or factors.
g. Service and repair made necessary by the alteration or modification of equipment other than that authorized by MSP, including alterations, software installations or modifications of equipment made by Customer's employees or anyone other than MSP.
h. Maintenance of Application software packages, whether acquired from MSP or any other source unless as specified in Section 6.0.
i. Programming (modification of software code) and program (software) maintenance unless as specified in Section 6.0.
j. Travel Costs Outside of listed locations in this agreement.
k. Training Services of any kind outside of the Employee Security Training
l. POS Hardware will be serviced by 3rd Party Provider.

4.5 Travel costs to and from Customer's location of businesses for on-site is included within this agreement.

5.0 Service and Fee Schedule

Managed Services Fees for **the Service** will be a flat fee of $498.00 per month for Community Center, $833 per month for Public Works, $1,146.00 per month for Village Administration, $636 per month for WWTP, $1,034.00 per month for Police Department, and $529 Per Month for Fire Department. Invoices will be emailed to Customer monthly. Sales tax will be exempt. If Customer goes over 1 TB of included Offsite Backup Data space the Customer will be moved to the next level of needed storage space and will be billed additional amounts at current backup offsite backup plan rate. **The Service Start Date will begin on April 1, 2022.** The Service will be suspended if payment is not received within 30 days following date due.

5.1 Terms of Service

The parties agree that the Service will be provided for a term of **2 years** beginning on the start date (the "Initial Term"). After the Initial Term, the term will renew automatically for subsequent one year terms beginning on the day immediately following the end of the Initial Term (the "Renewal Terms") unless either party provides written notice to the other party not less than ninety (90) days prior to the end of the term of its intention not to allow for the automatic renewal. All terms and conditions shall remain the same for the Renewal Terms except that the fees for any Renewal Terms shall be set by MSP at MSP's current rates. The rate set by MSP at MSP's current rates for any Renewal Term may not exceed a 5% increase of the rates for the preceding term. MSP warrants its services as outlined in MSA section 6.2. Cancellation during any term will result in Customer paying MSP for the remaining balance of the term. Locations covered under this SOW are Jackson Community Center N165 W20330 Hickory Lane, Jackson Public Works, W194 W16660 Eagle Drive, Village of Jackson Administration, Police Department, and Fire Department at N168W19851 Main St, and Village of Jackson WWTP W194 N16658 Eagle Drive. Locations added in addition to this the SOW will be updated and Fees adjusted as needed to cover additional locations. If the number of computers required shall rise above 8 computers for Community Center, 11 Computer for Public Works, 7 Computers for Village Administration, 4 Computers for WWTP, 9 Computers for Fire Department, and 8 Computers for Police Department or Additional Servers Increase above 2 Physical Servers are added agrees the SOW shall be updated and/or revised by Pros4Technology, which shall include an increase in the monthly price.

5.2 ***It is understood that any and all Services requested by Customer that fall outside of the terms of this Agreement will be considered projects, and will be quoted and outline in a separate SOW.***

6.0 Supported Technologies and Personnel

Supported Equipment:

Up to 47 Managed Desktops/Laptops, 2 Pros 4 Technology Physical Servers.

Non-Supported Equipment:

1. Printer Repairs

Supported Applications:

1. Microsoft Office 2016 and Office 365
2. Microsoft Windows 10 Pro
3. Specialty Software (other Specialty Programs as Required for Employees to do their Job)

Installed
Virus Protection:
Cybereason NGAV

Backup Solutions:
Server Backups will be done to local NAS drive. Data Will Be Backed up Offsite. Workstations on Domain Will Be Backed up to Server.

6.1 Included MSP Services

Changes or additional services not listed at the signing of this Agreement will be quoted billed as a separate, individual service.

6.2 3rd Party Supported Providers

Customer authorizes MSP to contact the 3rd party support providers on behalf of Customer. MSP will provide a Vendor Authorization Letter to Customer as Needed. It is the Customer's responsibility to send this Letter to 3rd party vendor in order to authorize MSP to make changes on behalf of Customer as Needed.

This **SOW No. 12062021voj** is effective only upon execution by MSP and Customer. Each party hereto warrants and represents that this SOW, the Agreement constitute the legal, valid, and binding obligation of such party as of the SOW Effective Date.

Pros 4 Technology, Inc.	**Village of Jackson**
Signature: _____	Signature: _____
Name: _____	Name: _____
Title: _____	Title: _____
Date: _____	Date: _____

Taking the lead in Washington County.

MEMO

TO: Mike Schwab, Village President; Budget and Finance Committee

FROM: Jen Keller, Village Administrator

RE: Sale of Village Property – Financial Approvals

DATE: May 4, 2022

Description: To document and discuss the sale of the former Village Hall and Police Station, or specifically transaction of funds, Staff have prepared the following summary for review by the Budget and Finance Committee and Village Board:

1. As previously authorized by the Village Board, the Village owned property will be sold for $499,000. These funds will be receipted by Staff into the General Fund (100-00-48610-000-000 – Sale of Village Property) for date of sale May 13, 2022.
2. The cost for broker services of 6% or $29,940 will be paid as an expense from the General Fund (100-00-51300-310-000 Admin – Professional Services). This unbudgeted professional services expense will be justified via the revenue previously mentioned.
3. The repayment to the Water Utility in the amount of $17,600 for the purchase of a generator that was not transferred to their location as previously agreed upon. As such, funds will be debited from the General Fund (100-00-51610-320-000 Admin – Building Maintenance) and credited to the Water Utility Fund (200-00-52000-625-301 Water – Building / Grounds).
4. Use or obligation of the remaining funds is not necessary at this time as they are unrestricted for expending this year, or any following year via a transfer pursuant to guidance from the Village Auditor.

Potential Motion: Recommend Village Board approval of the receipt of funds to the General Fund for the Sale of Village Property and the repayment of $17,600 to the Water Utility.

Attachments:

1. Commercial Offer to Purchase – Walter Miller Family Investments Properties, LLC
2. Commercial Listing Contract – American Commercial Real Estate, LLC
3. Memo RE Replacing Village Hall Generator – Village Engineer Brian Kober

N168 W19851
Main Street
Jackson, WI 53037
Phone: 262-677-9001
Fax: 262-677-1710

Mailing Address:
P.O. Box 637

www.villageofjacksonwi.gov

WB-15 COMMERCIAL OFFER TO PURCHASE

LICENSEE DRAFTING THIS OFFER ON January 17, 2022 **[DATE] IS ~~(AGENT OF BUYER)~~ (AGENT OF SELLER/~~LISTING FIRM) (AGENT OF BUYER AND SELLER)~~ STRIKE THOSE NOT APPLICABLE**

The Buyer, Walter Miller Family Investment Properties, LLC, offers to purchase the Property known as N168 W20733 Main Street _____ [e.g., Street Address, Parcel Number(s), legal description, or insert additional description, if any, at lines 620-650, or attach as an addendum per line 676] in the Village of Jackson, County of Washington Wisconsin, on the following terms:

PURCHASE PRICE The purchase price is Four Hundred Ninety-Nine Thousand _____ Dollars ($499,000.00).

INCLUDED IN PURCHASE PRICE Included in purchase price is the Property, all Fixtures on the Property as of the date stated on line 1 of this Offer (unless excluded at lines 20-23), and the following additional items: None _____

All personal property included in purchase price will be transferred by bill of sale or N/A

NOTE: The terms of this Offer, not the listing contract or marketing materials, determine what items are included or not included.

NOT INCLUDED IN PURCHASE PRICE Not included in purchase price is Seller's personal property (unless included at lines 12-15) and the following: _____.

CAUTION: Identify trade fixtures owned by tenant, if applicable, and Fixtures that are on the Property (see lines 26-34) to be excluded by Seller or that are rented and will continue to be owned by the lessor.

"Fixture" is an item of property which is physically attached to or so closely associated with land or improvements so as to be treated as part of the real estate, including, without limitation, physically attached items not easily removable without damage to the premises, items specifically adapted to the premises and items customarily treated as fixtures, including, but not limited to, all: garden bulbs; plants; shrubs and trees; screen and storm doors and windows; electric lighting fixtures; window shades; curtain and traverse rods; blinds and shutters; central heating and cooling units and attached equipment; water heaters and treatment systems; sump pumps; attached or fitted floor coverings; awnings; attached antennas; garage door openers and remote controls; installed security systems; central vacuum systems and accessories; in-ground sprinkler systems and component parts; built-in appliances; ceiling fans; fences; storage buildings on permanent foundations and docks/piers on permanent foundations. A Fixture does not include trade fixtures owned by tenants of the Property.

CAUTION: Exclude Fixtures not owned by Seller such as rented fixtures. See lines 20-23.

BINDING ACCEPTANCE This Offer is binding upon both Parties only if a copy of the accepted Offer is delivered to Buyer on or before January 25, 2022. Seller may keep the Property on the market and accept secondary offers after binding acceptance of this Offer.

CAUTION: This Offer may be withdrawn prior to delivery of the accepted Offer.

ACCEPTANCE Acceptance occurs when all Buyers and Sellers have signed one copy of the Offer, or separate but identical copies of the Offer.

CAUTION: Deadlines in the Offer are commonly calculated from acceptance. Consider whether short term deadlines running from acceptance provide adequate time for both binding acceptance and performance.

CLOSING This transaction is to be closed on or before May 31, 2022 _____ at the place selected by Seller, unless otherwise agreed by the Parties in writing. If the date for closing falls on Saturday, Sunday, or a federal or a state holiday, the closing date shall be the next Business Day.

CAUTION: To reduce the risk of wire transfer fraud, any wiring instructions received should be independently verified by phone or in person with the title company, financial institution, or entity directing the transfer. The real estate licensees in this transaction are not responsible for the transmission or forwarding of any wiring or money transfer instructions.

EARNEST MONEY

■ ~~EARNEST MONEY of $ _____ accompanies this Offer.~~

If Offer was drafted by a licensee, receipt of the earnest money accompanying this Offer is acknowledged.

■ EARNEST MONEY of $ 10,000.00 _____ will be mailed, or commercially, electronically or personally delivered within 5 days ("5" if left blank) after acceptance.

All earnest money shall be delivered to and held by ~~(listing Firm) (drafting Firm)~~ (other identified as title company selected by Seller or Dempsey Law Trust Acct) STRIKE THOSE NOT APPLICABLE (listing Firm if none chosen; if no listing Firm, then drafting Firm; if no Firm then Seller).

CAUTION: If a Firm does not hold earnest money, an escrow agreement should be drafted by the Parties or an attorney as lines 64-84 do not apply. If someone other than Buyer pays earnest money, consider a special disbursement agreement.

■ THE BALANCE OF PURCHASE PRICE will be paid in cash or equivalent at closing unless otherwise agreed in writing.

■ DISBURSEMENT IF EARNEST MONEY HELD BY A FIRM: If negotiations do not result in an accepted offer and the earnest money is held by a Firm, the earnest money shall be promptly disbursed (after clearance from payer's depository institution if earnest money is paid by check) to the person(s) who paid the earnest money. At closing, earnest money shall be disbursed according to the closing statement. If this Offer does not close, the earnest money shall be disbursed according to a written disbursement agreement signed by all Parties to this Offer. If said disbursement agreement has not been delivered to the Firm holding the earnest money within 60 days after the date set for closing, that Firm may disburse the earnest money: (1) as directed by an attorney who has reviewed the transaction and does not represent Buyer or Seller; (2) into a court hearing a lawsuit involving the earnest money and all Parties to this Offer; (3) as directed by court order; (4) upon authorization granted within this Offer; or (5) any other disbursement required or allowed by law. The Firm may retain legal services to direct disbursement per (1) or to file an interpleader action per (2) and the Firm may deduct from the earnest money any costs and reasonable attorneys' fees, not to exceed $250, prior to disbursement.

■ LEGAL RIGHTS/ACTION: The Firm's disbursement of earnest money does not determine the legal rights of the Parties in relation to this Offer. Buyer's or Seller's legal right to earnest money cannot be determined by the Firm holding the earnest money. At least 30 days prior to disbursement per (1), (4) or (5) above, where the Firm has knowledge that either Party disagrees with the disbursement, the Firm shall send Buyer and Seller written notice of the intent to disburse by certified mail. If Buyer or Seller disagrees with the Firm's proposed disbursement, a lawsuit may be filed to obtain a court order regarding disbursement. Small Claims Court has jurisdiction over all earnest money disputes arising out of the sale of residential property with one-to-four dwelling units. Buyer and Seller should consider consulting attorneys regarding their legal rights under this Offer in case of a dispute. Both Parties agree to hold the Firm harmless from any liability for good faith disbursement of earnest money in accordance with this Offer or applicable Department of Safety and Professional Services regulations concerning earnest money. See Wis. Admin. Code Ch. REEB 18.

TIME IS OF THE ESSENCE "Time is of the Essence" as to: (1) earnest money payment(s); (2) binding acceptance; (3) occupancy; (4) date of closing; (5) contingency Deadlines STRIKE AS APPLICABLE and all other dates and Deadlines in this Offer except: none. If "Time is of the Essence" applies to a date or Deadline, failure to perform by the exact date or Deadline is a breach of contract. If "Time is of the Essence" does not apply to a date or Deadline, then performance within a reasonable time of the date or Deadline is allowed before a breach occurs.

~~**PROPERTY CONDITION REPRESENTATIONS** Seller represents to Buyer that as of the date of acceptance Seller has no notice or knowledge of Conditions Affecting the Property or Transaction (lines 104-173) other than those identified in Seller's disclosure report dated _____ and a Real Estate Condition Report, if applicable, dated _____, which was/were received by Buyer prior to Buyer signing this Offer and which is/are made a part of this offer by reference COMPLETE DATE OR STRIKE AS APPLICABLE and~~ Buyer, pursuant to Wis. Stat § 709.08, hereby waives any right Buyer may have to receive a real estate condition report that may be required under Wis. Stat. Ch. 709.

_____ INSERT CONDITIONS NOT ALREADY INCLUDED IN THE DISCLOSURE OR CONDITION REPORT(S).

CAUTION: If the Property includes 1-4 dwelling units, a Real Estate Condition Report containing the disclosures provided in Wis. Stat. § 709.03 may be required. Excluded from this requirement are sales of property that has never been inhabited, sales exempt from the real estate transfer fee, and sales by certain court-appointed fiduciaries, for example, personal representatives, who have never occupied the Property. Buyer may have rescission rights per Wis. Stat. § 709.05.

"Conditions Affecting the Property or Transaction" are defined to include:

a. Defects in the structure or structural components on the Property, e.g. roof, foundation (including cracks, seepage, and bulges), basement or other walls.

b. Defects in mechanical systems, e.g. HVAC (including the air filters and humidifiers), electrical, plumbing, septic, wells, fire safety, security or lighting.

c. Defects in a well on the Property or in a well that serves the Property, including unsafe well water, a joint well serving the Property or any Defect related to a joint well serving the Property.

d. Water quality issues caused by unsafe concentrations of or unsafe conditions relating to lead.

e. Defects in septic system or other private sanitary disposal system on or serving the Property or any out-of-service septic system serving the Property not closed or abandoned according to applicable regulations.

f. Underground or aboveground storage tanks presently or previously on the Property for storage of flammable or combustible liquids, including but not limited to gasoline and heating oil, or any Defects in such tanks presently or previously on the Property; LP tanks on the Property or any defects in such LP tanks.

g. Defect or contamination caused by unsafe concentrations of, or unsafe conditions relating to, lead in paint, lead in soil,

presence of asbestos or asbestos-containing materials, radon, radium in water supplies, mold, pesticides or other potentially hazardous or toxic substances on the Property.

h. Manufacture of or spillage of methamphetamine (meth) or other hazardous or toxic substances on the Property.

i. Zoning or building code violations, any land division involving the Property for which required state or local permits had not been obtained, nonconforming structures or uses, conservation easements.

j. Special purpose district, such as a drainage district, lake district, sanitary district or sewer district, that has the authority to impose assessments against the real property located within the district.

k. Proposed, planned or commenced construction of public improvements which may result in special assessments or otherwise materially affect the Property or the present use of the Property.

l. Federal, state or local regulations requiring repairs, alterations or corrections of an existing condition, such as orders to correct building code violations.

m. Flooding, standing water, drainage problems or other water problems on or affecting the Property.

n. Material damage from fire, wind, floods, earthquake, expansive soils, erosion or landslides.

o. Nearby airports, freeways, railroads or landfills, or significant odor, noise, water intrusion or other irritants emanating from neighboring property.

p. Current or previous termite, powder post beetle, or carpenter ant infestations or Defects caused by animal, reptile, or insect infestations.

q. Property or portion of the Property in a floodplain, wetland or shoreland zoning area under local, state or federal regulations.

r. Property is subject to a mitigation plan required under administrative rules of the department of Natural Resources related to county shoreland zoning ordinances, which obligates the owner of the Property to establish or maintain certain measures related to shoreland conditions and which is enforceable by the county.

s. Nonowners having rights to use part of the Property, other than public rights-of-way, including, but not limited to, private rights-of-way and private easements, other than recorded utility easements; lack of legal access or access restrictions; restrictive covenants and deed restrictions; shared fences, walls, wells, driveways, signage or other shared usages; or leased parking.

t. Boundary or lot line disputes, encroachments, or encumbrances affecting the Property.

u. High voltage electric (100 KV or greater) or steel natural gas transmission lines located on but not directly serving the Property.

v. Structure on the Property designated as a historic building, all or any part of the Property located in a historic district, or burial sites or archeological artifacts on the Property.

w. All or part of the land has been assessed as agricultural land, the owner has been assessed a use-value conversion charge or the payment of a use-value conversion charge has been deferred.

x. All or part of the Property is subject to, enrolled in or in violation of a certified farmland preservation zoning district or a farmland preservation agreement, or a Forest Crop, Managed Forest Law (see disclosure requirements in Wis. Stat. § 710.12), Conservation Reserve or a comparable program.

y. A pier is attached to the Property that is not in compliance with state or local pier regulations, a written agreement affecting riparian rights related to the Property; or the bed of the abutting navigable waterway is owned by a hydroelectric operator.

z. A dam is totally or partially located on the Property; or an ownership interest in a dam not located on the Property will be transferred with the Property because the dam is owned collectively by a homeowners' association, lake district, or similar group of which the Property owner is a member.

aa. Government investigation or private assessment/audit of environmental matters conducted.

bb. Presence of or a Defect caused by unsafe concentrations of, unsafe conditions relating to, or the storage of hazardous or toxic substances on neighboring properties.

cc. Owner's receipt of notice of property tax increases, other than normal annual increases, or notice or knowledge of a pending property reassessment, remodeling that may increase the property's assessed value, or pending special assessments.

dd. Agreements that bind subsequent owners of the property, such as a lease agreement or an extension of credit from an electric cooperative.

ee. Remodeling, replacements, or repairs affecting the Property's structure or mechanical systems that were done or additions to the Property that were made during the owner's period of ownership without the required permits.

ff. Rented items located on the Property or items affixed to or closely associated with the Property.

gg. Owner is a foreign person as defined in the Foreign Investment in Real Property Tax Act in 26 IRC § 1445(f).

hh. Other Defects affecting the Property, including, without limitation, drainage easement or grading problems; or excessive sliding, settling, earth movement or upheavals.

PROPOSED USE CONTINGENCIES: This Offer is contingent upon Buyer obtaining, at Buyer's expense, the reports or documentation required by any optional provisions checked on lines 185-197 below. The optional provisions checked on lines 185-197 shall be deemed satisfied unless Buyer, within N/A days ("30" if left blank) after acceptance, delivers: (1) written notice to Seller specifying those optional provisions checked below that cannot be satisfied and (2) written evidence substantiating why each specific provision referred to in Buyer's notice cannot be satisfied. Upon delivery of Buyer's notice, this Offer shall be null and void. Seller agrees to cooperate with Buyer as necessary to satisfy the contingency provisions checked at lines 185-197.

Proposed Use: Buyer is purchasing the Property for the purpose of: N/A

_____

_____ **[insert proposed use and type and size of building, if applicable; e.g. restaurant/tavern with capacity of 350 and 3 second floor dwelling units].**

N/A **ZONING:** Verification of zoning and that the Property's zoning allows Buyer's proposed use described at lines 181-183.

N/A **EASEMENTS AND RESTRICTIONS:** Copies of all public and private easements, covenants and restrictions affecting the Property and a written determination by a qualified independent third party that none of these prohibit or significantly delay or increase the costs of the proposed use or development identified at lines 181-183.

N/A **APPROVALS:** All applicable governmental permits, approvals and licenses, as necessary and appropriate, or the final discretionary action by the granting authority prior to the issuance of such permits, approvals and licenses, for the following items related to Buyer's proposed use: _____

_____ or delivering written notice to Seller if the item(s) cannot be obtained or can only be obtained subject to conditions which significantly increase the cost of Buyer's proposed use described at lines 181-183.

N/A **ACCESS TO PROPERTY:** Written verification that there is legal vehicular access to the Property from public roads.

N/A **LAND USE APPROVAL/PERMITS:** This Offer is contingent upon (Buyer)(Seller) STRIKE ONE ("Buyer" if neither stricken) obtaining the following, including all costs: a CHECK ALL THAT APPLY: ☐ rezoning; ☐ conditional use permit; ☐ variance; ☐ other _____ for the Property for its proposed use described at lines 181-183. Seller agrees to cooperate with Buyer as necessary to satisfy this contingency. Buyer shall deliver, within _____ days of acceptance, written notice to Seller if any item cannot be obtained, in which case this Offer shall be null and void.

N/A **MAP OF THE PROPERTY:** This Offer is contingent upon (Buyer obtaining) (Seller providing) STRIKE ONE ("Seller providing" if neither is stricken) a _____ survey (ALTA/NSPS Land Title Survey if survey type is not specified) dated subsequent to the date of acceptance of this Offer and prepared by a registered land surveyor, within _____ days ("30" if left blank) after acceptance, at (Buyer's) (Seller's) STRIKE ONE ("Seller's" if neither is stricken) expense. The map shall show minimum of _____ acres, maximum of _____ acres, the legal description of the Property, the Property's boundaries and dimensions, visible encroachments upon the Property, the location of improvements, if any, and: _____

_____ ;

STRIKE AND COMPLETE AS APPLICABLE Additional map features which may be added include, but are not limited to: staking of all corners of the Property; identifying dedicated and apparent streets; lot dimensions; total acreage or square footage; utility installations; easements or rights-of-way. Such survey shall be in satisfactory form and accompanied by any required surveyor's certificate sufficient to enable Buyer to obtain removal of the standard survey exception(s) on the title policy.

CAUTION: Consider the cost and the need for map features before selecting them. Also consider the time required to obtain the map when setting the deadline.

This contingency shall be deemed satisfied unless Buyer, within 5 days after the deadline for delivery of said map, delivers to Seller a copy of the map and a written notice which identifies: (1) a significant encroachment; (2) information materially inconsistent with prior representations; (3) failure to meet requirements stated within this contingency; or (4) the existence of conditions that would prohibit the Buyer's intended use of the Property described at lines 181-183. Upon delivery of Buyer's notice, this Offer shall be null and void. Once the deadline for delivery has passed, if Seller was responsible to provide the map and failed to timely deliver the map to Buyer, Buyer may terminate this Offer if Buyer delivers a written notice of termination to Seller prior to Buyer's Actual Receipt of said map from Seller.

N/A **DOCUMENT REVIEW CONTINGENCY:** This Offer is contingent upon Seller delivering the following documents to Buyer within _____ days ("30" if left blank) after acceptance: CHECK THOSE THAT APPLY; STRIKE AS APPROPRIATE

☐ Documents evidencing the sale of the Property has been properly authorized, if Seller is a business entity

☐ A complete inventory of all furniture, fixtures, equipment and other personal property included in this transaction which is consistent with representations made prior to and in this Offer.

☐ Uniform Commercial Code lien search as to the personal property included in the purchase price, showing the Property to be free and clear of all liens, other than liens to be released prior to or at closing.

☐ Rent roll.

☐ Other _____

_____

~~Additional items which may be added include, but are not limited to: building, construction or component warranties, previous environmental site assessments, surveys, title commitments and policies, maintenance agreements, other contracts relating to the Property, existing permits and licenses, recent financial operating statements, current and future rental agreements, notices of termination and non-renewal, and assessment notices.~~

~~All documents Seller delivers to Buyer shall be true, accurate, current and complete. Buyer shall keep all such documents confidential and disclose them to third parties only to the extent necessary to implement other provisions of this Offer. Buyer shall return all documents (originals and any reproductions) to Seller if this Offer is terminated.~~

■ CONTINGENCY SATISFACTION: This contingency shall be deemed satisfied unless Buyer, within_____days ("5" if left blank) after the deadline for delivery of the documents, delivers to Seller a written notice indicating this contingency has not been satisfied. Such notice shall identify which document(s) have not been timely delivered or do not meet the standard set forth for the document(s). Upon delivery of such notice, this Offer shall be null and void.

N/A **~~ENVIRONMENTAL EVALUATION CONTINGENCY:~~** ~~This Offer is contingent upon a qualified independent environmental consultant of Buyer's choice conducting an Environmental Site Assessment of the Property (see lines 274-291), at (Buyer's) (Seller's) expense STRIKE ONE ("Buyer's" if neither is stricken), which discloses no Defects.~~

~~NOTE: "Defect" as defined on lines 523-525 means a condition that would have a significant adverse effect on the value of the Property; that would significantly impair the health or safety of future occupants of the Property; or that if not repaired, removed or replaced would significantly shorten or adversely affect the expected normal life of the premises.~~

~~For the purpose of this contingency, a Defect is defined to also include a material violation of environmental laws, a material contingent liability affecting the Property arising under any environmental laws, the presence of an underground storage tank(s) or material levels of hazardous substances either on the Property or presenting a significant risk of contaminating the Property due to future migration from other properties. Defects do not include conditions the nature and extent of which Buyer had actual knowledge or written notice before signing the Offer.~~

■ ~~CONTINGENCY SATISFACTION: This contingency shall be deemed satisfied unless Buyer, within _____ days ("30" if left blank) after acceptance, delivers to Seller a copy of the Environmental Site Assessment report and a written notice listing the Defect(s) identified in the Environmental Site Assessment report to which Buyer objects (Notice of Defects).~~

~~CAUTION: A proposed amendment is not a Notice of Defects and will not satisfy this notice requirement.~~

■ ~~RIGHT TO CURE: Seller (shall) (shall not) STRIKE ONE ("shall" if neither is stricken) have a right to cure the Defects. If Seller has the right to cure, Seller may satisfy this contingency by:~~

~~(1) delivering written notice to Buyer within _____ ("10" if left blank) days after Buyer's delivery of the Notice of Defects stating Seller's election to cure Defects;~~

~~(2) curing the Defects in a good and workmanlike manner; and~~

~~(3) delivering to Buyer a written report detailing the work done no later than three days prior to closing.~~

~~This Offer shall be null and void if Buyer makes timely delivery of the Notice of Defects and written Environmental Site Assessment report and:~~

~~(1) Seller does not have a right to cure; or~~

~~(2) Seller has a right to cure but:~~

~~(a) Seller delivers written notice that Seller will not cure; or~~

~~(b) Seller does not timely deliver the written notice of election to cure.~~

■ ~~ENVIRONMENTAL SITE ASSESSMENT: An "Environmental Site Assessment" (also known as a "Phase I Site Assessment") may include, but is not limited to: (1) an inspection of the Property; (2) a review of the ownership and use history of the Property, including a search of title records showing private ownership of the Property for a period of 80 years prior to the visual inspection; (3) a review of historic and recent aerial photographs of the Property, if available; (4) a review of environmental licenses, permits or orders issued with respect to the Property (5) an evaluation of results of any environmental sampling and analysis that has been conducted on the Property; and (6) a review to determine if the Property is listed in any of the written compilations of sites or facilities considered to pose a threat to human health or the environment including the National Priorities List, the Department of Nature Resources' (DNR) Registry of Waste Disposal Sites, the DNR's Contaminated Lands Environmental Action Network, and the DNR's Remediation and Redevelopment (RR) Sites Map including the Geographical Information System (GIS) Registry and related resources. Any Environmental Site Assessment performed under this Offer shall comply with generally recognized industry standards (e.g. current American Society of Testing and Materials "Standard Practice for Environmental Site Assessments"), and state and federal guidelines, as applicable.~~

~~CAUTION: Unless otherwise agreed an Environmental Site Assessment does not include subsurface testing of the soil or groundwater or other testing of the Property for environmental pollution. If further investigation is required, insert provisions for a Phase II Site Assessment (collection and analysis of samples), Phase III Environmental Site Assessment (evaluation of remediation alternatives) or other site evaluation at lines 620-650 or attach as an addendum per line 676.~~

INSPECTIONS AND TESTING Buyer may only conduct inspections or tests if specific contingencies are included as a part of this Offer. An "inspection" is defined as an observation of the Property, which does not include an appraisal or testing of the Property, other than testing for leaking carbon monoxide, or testing for leaking LP gas or natural gas used as a fuel source, which are hereby authorized. A "test" is defined as the taking of samples of materials such as soils, water, air or

building materials from the Property for laboratory or other analysis of these materials. Seller agrees to allow Buyer's inspectors, testers and appraisers reasonable access to the Property upon advance notice, if necessary, to satisfy the contingencies in this Offer. Buyer or licensees or both may be present at all inspections and testing. Except as otherwise provided, Seller's authorization for inspections does not authorize Buyer to conduct testing of the Property.

NOTE: Any contingency authorizing testing should specify the areas of the Property to be tested, the purpose of the test (e.g., to determine if environmental contamination is present), any limitations on Buyer's testing and any other material terms of the contingency.

Buyer agrees to promptly restore the Property to its original condition after Buyer's inspections and testing are completed unless otherwise agreed to with Seller. Buyer agrees to promptly provide copies of all inspection and testing reports to Seller. Seller acknowledges that certain inspections or tests may detect environmental pollution which may be required to be reported to the Wisconsin Department of Natural Resources.

~~[N/A] **INSPECTION CONTINGENCY:** This contingency only authorizes inspections, not testing (see lines 292-306).~~

~~(1) This Offer is contingent upon a qualified independent inspector(s) conducting an inspection(s) of the Property which discloses no Defects.~~

~~(2) This Offer is further contingent upon a qualified independent inspector or independent qualified third party performing an an inspection of _____~~

~~_____~~

~~(list any Property feature(s) to be separately inspected, e.g., dumpsite, etc.) which discloses no Defects.~~

~~(3) Buyer may have follow-up inspections recommended in a written report resulting from an authorized inspection, provided they occur prior to the Deadline specified at line 320. Each inspection shall be performed by a qualified independent inspector or independent qualified third party.~~

~~Buyer shall order the inspection(s) and be responsible for all costs of inspection(s).~~

~~**CAUTION: Buyer should provide sufficient time for the primary inspection and/or any specialized inspection(s), as well as any follow-up inspection(s).**~~

~~This contingency shall be deemed satisfied unless Buyer, within _____ days ("20" if left blank) after acceptance, delivers to Seller a copy of the inspection report(s) dated after the date on line 1 of this Offer and a written notice listing the Defect(s) identified in the inspection report(s) to which Buyer objects (Notice of Defects).~~

~~**CAUTION: A proposed amendment is not a Notice of Defects and will not satisfy this notice requirement.**~~

~~For the purpose of this contingency, Defects do not include conditions the nature and extent of which Buyer had actual knowledge or written notice before signing the Offer.~~

~~**NOTE: "Defect" as defined on lines 523-525 means a condition that would have a significant adverse effect on the value of the Property; that would significantly impair the health or safety of future occupants of the Property; or that if not repaired, removed or replaced would significantly shorten or adversely affect the expected normal life of the premises.**~~

■ ~~**RIGHT TO CURE:** Seller (shall)(shall not) [STRIKE ONE] ("shall" if neither is stricken) have the right to cure the Defects. If Seller has the right to cure, Seller may satisfy this contingency by:~~

~~(1) delivering written notice to Buyer within 10 days of Buyer's delivery of the Notice of Defects stating Seller's election to cure Defects;~~

~~(2) curing the Defects in a good and workmanlike manner; and~~

~~(3) delivering to Buyer a written report detailing the work done no later than three days prior to closing.~~

~~This Offer shall be null and void if Buyer makes timely delivery of the Notice of Defects and written inspection report(s) and:~~

~~(1) Seller does not have the right to cure; or~~

~~(2) Seller has the right to cure but:~~

~~(a) Seller delivers written notice that Seller will not cure; or~~

~~(b) Seller does not timely deliver the written notice of election to cure.~~

IF LINE 342 IS NOT MARKED OR IS MARKED N/A LINES 392-403 APPLY.

[X] **FINANCING COMMITMENT CONTINGENCY:** This Offer is contingent upon Buyer being able to obtain a written conventional [loan type or specific lender, if any] first mortgage loan commitment as described below, within 45 days after acceptance of this Offer. The financing selected shall be in an amount of not less than $399,200.00 for a term of not less than 5 years, amortized over not less than 20 years. Initial monthly payments of principal and interest shall not exceed $ 2,634.54 . Buyer acknowledges that lender's required monthly payments may also include 1/12th of the estimated net annual real estate taxes, hazard insurance premiums, and private mortgage insurance premiums. The mortgage shall not include a prepayment premium. Buyer agrees to pay discount points in an amount not to exceed _____ % ("0" if left blank) of the loan. If Buyer is using multiple loan sources or obtaining a construction loan or land contract financing, describe at lines 620-650 or in an addendum attached per line 676. Buyer agrees to pay all customary loan and closing costs, wire fees, and loan origination fees, to promptly apply for a mortgage loan, and to provide evidence of application promptly upon request of Seller. Seller agrees to allow lender's appraiser access to the Property.

■ LOAN AMOUNT ADJUSTMENT: If the purchase price under this Offer is modified, any financed amount, unless otherwise provided, shall be adjusted to the same percentage of the purchase price as in this contingency and the monthly payments shall be adjusted as necessary to maintain the term and amortization stated above.

CHECK AND COMPLETE APPLICABLE FINANCING PROVISION AT LINE 358 or 359.

☒ **FIXED RATE FINANCING:** The annual rate of interest shall not exceed 5.000 %.

☐ **ADJUSTABLE RATE FINANCING:** The initial interest rate shall not exceed _____%. The initial interest rate shall be fixed for _____ months, at which time the interest rate may be increased not more than _____% ("2" if left blank) at the first adjustment and by not more than _____% ("1" if left blank) at each subsequent adjustment. The maximum interest rate during the mortgage term shall not exceed the initial interest rate plus _____% ("6" if left blank). Monthly payments of principal and interest may be adjusted to reflect interest changes.

NOTE: If purchase is conditioned on Buyer obtaining financing for operations or development consider adding a contingency for that purpose.

■ SATISFACTION OF FINANCING COMMITMENT CONTINGENCY: If Buyer qualifies for the loan described in this Offer or another loan acceptable to Buyer, Buyer agrees to deliver to Seller a copy of a written loan commitment. This contingency shall be satisfied if, after Buyer's review, Buyer delivers to Seller a copy of a written loan commitment (even if subject to conditions) that is:

(1) signed by Buyer; or

(2) accompanied by Buyer's written direction for delivery.

Delivery of a loan commitment by Buyer's lender or delivery accompanied by a notice of unacceptability shall not satisfy this contingency.

CAUTION: The delivered loan commitment may contain conditions Buyer must yet satisfy to obligate the lender to provide the loan. Buyer understands delivery of a loan commitment removes the Financing Commitment Contingency from the Offer and shifts the risk to Buyer if the loan is not funded.

■ SELLER TERMINATION RIGHTS: If Buyer does not deliver a loan commitment on or before the Deadline on line 344. Seller may terminate this Offer if Seller delivers a written notice of termination to Buyer prior to Seller's Actual Receipt of written loan commitment from Buyer.

■ FINANCING COMMITMENT UNAVAILABILITY: If a financing commitment is not available on the terms stated in this Offer (and Buyer has not already delivered an acceptable loan commitment for other financing to Seller), Buyer shall promptly deliver written notice to Seller of same including copies of lender(s)' rejection letter(s) or other evidence of unavailability.

~~N/A **SELLER FINANCING:** Seller shall have 10 days after the earlier of:~~

~~(1) Buyer delivery of written notice of evidence of unavailability as noted in lines 380-383; or~~

~~(2) the Deadline for delivery of the loan commitment set on line 344~~

~~to deliver to Buyer written notice of Seller's decision to finance this transaction with a note and mortgage under the same terms set forth in this Offer, and this Offer shall remain in full force and effect, with the time for closing extended accordingly. If Seller's notice is not timely given, the option for Seller to provide financing shall be considered waived. Buyer agrees to cooperate with and authorizes Seller to obtain any credit information reasonably appropriate to determine Buyer's credit worthiness for Seller financing.~~

~~**IF THIS OFFER IS NOT CONTINGENT ON FINANCING COMMITMENT** Within _____ days ("7" if left blank) after acceptance, Buyer shall deliver to Seller either:~~

~~(1) reasonable written verification from a financial institution or third party in control of Buyer's funds that Buyer has, at the time of verification, sufficient funds to close; or~~

~~(2) _____~~

~~_____ [Specify documentation Buyer agrees to deliver to Seller].~~

~~If such written verification or documentation is not delivered, Seller has the right to terminate this Offer by delivering written notice to Buyer prior to Seller's Actual Receipt of a copy of Buyer's written verification. Buyer may or may not obtain mortgage financing but does not need the protection of a financing commitment contingency. Seller agrees to allow Buyer's appraiser access to the Property for purposes of an appraisal. Buyer understands and agrees that this Offer is not subject to the appraisal meeting any particular value, unless this Offer is subject to an appraisal contingency, nor does the right of access for an appraisal constitute a financing commitment contingency.~~

~~N/A **APPRAISAL CONTINGENCY:** This Offer is contingent upon Buyer or Buyer's lender having the Property appraised at Buyer's expense by a Wisconsin licensed or certified independent appraiser who issues an appraisal report dated subsequent to the date stated on line 1 of this Offer, indicating an appraised value for the Property equal to or greater than the agreed upon purchase price.~~

~~This contingency shall be deemed satisfied unless Buyer, within _____ days after acceptance, delivers to Seller a copy of the appraisal report indicating an appraised value less than the agreed upon purchase price, and a written notice objecting to the appraised value.~~

~~■ **RIGHT TO CURE:** Seller (shall)(shall not) **STRIKE ONE** ("shall" if neither is stricken) have the right to cure.~~

~~If Seller has the right to cure, Seller may satisfy this contingency by delivering written notice to Buyer adjusting the purchase price to the value shown on the appraisal report within _____ days ("5" if left blank) after Buyer's delivery of the appraisal report and the notice objecting to the appraised value. Seller and Buyer agree to promptly execute an amendment initiated by either Party after delivery of Seller's notice, solely to reflect the adjusted purchase price.~~

~~This Offer shall be null and void if Buyer makes timely delivery of the notice objecting to appraised value and the written appraisal report and:~~

~~(1) Seller does not have the right to cure; or~~

~~(2) Seller has the right to cure but:~~

~~(a) Seller delivers written notice that Seller will not adjust the purchase price; or~~

~~(b) Seller does not timely deliver the written notice adjusting the purchase price to the value shown on the appraisal report.~~

N/A ~~**SECONDARY OFFER:** This Offer is secondary to a prior accepted offer. This Offer shall become primary upon delivery of written notice to Buyer that this Offer is primary. Unless otherwise provided, Seller is not obligated to give Buyer notice prior to any Deadline, nor is any particular secondary buyer given the right to be made primary ahead of other secondary buyers. Buyer may declare this Offer null and void by delivering written notice of withdrawal to Seller prior to delivery of Seller's notice that this Offer is primary. Buyer may not deliver notice of withdrawal earlier than _____ days ("7" if left blank) after acceptance of this Offer. All other Offer Deadlines that run from acceptance shall run from the time this Offer becomes primary.~~

CLOSING PRORATIONS The following items, if applicable, shall be prorated at closing, based upon date of closing values: real estate taxes, rents, prepaid insurance (if assumed), private and municipal charges, property owners or homeowners association assessments, fuel and other common _____.

CAUTION: Provide basis for utility charges, fuel or other prorations if date of closing value will not be used.

Any income, taxes or expenses shall accrue to Seller, and be prorated at closing, through the day prior to closing.

Real estate taxes shall be prorated at closing based on CHECK BOX FOR APPLICABLE PRORATION FORMULA:

[ ] The net general real estate taxes for the preceding year, or the current year if available (Net general real estate taxes are defined as general property taxes after state tax credits and lottery credits are deducted). NOTE: THIS CHOICE APPLIES IF NO BOX IS CHECKED.

[ ] Current assessment times current mill rate (current means as of the date of closing).

[ ] Sale price, multiplied by the municipality area-wide percent of fair market value used by the assessor in the prior year, or current year if known, multiplied by current mill rate (current means as of the date of closing).

[X] All real estate taxes shall be paid by Buyer without proration.

CAUTION: Buyer is informed that the actual real estate taxes for the year of closing and subsequent years may be substantially different than the amount used for proration especially in transactions involving new construction, extensive rehabilitation, remodeling or area-wide re-assessment. Buyer is encouraged to contact the local assessor regarding possible tax changes.

[ ] Buyer and Seller agree to re-prorate the real estate taxes, through the day prior to closing based upon the taxes on the actual tax bill for the year of closing, with Buyer and Seller each owing his or her pro-rata share. Buyer shall, within 5 days of receipt, forward a copy of the bill to the forwarding address Seller agrees to provide at closing. The Parties shall re-prorate within 30 days of Buyer's receipt of the actual tax bill. Buyer and Seller agree this is a post-closing obligation and is the responsibility of the Parties to complete, not the responsibility of the real estate Firms in this transaction.

TITLE EVIDENCE

■ CONVEYANCE OF TITLE: **Upon payment of the purchase price, Seller shall convey the Property by warranty deed (trustee's deed if Seller is a trust, personal representative's deed if Seller is an estate or other conveyance as provided herein)**, free and clear of all liens and encumbrances, except: municipal and zoning ordinances and agreements entered under them, recorded easements for the distribution of utility and municipal services, recorded building and use restrictions and covenants, present uses of the Property in violation of the foregoing disclosed in Seller's disclosure report, and Real Estate Condition Report, if applicable, and in this Offer, general taxes levied in the year of closing and _____ (insert other allowable exceptions from title, if any) that constitutes merchantable title for purposes of this transaction. Seller, at Seller's cost, shall complete and execute the documents necessary to record the conveyance and pay the Wisconsin Real Estate Transfer Fee.

WARNING: Municipal and zoning ordinances, recorded building and use restrictions, covenants and easements may prohibit certain improvements or uses and therefore should be reviewed, particularly if Buyer contemplates making improvements to Property or a use other than the current use.

■ TITLE EVIDENCE: Seller shall give evidence of title in the form of an owner's policy of title insurance in the amount of the purchase price on a current ALTA form issued by an insurer licensed to write title insurance in Wisconsin. Seller shall pay all costs of providing title evidence to Buyer. Buyer shall pay the costs of providing the title evidence required by Buyer's lender and recording the deed or other conveyance.

■ GAP ENDORSEMENT: Seller shall provide a "gap" endorsement or equivalent gap coverage at (Seller's)~~(Buyer's)~~ **STRIKE ONE** ("Seller's" if neither stricken) cost to provide coverage for any liens or encumbrances first filed or recorded after the commitment date of the title insurance commitment and before the deed is recorded, subject to the title insurance policy conditions, exclusions and exceptions, provided the title company will issue the coverage. If a gap endorsement or

equivalent gap coverage is not available, Buyer may give written notice that title is not acceptable for closing (see lines 482-489).

■ DELIVERY OF MERCHANTABLE TITLE: The required title insurance commitment shall be delivered to Buyer's attorney or Buyer not more than 25 days ("15" if left blank) after acceptance showing title to the Property as of a date no more than 15 days before delivery of such title evidence to be merchantable per lines 454-464, subject only to liens which will be paid out of the proceeds of closing and standard title insurance requirements and exceptions.

■ TITLE NOT ACCEPTABLE FOR CLOSING: If title is not acceptable for closing, Buyer shall notify Seller in writing of objections to title within 15 days ("15" if left blank) after delivery of the title commitment to Buyer or Buyer's attorney. In such event, Seller shall have 15 days ("15" if left blank) from Buyer's delivery of the notice stating title objections, to deliver notice to Buyer stating Seller's election to remove the objections by the time set for closing. If Seller is unable to remove said objections, Buyer shall have five days from receipt of notice thereof, to deliver written notice waiving the objections, and the time for closing shall be extended accordingly. If Buyer does not waive the objections, this Offer shall be null and void. Providing title evidence acceptable for closing does not extinguish Seller's obligations to give merchantable title to Buyer.

■ SPECIAL ASSESSMENTS/OTHER EXPENSES: Special assessments, if any, levied or for work actually commenced prior to the date stated on line 1 of this Offer shall be paid by Seller no later than closing. All other special assessments shall be paid by Buyer. "Levied" means the local municipal governing body has adopted and published a final resolution describing the planned improvements and the assessment of benefits.

CAUTION: Consider a special agreement if area assessments, property owners association assessments, special charges for current services under Wis. Stat. § 66.0627 or other expenses are contemplated. "Other expenses" are one-time charges or ongoing use fees for public improvements (other than those resulting in special assessments) relating to curb, gutter, street, sidewalk, municipal water, sanitary and storm water and storm sewer (including all sewer mains and hook-up/connection and interceptor charges), parks, street lighting and street trees, and impact fees for other public facilities, as defined in Wis. Stat. § 66.0617(1)(f).

LEASED PROPERTY If Property is currently leased and lease(s) extend beyond closing, Seller shall assign Seller's rights under said lease(s) and transfer all security deposits and prepaid rents thereunder to Buyer at closing. The terms of the (written) (oral) STRIKE ONE lease(s), if any, are _____

_____

_____ Insert additional terms, if any, at lines 620-650 or attach as an addendum per line 676.

N/A ~~**ESTOPPEL LETTERS:** Seller shall deliver to Buyer no later than ____ days ("7" if left blank) before closing, estoppel letters dated within ____ days ("15" if left blank) before closing, from each non-residential tenant, confirming the lease term, rent installment amounts, amount of security deposit, and disclosing any defaults, claims or litigation with regard to the lease or tenancy.~~

DEFINITIONS

■ ACTUAL RECEIPT: "Actual Receipt" means that a Party, not the Party's recipient for delivery, if any, has the document or written notice physically in the Party's possession, regardless of the method of delivery. If the document or written notice is electronically delivered, Actual Receipt shall occur when the Party opens the electronic transmission.

■ BUSINESS DAY: "Business Day" means a calendar day other than Saturday, Sunday, any legal public holiday under Wisconsin or Federal law, and any other day designated by the President such that the postal service does not receive registered mail or make regular deliveries on that day.

■ DEADLINES: "Deadlines" expressed as a number of "days" from an event, such as acceptance, are calculated by excluding the day the event occurred and by counting subsequent calendar days. The Deadline expires at Midnight on the last day. Additionally, Deadlines expressed as a specific number of Business Days are calculated in the same manner except that only Business Days are counted while other days are excluded. Deadlines expressed as a specific number of "hours" from the occurrence of an event, such as receipt of a notice, are calculated from the exact time of the event, and by counting 24 hours per calendar day. Deadlines expressed as a specific day of the calendar year or as the day of a specific event, such as closing, expire at Midnight of that day. "Midnight" is defined as 11:59 p.m. Central Time.

■ DEFECT: "Defect" means a condition that would have a significant adverse effect on the value of the Property; that would significantly impair the health or safety of future occupants of the Property; or that if not repaired, removed or replaced would significantly shorten or adversely affect the expected normal life of the premises.

■ FIRM: "Firm" means a licensed sole proprietor broker or a licensed broker business entity.

■ PARTY: "Party" means the Buyer or the Seller; "Parties" refers to both Buyer and Seller.

■ PROPERTY: Unless otherwise stated, "Property" means the real estate described at lines 4-8.

INCLUSION OF OPTIONAL PROVISIONS Terms of this Offer that are preceded by an OPEN BOX (☐) are part of this offer ONLY if the box is marked such as with an "X". They are not part of this offer if marked "N/A" or are left blank.

PROPERTY DIMENSIONS AND SURVEYS Buyer acknowledges that any land, building or room dimensions, or total acreage or building square footage figures, provided to Buyer by Seller or by a broker, may be approximate because of rounding, formulas used or other reasons, unless verified by survey or other means.

CAUTION: Buyer should verify total square footage formula, total square footage/acreage figures, and land, building or room dimensions, if material.

DISTRIBUTION OF INFORMATION Buyer and Seller authorize the agents of Buyer and Seller to: (i) distribute copies of the Offer to Buyer's lender, appraisers, title insurance companies and any other settlement service providers for the transaction as defined by the Real Estate Settlement Procedures Act (RESPA); (ii) report sales and financing concession data to multiple listing service sold databases; (iii) provide active listing, pending sale, closed sale and financing concession information and data, and related information regarding seller contributions, incentives or assistance, and third party gifts, to appraisers researching comparable sales, market conditions and listings, upon inquiry; and (iv) distribute copies of this Offer to the seller, or seller's agent, of another property that Seller intends on purchasing.

MAINTENANCE Seller shall maintain the Property and all personal property included in the purchase price until the earlier of closing or Buyer's occupancy, in materially the same condition it was in as of the date on line 1 of this Offer, except for ordinary wear and tear and changes agreed upon by Parties.

PROPERTY DAMAGE BETWEEN ACCEPTANCE AND CLOSING If, prior to closing, the Property is damaged in an amount not more than five percent of the purchase price, other than normal wear and tear, Seller shall promptly notify Buyer in writing, and will be obligated to restore the Property to materially the same condition it was in as of the date on line 1 of this Offer. Seller shall provide Buyer with copies of all required permits and lien waivers for the lienable repairs no later than closing. If the amount of damage exceeds five percent of the purchase price, Seller shall promptly notify Buyer in writing of the damage and this Offer may be terminated at option of Buyer. Should Buyer elect to carry out this Offer despite such damage, Buyer shall be entitled to the insurance proceeds, if any, relating to the damage to the Property, plus a credit towards the purchase price equal to the amount of Seller's deductible on such policy, if any. However, if this sale is financed by a land contract or a mortgage to Seller, any insurance proceeds shall be held in trust for the sole purpose of restoring the Property.

BUYER'S PRE-CLOSING WALK-THROUGH Within three days prior to closing, at a reasonable time pre-approved by Seller or Seller's agent, Buyer shall have the right to walk through the Property to determine that there has been no significant change in the condition of the Property, except for ordinary wear and tear and changes agreed upon by Parties, and that any Defects Seller has agreed to cure have been repaired in the manner agreed to by the Parties.

OCCUPANCY Occupancy of the entire Property shall be given to Buyer at time of closing unless otherwise provided in this Offer at lines 620-650 or in an addendum attached per line 676. At time of Buyer's occupancy, Property shall be in broom swept condition and free of all debris, refuse, and personal property except for personal property belonging to current tenants, or sold to Buyer or left with Buyer's consent. Occupancy shall be given subject to tenant's rights, if any.

DEFAULT Seller and Buyer each have the legal duty to use good faith and due diligence in completing the terms and conditions of this Offer. A material failure to perform any obligation under this Offer is a default that may subject the defaulting party to liability for damages or other legal remedies.

If Buyer defaults, Seller may:

(1) sue for specific performance and request the earnest money as partial payment of the purchase price; or

(2) terminate the Offer and have the option to: (a) request the earnest money as liquidated damages; or (b) sue for actual damages.

If Seller defaults, Buyer may:

(1) sue for specific performance; or

(2) terminate the Offer and request the return of the earnest money, sue for actual damages, or both.

In addition, the Parties may seek any other remedies available in law or equity. The Parties understand that the availability of any judicial remedy will depend upon the circumstances of the situation and the discretion of the courts. If either Party defaults, the Parties may renegotiate the Offer or seek nonjudicial dispute resolution instead of the remedies outlined above. By agreeing to binding arbitration, the Parties may lose the right to litigate in a court of law those disputes covered by the arbitration agreement.

NOTE: IF ACCEPTED, THIS OFFER CAN CREATE A LEGALLY ENFORCEABLE CONTRACT. BOTH PARTIES SHOULD READ THIS DOCUMENT CAREFULLY. THE FIRM AND ITS AGENTS MAY PROVIDE A GENERAL EXPLANATION OF THE PROVISIONS OF THE OFFER BUT ARE PROHIBITED BY LAW FROM GIVING ADVICE OR OPINIONS CONCERNING YOUR LEGAL RIGHTS UNDER THIS OFFER OR HOW TITLE SHOULD BE TAKEN AT CLOSING. AN ATTORNEY SHOULD BE CONSULTED IF LEGAL ADVICE IS NEEDED.

ENTIRE CONTRACT This Offer, including any amendments to it, contains the entire agreement of the Buyer and Seller regarding the transaction. All prior negotiations and discussions have been merged into this Offer. This agreement binds and inures to the benefit of the Parties to this Offer and their successors in interest.

NOTICE ABOUT SEX OFFENDER REGISTRY You may obtain information about the sex offender registry and persons registered with the registry by contacting the Wisconsin Department of Corrections on the Internet at http://www.doc.wi.gov or by telephone at (608) 240-5830.

FOREIGN INVESTMENT IN REAL PROPERTY TAX ACT (FIRPTA) Section 1445 of the Internal Revenue Code (IRC) provides that a transferee (Buyer) of a United States real property interest must pay or withhold as a tax up to 15% of the total "Amount Realized" in the sale if the transferor (Seller) is a "Foreign Person" and no exception from FIRPTA withholding applies. A "Foreign Person" is a nonresident alien individual, foreign corporation, foreign partnership, foreign trust, or foreign

estate. The "Amount Realized" is the sum of the cash paid, the fair market value of other property transferred, and the amount of any liability assumed by Buyer.

CAUTION: Under this law if Seller is a Foreign Person, and Buyer does not pay or withhold the tax amount, Buyer may be held directly liable by the U.S. Internal Revenue Service for the unpaid tax and a tax lien may be placed upon the Property.

Seller hereby represents that Seller is a non-Foreign Person, unless (1) Seller represents Seller is a Foreign Person in a condition report incorporated in this Offer per lines 93-95, or (2) no later than 10 days after acceptance, Seller delivers notice to Buyer that Seller is a Foreign Person, in which cases the provisions on lines 607-609 apply.

IF SELLER IS A NON-FOREIGN PERSON. Seller shall, no later than closing, execute and deliver to Buyer, or a qualified substitute (attorney or title company as stated in IRC § 1445), a sworn certification under penalties of perjury of Seller's non-foreign status in accordance with IRC § 1445. If Seller fails to timely deliver certification of Seller's non-foreign status, Buyer shall: (1) withhold the amount required to be withheld pursuant to IRC § 1445; or, (2) declare Seller in default of this Offer and proceed under lines 571-578.

IF SELLER IS A FOREIGN PERSON. If Seller has represented that Seller is a Foreign Person, Buyer shall withhold the amount required to be withheld pursuant to IRC § 1445 at closing unless the Parties have amended this Offer regarding amounts to be withheld, any withholding exemption to be applied, or other resolution of this provision.

COMPLIANCE WITH FIRPTA. Buyer and Seller shall complete, execute, and deliver, on or before closing, any instrument, affidavit, or statement needed to comply with FIRPTA, including withholding forms. If withholding is required under IRC § 1445, and the net proceeds due Seller are not sufficient to satisfy the withholding required in this transaction, Seller shall deliver to Buyer, at closing, the additional funds necessary to satisfy the applicable withholding requirement. Seller also shall pay to Buyer an amount not to exceed $1,000 for actual costs associated with the filing and administration of forms, affidavits, and certificates necessary for FIRPTA withholding and any withholding agent fees.

Any representations made by Seller with respect to FIRPTA shall survive the closing and delivery of the deed.

Firms, Agents, and Title Companies are not responsible for determining FIRPTA status or whether any FIRPTA exemption applies. The Parties are advised to consult with their respective independent legal counsel and tax advisors regarding FIRPTA.

ADDITIONAL PROVISIONS/CONTINGENCIES This Offer is contingent on the Village Board of Seller, prior to Closing, approving the planned unit development (PUD) status or other zoning classification of the Property to allow Buyer to lease the Property to Miller Monument Co. for use in the Miller Monument Co. business, namely providing cemetery memorials, granite pavers, flagholders, plaques, and civic, public, and veteran memorials.

TAX DEFERRED EXCHANGE If this Property is purchased or sold to accomplish an IRC § 1031 Tax Deferred exchange of like-kind property, both Parties agree to cooperate with any documentation necessary to complete the exchange. The exchangor shall hold the cooperating party harmless from any and all claims, costs or liabilities that may be incurred as a result of the exchange.

655 **DELIVERY OF DOCUMENTS AND WRITTEN NOTICES** Unless otherwise stated in this Offer, delivery of documents and
656 written notices to a Party shall be effective only when accomplished by one of the authorized methods specified at lines
657 658-673.
658 (1) Personal: giving the document or written notice personally to the Party, or the Party's recipient for delivery if named at
659 660 or 661.
660 Name of Seller's recipient for delivery, if any: Attorney Ryan Plisch and Adam Williquette
661 Name of Buyer's recipient for delivery, if any: Renee Miller
662 [N/A] (2) Fax: fax transmission of the document or written notice to the following number:
663 Seller: (_____) _____ Buyer: (_____) _____
664 [N/A] (3) Commercial: depositing the document or written notice, fees prepaid or charged to an account, with a
665 commercial delivery service, addressed either to the Party, or to the Party's recipient for delivery, for delivery to the Party's
666 address at line 669 or 670.
667 [N/A] (4) U.S. Mail: depositing the document or written notice, postage prepaid, in the U.S. Mail, addressed either to the
668 Party, or to the Party's recipient for delivery, for delivery to the Party's address.
669 Address for Seller: _____
670 Address for Buyer: _____
671 [X] (5) Email: electronically transmitting the document or written notice to the email address.
672 Email Address for Seller: rmp@dempseylaw.com and adam@americancre.net
673 Email Address for Buyer: renee@millermonument.com
674 **PERSONAL DELIVERY/ACTUAL RECEIPT** Personal delivery to, or Actual Receipt by, any named Buyer or Seller
675 constitutes personal delivery to, or Actual Receipt by, all Buyers or Sellers.
676 [X] **ADDENDA:** The attached Addendum A is/are made part of this Offer.
677 This Offer was drafted by [Licensee and Firm] Attorney Ryan M. Plisch, Dempsey Law Firm, LLP
678 Buyer Entity Name (if any): Walter Miller Family Investment Properties, LLC
679 (x) Renee L. Miller 1-25-2022
680 Buyer's/Authorized Signature ▲ Print Name/Title Here ▶ Renee Miller, Member Date ▲
681 (x) _____
682 Buyer's/Authorized Signature ▲ Print Name/Title Here ▶ Date ▲
683
684 **SELLER ACCEPTS THIS OFFER. THE WARRANTIES, REPRESENTATIONS AND COVENANTS MADE IN THIS**
685 **OFFER SURVIVE CLOSING AND THE CONVEYANCE OF THE PROPERTY. SELLER AGREES TO CONVEY THE**
686 **PROPERTY ON THE TERMS AND CONDITIONS AS SET FORTH HEREIN AND ACKNOWLEDGES RECEIPT OF A**
687 **COPY OF THIS OFFER.**
688 Seller Entity Name (if any): Village of Jackson, a Wisconsin municipal corporation
689 (x) Jennifer Keller Jennifer Keller 1/25/22
690 Seller's/Authorized Signature ▲ Print Name/Title Here ▶ Jen Keller, Village Administrator Date ▲
691 (x) _____
692 Seller's/Authorized Signature ▲ Print Name/Title Here ▶ Date ▲
693 This Offer was presented to Seller by [Licensee and Firm] _____
694 _____ on _____ at _____ a.m./p.m.
695 This Offer is rejected _____ _____ This Offer is countered [See attached counter] _____ _____
696 Seller Initials ▲ Date ▲ Seller Initials ▲ Date ▲

ADDENDUM A
TO WB-15 COMMERCIAL OFFER TO PURCHASE

This Addendum A ("Addendum A") is attached to and forms a part of the Commercial Offer to Purchase dated as of January 17, 2022 (the "Offer") between the Village of Jackson, as Seller, and Walter Miller Family Investment Properties, LLC, as Buyer, for the Property, which is more particularly described in the Offer. Capitalized terms not otherwise defined herein shall have the meanings set forth in the Offer. If there is a conflict between the Offer and the terms and provisions of this Addendum A, the terms and provisions of this Addendum A shall control.

1. No Representations. Buyer hereby acknowledges that Seller has not made and shall not be deemed to have made any oral or written representations or warranties, whether expressed or implied (including without limitation warranties of habitability, merchantability or fitness for a particular purpose) with respect to the Property or the transactions contemplated by the Offer. Buyer acknowledges that all materials which have been provided by Seller have been provided without any warranty or representation, expressed or implied, as to their content, suitability for any purpose, accuracy, truthfulness or completeness. Buyer shall not have any recourse against Seller in the event of any errors or omissions in said documents. Buyer is acquiring the Property based solely on its own independent investigation and inspection of the Property and not in reliance on any information provided by Seller. Buyer expressly disclaims any intent to rely on any such materials provided to it by Seller and agrees that it shall rely solely on its own independently developed or verified information.

2. AS-IS, WHERE-IS. Buyer is purchasing the Property in its existing condition "AS-IS, WHERE-IS, AND WITH ALL FAULTS" with respect to all facts, circumstances, conditions and defects, and, Seller has no obligation to determine or correct any such facts, circumstances, conditions or defects or to compensate Buyer for same. Seller has specifically bargained for the assumption by Buyer of all responsibility to investigate the Property and all risk of adverse conditions. Prior to Closing, Buyer will undertake all such investigations of the Property as Buyer deems necessary or appropriate under the circumstances as to the status of the Property and based upon same, Buyer is and will be relying strictly and solely upon such inspections and examinations and the advice and counsel of its own consultants, agents, legal counsel and officers. Buyer is and will be fully satisfied that the Purchase Price is fair and adequate consideration for the Property and Buyer assumes the full risk of any loss or damage occasioned by any fact, circumstance, condition or defect pertaining to the Property.

3. Approval. Buyer is aware that Seller's ability to convey this Property is conditioned upon the Village of Jackson Village Board voting to approve the transaction contemplated by the Offer. The Seller shall proceed in good faith and take reasonable efforts to secure said approval. However, Seller may immediately terminate the Offer at any time prior to Closing (by providing written notice to Buyer) and declare the same null and void if Seller, in its sole and absolute discretion, determines that said Village Board approval has not been fully obtained.

4. Governmental Immunity. Seller, the Village of Jackson, expressly retains all rights and benefits of governmental immunity in accordance with Wisconsin Statutes. Nothing in the Offer shall be deemed as a waiver of sovereign immunity or as increasing the Village's liability beyond any statutory limitation of liability. Nothing in the Offer shall inure to the benefit of any third party for the purpose of allowing any claim against the Village which would otherwise be barred under the doctrine of sovereign immunity or by operation of law.

5. Survival. The provisions of this Addendum A shall survive the Closing or the earlier termination of the Offer and shall not be deemed to have merged into any of the documents executed or delivered at the Closing.

SELLER: Village of Jackson

By: Jennifer Keller
Jen Keller, Village Administrator

BUYER: Walter Miller Family Investment Properties, LLC

By: Renee Miller, Member
Renee Miller, Member

WB-5 COMMERCIAL LISTING CONTRACT - EXCLUSIVE RIGHT TO SELL

SELLER GIVES THE FIRM THE EXCLUSIVE RIGHT TO SELL THE PROPERTY ON THE FOLLOWING TERMS:

■ PROPERTY DESCRIPTION: Street address is: N168W20733 & N168W20753 Main Street _____ in the Village of Jackson, County of Washington, Wisconsin. Insert additional description, if any, at lines 320-331 or attach as an addendum per lines 332-337.

■ INCLUDED IN LIST PRICE: Seller is including in the list price the Property, Fixtures not excluded on lines 9-12, and the following items: None. _____ .

■ NOT INCLUDED IN LIST PRICE: None. _____ .

CAUTION: Identify Fixtures to be excluded by Seller or which are rented and will continue to be owned by the lessor. (See lines 182-193).

■ Seller shall convey the personal property by Bill of Sale, free and clear of all liens and encumbrances except: None. _____ .

■ LIST PRICE: Four Hundred Ninety-Nine Thousand Dollars ($499,000.00).

■ SELLER AUTHORITY: Seller represents that Seller has authority to sign this Listing and negotiate the sale of the Property. If Seller is an entity, Seller agrees, within 15 days of the execution of this Listing, to provide the Firm with a copy of document(s) confirming the authority to negotiate the sale of the Property.

■ ZONING: Seller represents that the Property is zoned: Business .

■ ZONING VARIANCES, NONCONFORMING USE OR DEVELOPMENT RESTRICTIONS: Seller represents that the Property is subject to the following special zoning, land use, development restrictions, zoning variances, nonconforming uses or other conditions affecting the Property: None. _____ .

MARKETING Seller authorizes and the Firm and its agents agree to use reasonable efforts to market the Property. Seller agrees that the Firm and its agents may market Seller's personal property identified on lines 5-8 during the term of this Listing. The marketing may include: ---------- .

The Firm and its agents may advertise the following special financing and incentives offered by Seller: ---------- . Seller has a duty to cooperate with the marketing efforts of the Firm and its agents. See lines 231-237 regarding the Firm's role as marketing agent and Seller's duty to notify the Firm of any potential buyer known to Seller. Seller agrees that the Firm and its agents may market other properties during the term of this Listing.

CAUTION: Limiting the Firm's cooperation with other firms may reduce the marketability of the Property.

COMPENSATION TO OTHERS The Firm offers the following commission to cooperating firms: to be determined by listing broker. . (Exceptions if any): ----------

COMMISSION The Firm's commission shall be six percent (6%) of the selling price, or $15,000, whichever is greater, to be paid at closing. _____ .

■ EARNED: Seller shall pay the Firm's commission, which shall be earned, if, during the term of this Listing:

1) Seller sells or accepts an offer which creates an enforceable contract for the sale of all or any part of the Property;
2) Seller grants an option to purchase all or any part of the Property which is subsequently exercised;
3) Seller exchanges or enters into a binding exchange agreement on all or any part of the Property;
4) A transaction occurs which causes an effective change in ownership or control of all or any part of the Property; or
5) A ready, willing and able buyer submits a bona fide written offer to Seller or the Firm for the Property at, or above, the list price and on substantially the same terms set forth in this Listing and the current WB-15 Commercial Offer to Purchase, even if Seller does not accept this buyer's offer. A buyer is ready, willing and able when the buyer submitting the written offer has the ability to complete the buyer's obligations under the written offer.

The Firm's commission shall be earned if, during the term of the Listing, one owner of the Property sells, conveys, exchanges or options, as described above, an interest in all or any part of the Property to another owner, except by divorce judgment.

■ DUE AND PAYABLE: Once earned, the Firm's commission is due and payable in full at the earlier of closing or the date set for closing, even if the transaction does not close, unless otherwise agreed in writing.

■ CALCULATION: A percentage commission shall be calculated based on the following, if earned above:

- Under 1) or 2) the total consideration between the parties in the transaction.
- Under 3) or 4) the list price if the entire Property is involved.
- Under 3) if the exchange involves less than the entire Property or under 4) if the effective change in ownership or control involves less than the entire Property, the fair market value of the portion of the Property exchanged or for which there was an effective change in ownership or control.
- Under 5) the total offered purchase price.

NOTE: If a commission is earned for a portion of the Property it does not terminate the Listing as to any remaining Property.

BUYER FINANCIAL CAPABILITY The Firm and its agents are not responsible under Wisconsin statutes or regulations to qualify a buyer's financial capability. If Seller wishes to confirm a buyer's financial capability, Seller may negotiate inclusion of a contingency for financing, proof of funds, qualification from a lender, sale of buyer's property, or other confirmation in any offer to purchase or contract.

LIEN NOTICE The Firm has the authority under section 779.32 of the Wisconsin Statutes to file a lien for commissions or compensation earned but not paid when due against the commercial real estate, or the interest in the commercial real estate, if any, that is the subject of this Listing. "Commercial real estate" includes all real estate except (a) real property containing 8 or fewer dwelling units, (b) real property that is zoned for residential purposes and that does not contain any buildings or structures, and (c) real property that is zoned for agricultural purposes.

DISCLOSURE TO CLIENTS

Under Wisconsin law, a brokerage firm (hereinafter firm) and its brokers and salespersons (hereinafter agents) owe certain duties to all parties to a transaction:

(a) The duty to provide brokerage services to you fairly and honestly.
(b) The duty to exercise reasonable skill and care in providing brokerage services to you.
(c) The duty to provide you with accurate information about market conditions within a reasonable time if you request it, unless disclosure of the information is prohibited by law.
(d) The duty to disclose to you in writing certain Material Adverse Facts about a property, unless disclosure of the information is prohibited by law. (See lines 194-197.)
(e) The duty to protect your confidentiality. Unless the law requires it, the firm and its agents will not disclose your confidential information or the confidential information of other parties. (See lines 142-159.)
(f) The duty to safeguard trust funds and other property the firm or its agents holds.
(g) The duty, when negotiating, to present contract proposals in an objective and unbiased manner and disclose the advantages and disadvantages of the proposals.

BECAUSE YOU HAVE ENTERED INTO AN AGENCY AGREEMENT WITH A FIRM, YOU ARE THE FIRM'S CLIENT. A FIRM OWES ADDITIONAL DUTIES TO YOU AS A CLIENT OF THE FIRM:

(a) The firm or one of its agents will provide, at your request, information and advice on real estate matters that affect your transaction, unless you release the firm from this duty.
(b) The firm or one of its agents must provide you with all material facts affecting the transaction, not just Adverse Facts.
(c) The firm and its agents will fulfill the firm's obligations under the agency agreement and fulfill your lawful requests that are within the scope of the agency agreement.
(d) The firm and its agents will negotiate for you, unless you release them from this duty.
(e) The firm and its agents will not place their interests ahead of your interests. The firm and its agents will not, unless required by law, give information or advice to other parties who are not the firm's clients, if giving the information or advice is contrary to your interests.

If you become involved in a transaction in which another party is also the firm's client (a "multiple representation relationship"), different duties may apply.

MULTIPLE REPRESENTATION RELATIONSHIPS AND DESIGNATED AGENCY

■ A multiple representation relationship exists if a firm has an agency agreement with more than one client who is a party in the same transaction. If you and the firm's other clients in the transaction consent, the firm may provide services through designated agency, which is one type of multiple representation relationship.

■ Designated agency means that different agents with the firm will negotiate on behalf of you and the other client or clients in the transaction, and the firm's duties to you as a client will remain the same. Each agent will provide information, opinions, and advice to the client for whom the agent is negotiating, to assist the client in the negotiations. Each client will be able to receive information, opinions, and advice that will assist the client, even if the information, opinions, or advice gives the client advantages in the negotiations over the firm's other clients. An agent will not reveal any of your confidential information to another party unless required to do so by law.

■ If a designated agency relationship is not authorized by you or other clients in the transaction, you may still authorize

or reject a different type of multiple representation relationship in which the firm may provide brokerage services to more than one client in a transaction but neither the firm nor any of its agents may assist any client with information, opinions, and advice which may favor the interests of one client over any other client. Under this neutral approach, the same agent may represent more than one client in a transaction.

■ If you do not consent to a multiple representation relationship the firm will not be allowed to provide brokerage services to more than one client in the transaction.

CHECK ONLY ONE OF THE THREE BELOW:

[X] The same firm may represent me and the other party as long as the same agent is not representing us both. (multiple representation relationship with designated agency)

[ ] The same firm may represent me and the other party, but the firm must remain neutral regardless if one or more different agents are involved. (multiple representation relationship without designated agency)

[ ] The same firm cannot represent both me and the other party in the same transaction. (I reject multiple representation relationships)

NOTE: All clients who are parties to this agency agreement consent to the selection checked above. You may modify this selection by written notice to the firm at any time. Your firm is required to disclose to you in your agency agreement the commission or fees that you may owe to your firm. If you have any questions about the commission or fees that you may owe based upon the type of agency relationship you select with your firm, you should ask your firm before signing the agency agreement.

SUBAGENCY

Your firm may, with your authorization in the agency agreement, engage other firms (subagent firms) to assist your firm by providing brokerage services for your benefit. A subagent firm and the agents with the subagent firm will not put their own interests ahead of your interests. A subagent firm will not, unless required by law, provide advice or opinions to other parties if doing so is contrary to your interests.

PLEASE REVIEW THIS INFORMATION CAREFULLY. An agent can answer your questions about brokerage services, but if you need legal advice, tax advice, or a professional home inspection, contact an attorney, tax advisor, or home inspector.

This disclosure is required by section 452.135 of the Wisconsin statutes and is for information only. It is a plain language summary of the duties owed to you under section 452.133 (2) of the Wisconsin statutes.

■ CONFIDENTIALITY NOTICE TO CLIENTS: The Firm and its agents will keep confidential any information given to the Firm or its agents in confidence, or any information obtained by the Firm and its agents that a reasonable person would want to be kept confidential, unless the information must be disclosed by law or you authorize the Firm to disclose particular information. The Firm and its agents shall continue to keep the information confidential after the Firm is no longer providing brokerage services to you.

The following information is required to be disclosed by law:

1) Material Adverse Facts, as defined in section 452.01 (5g) of the Wisconsin statutes (see lines 194-197).
2) Any facts known by the Firm and its agents that contradict any information included in a written inspection report on the property or real estate that is the subject of the transaction.

To ensure that the Firm and its agents are aware of what specific information you consider confidential, you may list that information below (see lines 154-156). At a later time, you may also provide the Firm with other information you consider to be confidential.

CONFIDENTIAL INFORMATION: ----------

--- .

NON-CONFIDENTIAL INFORMATION (The following may be disclosed by the Firm and its agents): ----------
---
--- .

OCCUPANCY Unless otherwise provided, Seller agrees to give buyer occupancy of the Property at time of closing and to have the Property in broom swept condition and free of all debris and personal property except for personal property belonging to current tenants, sold to buyer or left with buyer's consent.

LEASED PROPERTY If Property is currently leased and lease(s) will extend beyond closing, Seller shall assign Seller's rights under the lease(s) and transfer all security deposits and prepaid rents (subject to agreed upon prorations) thereunder to buyer at closing. Seller acknowledges that Seller remains liable under the lease(s) unless released by tenant(s). CAUTION: Seller should consider obtaining an indemnification agreement from buyer for liabilities under the lease(s) unless released by tenants.

DEFINITIONS

■ ADVERSE FACT: An "Adverse Fact" means any of the following:

(a) A condition or occurrence that is generally recognized by a competent licensee as doing any of the following:

1) Significantly and adversely affecting the value of the Property;
2) Significantly reducing the structural integrity of improvements to real estate; or
3) Presenting a significant health risk to occupants of the Property.

(b) Information that indicates that a party to a transaction is not able to or does not intend to meet his or her obligations under a contract or agreement made concerning the transaction.

■ DEADLINES - DAYS: Deadlines expressed as a number of "days" from an event are calculated by excluding the day the event occurred and by counting subsequent calendar days.

■ DEFECT: "Defect" means a condition that would have a significant adverse effect on the value of the Property; that would significantly impair the health or safety of future occupants of the Property; or that if not repaired, removed or replaced would significantly shorten or adversely affect the expected normal life of the premises.

■ FIRM: "Firm" means a licensed sole proprietor broker or a licensed broker business entity.

■ FIXTURES: A "Fixture" is an item of property which is physically attached to or so closely associated with land or buildings so as to be treated as part of the real estate, including, without limitation, physically attached items not easily removable without damage to the premises, items specifically adapted to the premises, and items customarily treated as fixtures, including, but not limited to, all: garden bulbs; plants; shrubs and trees; screen and storm doors and windows; electric lighting fixtures; window shades; curtain and traverse rods; blinds and shutters; central heating and cooling units and attached equipment; water heaters, water softeners and treatment systems; sump pumps; attached or fitted floor coverings; awnings; attached antennas and satellite dishes, audio/visual wall mounting brackets (but not the audio/visual equipment); garage door openers and remote controls; installed security systems; central vacuum systems and accessories; in-ground sprinkler systems and component parts; built-in appliances; ceiling fans; fences; in-ground pet containment systems (but not the collars); storage buildings on permanent foundations and docks/piers on permanent foundations. A "Fixture" does not include trade fixtures owned by tenants of the Property.

CAUTION: Exclude fixtures not owned by Seller such as rented fixtures and tenant's trade fixtures.

■ MATERIAL ADVERSE FACT: A "Material Adverse Fact" means an Adverse Fact that a party indicates is of such significance, or that is generally recognized by a competent licensee as being of such significance to a reasonable party, that it affects or would affect the party's decision to enter into a contract or agreement concerning a transaction or affects or would affect the party's decision about the terms of such a contract or agreement.

■ PERSON ACTING ON BEHALF OF BUYER: "Person Acting on Behalf of Buyer" shall mean any person joined in interest with buyer, or otherwise acting on behalf of buyer, including but not limited to buyer's immediate family, agents, employees, directors, managers, members, officers, owners, partners, incorporators and organizers, as well as any and all corporations, partnerships, limited liability companies, trusts or other entities created or controlled by, affiliated with or owned by buyer, in whole or in part whether created before or after expiration of this Listing.

■ PROPERTY: Unless otherwise stated, "Property" means the real estate described at lines 2-4.

■ PROTECTED BUYER: Means a buyer who personally, or through any Person Acting on Behalf of Buyer, during the term of this Listing:

1) Delivers to Seller or the Firm or its agents a written offer to purchase, exchange or option on the Property;
2) Views the Property with Seller or negotiates directly with Seller by communicating with Seller regarding any potential terms upon which the buyer might acquire an interest in the Property; or
3) Attends an individual showing of the Property or communicates with agents of the Firm or cooperating firms regarding any potential terms upon which the buyer might acquire an interest in the Property, but only if the Firm or its agents deliver the buyer's name to Seller, in writing, no later than three days after the earlier of expiration or termination (lines 301-311) of the Listing. The requirement in 3), to deliver the buyer's name to Seller in writing, may be fulfilled as follows:
   a) If the Listing is effective only as to certain individuals who are identified in the Listing, by the identification of the individuals in the Listing; or,
   b) If a buyer has requested that the buyer's identity remain confidential, by delivery of a written notice identifying the firm or agents with whom the buyer negotiated and the date(s) of any individual showings or other negotiations.

A Protected Buyer also includes any Person Acting on Behalf of Buyer joined in interest with or otherwise acting on behalf of a Protected Buyer, who acquires an interest in the Property during the extension of listing period as noted on lines 298-302.

SELLER DISCLOSURE REPORT Seller agrees to complete the disclosure report provided by the Firm to the best of Seller's knowledge. Seller agrees to amend the report should Seller learn of any Defect(s) after completion of the report but before acceptance of a buyer's offer to purchase. Seller authorizes the Firm and its agents to distribute the report to all interested parties and their agents inquiring about the Property. Seller acknowledges that the Firm and its agents have a duty to disclose all Material Adverse Facts as required by law.

SELLER REPRESENTATIONS REGARDING DEFECTS Seller represents to the Firm that as of the date of this Listing, Seller has no notice or knowledge of any Defects affecting the Property other than those noted on Seller's disclosure report or written response.
WARNING: IF SELLER REPRESENTATIONS ARE INCORRECT OR INCOMPLETE, SELLER MAY BE LIABLE FOR DAMAGES AND COSTS.

SELLER COOPERATION WITH MARKETING EFFORTS Seller agrees to cooperate with the Firm in the Firm's marketing efforts and to provide the Firm with all records, documents and other material in Seller's possession or control which are required in connection with the sale. Seller authorizes the Firm to do those acts reasonably necessary to effect a sale and Seller agrees to cooperate fully with these efforts which may include use of a multiple listing service, Internet advertising or a lockbox system at the Property. Seller shall promptly refer all persons making inquiries concerning the Property to the Firm and notify the Firm in writing of any potential buyers with whom Seller negotiates or who view the Property with Seller during the term of this Listing.

COOPERATION, ACCESS TO PROPERTY OR OFFER PRESENTATION The parties agree that the Firm and its agents will work and cooperate with other firms in marketing the Property, including firms acting as subagents (other firms engaged by the Firm - see lines 132-136) and firms representing buyers. Cooperation includes providing access to the Property for showing purposes and presenting offers and other proposals from these firms to Seller. Note any firms with whom the Firm shall not cooperate, any firms or agents or buyers who shall not be allowed to attend showings, and the specific terms of offers which should not be submitted to Seller: _____ .

EXCLUSIONS All persons who may acquire an interest in the Property who are Protected Buyers under a prior listing contract are excluded from this Listing to the extent of the prior firm's legal rights, unless otherwise agreed to in writing. Within seven days of the date of this Listing, Seller agrees to deliver to the Firm a written list of all such Protected Buyers. NOTE: If Seller fails to timely deliver this list to the Firm, Seller may be liable to the Firm for damages and costs. The following other buyers _____ are excluded from this Listing until _____ [INSERT DATE]. These other buyers are no longer excluded from this Listing after the specified date unless, on or before the specified date, Seller has either accepted a written offer from the buyer or sold the Property to the buyer.

DELIVERY OF DOCUMENTS AND WRITTEN NOTICES Unless otherwise stated in this Listing, delivery of documents and written notices to a party shall be effective only when accomplished by one of the methods specified at lines 256-275.
(1) Personal Delivery: giving the document or written notice personally to the party, or the party's recipient for delivery if named at line 258 or 259.
Seller's recipient for delivery (optional): Jen Keller, Village Administrator
Firm's recipient for delivery (optional): Adam Williquette
[ ] (2) Fax: fax transmission of the document or written notice to the following telephone number:
Seller: (_____) _____ Firm: (_____) _____
[ ] (3) Commercial Delivery: depositing the document or written notice fees prepaid or charged to an account with a commercial delivery service, addressed either to the party, or to the party's recipient for delivery if named at line 258 or 259, for delivery to the party's delivery address at line 268 or 269.
[ ] (4) U.S. Mail: depositing the document or written notice postage prepaid in the U.S. Mail, addressed either to the party, or to the party's recipient for delivery if named at line 258 or 259 for delivery to the party's delivery address at line 268 or 269.
Delivery address for Seller: _____
Delivery address for Firm: _____
[X] (5) E-Mail: electronically transmitting the document or written notice to the party's e-mail address, if given below at line 274 or 275. If this is a consumer transaction where the property being purchased or the sale proceeds are used primarily for personal, family or household purposes, each consumer providing an e-mail address below has first consented electronically as required by federal law.
E-Mail address for Seller: jen.keller@villageofjackson.com
E-Mail address for Firm: adam@americancre.net

NON-DISCRIMINATION Seller and the Firm and its agents agree that they will not discriminate against any prospective buyer on account of race, color, sex, sexual orientation as defined in Wisconsin Statutes, Section 111.32 (13m), disability, religion, national origin, marital status, lawful source of income, age, ancestry, family status, status as a victim of domestic abuse, sexual assault, or stalking, or in any other unlawful manner.

EARNEST MONEY If the Firm holds trust funds in connection with the transaction, they shall be retained by the Firm in the Firm's trust account. The Firm may refuse to hold earnest money or other trust funds. Should the Firm hold the earnest money, the Firm shall hold and disburse the earnest money funds in accordance with Wis. Stat. Ch. 452 and Wis. Admin. Code Ch. REEB 18. If the transaction fails to close and the Seller requests and receives the earnest money as the total liquidated damages, then upon disbursement to Seller, the earnest money shall be paid first to reimburse the Firm for cash advances made by the Firm on behalf of Seller and one half of the balance, but not in excess of the agreed commission, shall be paid to the Firm as full commission in connection with said purchase transaction and the balance shall belong to Seller. This payment to the Firm shall not terminate this Listing.

OPEN HOUSE AND SHOWING RESPONSIBILITIES Seller is aware that there is a potential risk of injury, damage and/or theft involving persons attending an "individual showing" or an "open house." Seller accepts responsibility for preparing the Property to minimize the likelihood of injury, damage and/or loss of personal property. Seller agrees to hold the Firm and its agents harmless for any losses or liability resulting from personal injury, property damage, or theft occurring during "individual showings" or "open houses" other than those caused by the negligence or intentional wrongdoing of the Firm or its agents. Seller acknowledges that individual showings and open houses may be conducted by licensees other than the Firm, that appraisers and inspectors may conduct appraisals and inspections without being accompanied by agents of the Firm or other licensees, and that buyers or licensees may be present at all inspections and testing and may photograph or videotape Property unless otherwise provided for in additional provisions at lines 320-331 or in an addendum per lines 332-337.

EXTENSION OF LISTING The Listing term is extended for a period of one year as to any Protected Buyer. Upon receipt of a written request from Seller or a firm that has listed the Property, the Firm agrees to promptly deliver to Seller a written list of those buyers known by the Firm and its agents to whom the extension period applies. Should this Listing be terminated by Seller prior to the expiration of the term stated in this Listing, this Listing shall be extended for Protected Buyers, on the same terms, for one year after the Listing is terminated (lines 303-311).

TERMINATION OF LISTING Neither Seller nor the Firm has the legal right to unilaterally terminate this Listing absent a material breach of contract by the other party. Seller understands that the parties to the Listing are Seller and the Firm. Agents for the Firm do not have the authority to enter into a mutual agreement to terminate the Listing, amend the commission amount or shorten the term of this Listing, without the written consent of the agent(s)' supervising broker. Seller and the Firm agree that any termination of this Listing by either party before the date stated on line 339 shall be effective by the Seller only if stated in writing and delivered to the Firm in accordance with lines 253-275 and effective by the Firm only if stated in writing by the supervising broker and delivered to Seller in accordance with lines 253-275.
CAUTION: Early termination of this Listing may be a breach of contract, causing the terminating party to potentially be liable for damages.

DISPUTE RESOLUTION The Parties understand that if there is a dispute about this Listing or an alleged breach, and the parties cannot resolve the dispute by mutual agreement, the parties may consider judicial resolution in court or may consider alternative dispute resolution. Alternative dispute resolution may include mediation and binding arbitration. Should the parties desire to submit any potential dispute to alternative dispute resolution, it is recommended that the parties add such in Additional Provisions or in an Addendum.

NOTICE ABOUT SEX OFFENDER REGISTRY You may obtain information about the sex offender registry and persons registered with the registry by contacting the Wisconsin Department of Corrections on the Internet at http://www.doc.wi.gov or by telephone at (608)240-5830.

ADDITIONAL PROVISIONS **1) The parties shall indemnify and hold each other harmless for any claim, loss, or damage, including attorney's fees, incurred by the other in connection with offering the Listed Property cased by any act, omission, statement or failure to disclose information by the other party. 2) Under the terms of this contract, email delivery is acceptable to all parties.**

ADDENDA The attached addenda _____ is/are made part of this Listing.

TERM OF THE CONTRACT From the **19th** day of **October**, **2021**, up to the earlier of midnight of the **31st** day of **October**, **2022**, or the conveyance of the entire Property.

BY SIGNING BELOW, SELLER ACKNOWLEDGES RECEIPT OF A COPY OF THIS LISTING CONTRACT AND THAT HE/SHE HAS READ ALL 7 PAGES AS WELL AS ANY ADDENDA AND ANY OTHER DOCUMENTS INCORPORATED INTO THE LISTING.

All persons signing below on behalf of a Seller Entity represent that they have legal authority to sign for and bind the Entity.

Village of Jackson, Wisconsin
Seller Entity Name (if any) Print Name ▲

DocuSigned by:
(x) Jen Keller 10/22/2021 — **10/13/2021**
Authorized Signature ▲ Date ▲
Print Name & Title } **Jen Keller** **Village Administrator**

Seller Entity Name (if any) ▲

(x) _____ _____
Authorized Signature ▲ Date ▲
Print Name & Title }

(x) _____ _____
Seller's Signature ▲ Print Name } Date ▲

(x) _____ _____
Seller's Signature ▲ Print Name } Date ▲

(x) _____ _____
Seller's Signature ▲ Print Name } Date ▲

(x) _____ _____
Seller's Signature ▲ Print Name } Date ▲

American Commercial Real Estate, LLC
Firm Name ▲

DocuSigned by:
(x) Adam Williquette 10/22/2021
Agent's Signature ▲ Print Name } **Adam Williquette** Date ▲
71CCC83A14C0428...

Memo

To: John Walther, Village Administrator

From: Brian W. Kober, P. E., Director of Public Works

Subject: Replacing Village Hall Generator

Date: October 23, 2020

CC: Board of Public Works; Village Board

The Village Hall Generator stop working in September of 2020, we have been looking at options to find a replacement that matches the same setup that we have presently. Charles Equipment Energy Systems has been actively searching for a replacement.

The proposed 1998 Ford Engine 40kw Olympian natural gas generator has 532 hours of usage on the unit. The total cost of the unit and installation would be $17,600.00. The unit would fit in the current encloser and work with the existing transfer switch.

The purchase would be done by the Jackson Water Utility and the generator would be relocated to the Jackson Water Utility/Street Department Building after moving the Village Hall and Police Department in September of 2021.

If you have any questions, please do not hesitate to ask.

Brian W. Kober, P.E.

Brian Kober

From: Russell Krueger
Sent: Thursday, October 22, 2020 9:11 AM
To: Brian Kober
Subject: Fwd: V of J PD

Get Outlook for Android

From: Mike Biehl <mike.biehl@charlesequipment.com>
Sent: Wednesday, October 21, 2020 3:10:02 PM
To: Russell Krueger <russell.krueger@villageofjackson.com>
Subject: V of J PD

Village of Jackson PD generator replacement.

1. SAFETY LOCK OUT unit as needed.
2. Open breakers for battery charger and block heaters.
3. Remove remote start wires.
4. Drain oil and antifreeze.
5. Disconnect natural gas supply line.
6. Disconnect electrical connections to generator end junction box.
7. Remove unit from existing pad.
8. Remove unit from existing enclosure.
9. Supply a "USED"
10. Mount "USED" unit into original enclosure.
11. Mount package back onto original pad.
12. Supply labor and material to reconnect natural gas feed.
13. Supply labor and material to reconnect all electrical connections.
14. Close battery charger and block heater breakers.
15. Perform start up services using load bank for 1 hour.
16. Reconnect remote start wires.
17. Perform transfer test with building load.
18. Release unit for beneficial use.

Price Complete $ 17,600.00

Note: There is no way of providing a guarantee resale or trade in allowance for November 2021, However I feel you'd be safe to ESTIMATE $7,000 to $8,000. Worst case, donate to another City facility not necessarily budgeted for new.

Good luck and thank you for allowing us to quote the project.

Regards,

Mike Biehl Sr.
Vice President

MADE IN THE U.K.
NATURAL GAS
OLYMPIAN
G40F1

State of Wisconsin
Governor Tony Evers

Department of Agriculture, Trade and Consumer Protection
Secretary Randy Romanski

April 22, 2022

JEN KELLER ADMNSTR
VILLAGE OF JACKSON
N168 W20733 MAIN ST
PO BOX 637
JACKSON WI 53037-0637

Dear Jen Keller:

The Village of Jackson has a contract with the Department of Agriculture, Trade and Consumer Protection for weights and measures inspection services. The contract is renewable each July 1st.

State law requires that the Department charge municipalities fees sufficient to cover the cost of services rendered. The Bureau of Weights and Measures recently conducted an analysis of its inspection program. This review identified disparities in inspection intervals which resulted in inconsistent inspection frequencies statewide. As a result, the Bureau has determined that a decrease in the number of contract days is warranted.

The Village of Jackson will be charged for two days in FY23 (July 1, 2022 through June 30, 2023), at $400 per day. If the village intends to continue to contract with the State for its weights and measures inspection program, please sign and return the enclosed contract by June 15, 2022 to:

Holly Wing
DATCP
PO Box 8911
Madison, WI 53708-8911

A completed copy of the contract will be returned to you for your records. The municipality will be billed for this service in April 2023.

Sincerely,

Stephen Peter
Manager, Field Operations Section
Bureau of Weights and Measures
Phone: 608-224-4954
Stephen.peter@wisconsin.gov

Enclosures: Wis. Stat. Ch 98, Inspection Frequency Change Memo, FY23 Contract

State of Wisconsin
Governor Tony Evers

Department of Agriculture, Trade and Consumer Protection
Secretary Randy Romanski

April 22, 2022

Subject: Inspection Frequency Change

This memo is to inform you of some upcoming changes with the Department of Agriculture, Trade and Consumer Protection's weights and measures inspection program that will commence July 1, 2022.

The Bureau of Weights and Measures recently conducted an analysis of its inspection program. This review identified some disparity in inspection intervals which resulted in inconsistent inspection frequencies statewide. In order to ensure that businesses inspected by the State are equally served and regulated, the Bureau is moving to a two-year inspection interval for most inspection types, and 'a complaint' inspection basis for some other business types. In most cases, this will mean that businesses in a municipality will be inspected every other year.

What this change in inspection frequency means for municipalities that contract with the Department is that the number of inspection days in the contract will be reduced, and consequently, the annual contract cost for inspection services.

As you are likely aware, State law requires that a municipality with a population over 5,000 either establish their own weights and measures inspection program with enough staff and equipment to ensure compliance with Wisconsin Statute Chapter 98, or contract with the State to provide those services. Should it be available in your area, you also have the option to contract with other municipal weights and measures programs for services. State law also allows a municipality to assess fees to businesses that receive weights and measures services. Those fees may not exceed the actual cost of fees paid to the Department for the same services. Ordinances and fees should be reviewed and adjusted as needed if your municipality recovers weights and measures inspection costs from regulated businesses.

The Bureau has scheduled a Microsoft Teams meeting on May 12, 2022 at 11:00 AM to speak directly with municipalities receiving weights and measures services from the Department. A link can be sent to you if you would like to participate virtually. Otherwise you can call in using the call in number below.

Conference call in number: 608-571-2209
Phone Conference ID: 959 982 573#

Please notify the Bureau by June 15, 2022 if you intend to renew your contract with the Department (sign and return the enclosed contract), establish your own program, or contract with another municipality.

If you have any questions in advance of the meeting on May 12, please contact Stephen Peter at 608-224-4954.

MEMORANDUM OF AGREEMENT
WEIGHTS AND MEASURES INSPECTION

THIS AGREEMENT is entered into by and between the STATE OF WISCONSIN DEPARTMENT OF AGRICULTURE, TRADE AND CONSUMER PROTECTION, hereinafter referred to as the Department, and the MUNICIPALITY OF **JACKSON**, hereinafter referred to as the Municipality.

Pursuant to Wis. Stat. § 98.04(2), the Department agrees to furnish the services and perform the duties required to enforce the provisions of Wis. Stat. ch. 98 in the Municipality. The Department further agrees to report to the Municipality at least annually on the extent and nature of the services performed. It is understood and agreed that the Municipality shall not be required to maintain a department of weights and measures or appoint sealers of weights and measures while this agreement is in effect.

Pursuant to Wis. Stat. §§ 66.0301 and 98.04(2), the Municipality agrees to pay to the Department fees sufficient to cover the Department's annual costs of providing such services on a fiscal year basis that starts on July 1 and continues through the following June 30, with payment to be made not later than May 1 of the fiscal year of this agreement. Payment for services performed by the Department for less than any contract period shall be prorated accordingly.

This agreement shall be self-renewing for succeeding fiscal year periods, except that the sum to be paid to the Department for services rendered shall be subject to renegotiation for each succeeding contract period based on the cost of providing services. This agreement may be terminated at the end of any fiscal year by either party giving the other party written notice at least 60 days prior to July 1 of the following fiscal year. Annual fees payable to the Department shall be in the amount of **$800.00**, except as otherwise agreed upon for succeeding contract periods. Under Wis. Stat. § 98.04(2), a municipality may recover an amount not to exceed the cost of fees paid to the Department by assessing fees on the persons who receive services under the weights and measures program.

The parties have entered into this agreement effective the **1st day of July 2022**.

WISCONSIN DEPARTMENT OF
AGRICULTURE, TRADE AND CONSUMER
PROTECTION

By _____
Signature Date

Administrator
Division of Trade & Consumer Protection
(608) 224-4929

CHAPTER 98

WEIGHTS AND MEASURES

98.01 Definitions.
98.02 Systems of weights and measures; special units.
98.03 State standards; specifications and tolerances.
98.04 Municipalities.
98.05 Enforcement authority; measurement center laboratory.
98.06 Method of sale of commodities.
98.07 Declaration of quantity.
98.08 Price refunds; price information.
98.12 Sale of ice cream and similar frozen products.
98.13 Milk or cream tests; samples; patrons' statement.
98.14 Standardization of Babcock pipettes.
98.145 Licensing of milk and cream testers.
98.146 Licensing milk weighers and samplers.
98.15 False testing.
98.16 Vehicle scale operators; scale installation and testing.
98.18 Installing and servicing weights and measures.
98.21 Sale of bread.
98.22 Bulk deliveries sold in terms of weight and delivered by vehicle.
98.224 Vehicle tank meters.
98.225 Deliveries of certain liquid fuels.
98.245 Liquefied petroleum gas sales.
98.246 Petroleum product sales.
98.255 Reinspection; fee.
98.26 Prohibited acts; penalty; injunction.

Cross–reference: See definitions in s. 93.01.

98.01 Definitions. As used in this chapter, unless the context requires otherwise:

(1) "Incorrect" as applied to weights and measures and commodities includes any failure to comply with the requirements of this chapter or rules issued thereunder.

(2) "Inspector" means a state inspector of weights and measures.

(3) "Municipality" means a city or village.

(4) "Sealer" and "deputy sealer" means a sealer of weights and measures and deputy sealer of weights and measures of a municipality, respectively.

(5) "Sell", "sale" and "sold" include barter or exchange, and any offering or exposing for sale or possession with intent to sell.

(6) "Weight" means net weight when used in reference to a commodity.

(7) "Weights and measures" means weights and measures of every kind, instruments and devices for weighing and measuring, and any appliances and accessories used with any or all such instruments and devices, except meters for the measurement of electricity, gas (natural and manufactured) or water when the same are operated in a public utility system.

History: 1983 a. 189.

98.02 Systems of weights and measures; special units. **(1)** The system of weights and measures in customary use in the United States or the metric system of weights and measures shall be the only systems used for commercial purposes in this state. The definitions of basic units of weight and measure, the tables of weight and measure, and weights and measures equivalents, published by the national institute of standards and technology, shall govern weighing and measuring equipment and transactions in this state.

(2) "Barrel," when used in connection with fermented malt beverages, means a unit of 31 gallons. "Ton" means a unit of 2,000 pounds avoirdupois weight. "Cord," when used in connection with wood intended for fuel purposes, means the amount of wood that is contained in a space of 128 cubic feet when the wood is ranked and well stowed.

History: 1981 c. 79; 1989 a. 165; 2015 a. 196.

98.03 State standards; specifications and tolerances. **(1)** Weights and measures obtained by the state as standards and certified for use as such by the national institute of standards and technology shall be the state standards of weight and measure. They shall be in the custody of the department and shall be used only for verification of other standards.

(2) The department may issue rules governing the construction, installation, and use of commercial weights and measures and prescribing tolerances therefor. The specifications, tolerances, and regulations for commercial weighing and measuring devices issued by the national institute of standards and technology shall apply in this state except as modified by such rules or by statute.

History: 1989 a. 165; 2017 a. 22.

Cross–reference: See also ch. ATCP 92, Wis. adm. code.

98.04 Municipalities. **(1)** Except as provided in sub. (2), a municipality having a population of more than 5,000, according to the most recent population estimate made by the department of administration under s. 16.96, shall enforce the provisions of this chapter within its jurisdiction. For this purpose, a municipality shall establish a municipal department of weights and measures. Each municipal department of weights and measures shall have such number of qualified sealers or inspectors as will ensure compliance with this chapter. Municipal sealers or inspectors shall have the same authority as sealers or inspectors of the department of agriculture, trade and consumer protection. The selection of municipal sealers or inspectors shall be from a list of applicants whose qualifications have been certified by the state or local civil service agency under the rules of the agency. The municipality shall procure and keep at all times a complete set of standards of weight and measure conforming to the state standards and shall submit the standards for certification at regular intervals as required by the department of agriculture, trade and consumer protection. The municipality shall keep a complete record of its work and annually shall file a report thereof with the department of agriculture, trade and consumer protection. The municipality may enact ordinances that regulate weights and measures and that are not in conflict with this chapter or the rules of the department of agriculture, trade and consumer protection. The municipality may assess fees that do not exceed the actual cost of its weights and measures program.

(2) A municipality that is required to establish a department of weights and measures under sub. (1) may contract with the department of agriculture, trade, and consumer protection to enforce the provisions of this chapter within the municipality's jurisdiction instead of establishing its own department if the department of agriculture, trade and consumer protection agrees to enter into such a contract. The department of agriculture, trade and consumer protection may charge the municipality fees sufficient to cover the department's costs under the contract. A municipality may recover an amount not to exceed the cost of these fees by assessing fees on the persons who receive services under the weights and measures program.

History: 1983 a. 230; 1997 a. 27; 1999 a. 9.

98.05 Enforcement authority; measurement center laboratory. **(1)** There is hereby conferred upon sealers and inspectors of weights and measures, police power; such sealers and inspectors shall be provided with suitable badges or insignia

of authority and in the exercise of their functions shall exhibit the same, upon demand, to any person questioning their powers, and they are hereby empowered and authorized to make arrests, with or without formal warrant, of any persons violating any statute relating to weights and measures.

(2) Sealers or inspectors may enter and go into or upon any structure or premises, and may stop any person or vehicle for the purpose of enforcing this chapter. They shall inspect and test any weights and measures or commodities which are sold or used commercially as often as necessary to secure compliance with this chapter, and may seize as evidence, or reject and mark or tag as "rejected" those which are incorrect. A representative sample may be used as the basis to determine whether any lot is incorrect.

(3) Weights and measures and commodities that have been rejected may be confiscated and destroyed by a sealer or inspector if not corrected within 30 days or such longer period as the sealer or inspector may authorize, or if used or disposed of without the sealer's or inspector's written authorization.

(4) Sealers or inspectors may seal or mark with appropriate devices such weights and measures as are found upon inspection and test to be in conformance with this chapter.

(5) The department shall:

(a) Establish and maintain a measurement center laboratory for the testing and calibration of weights and measures; and

(b) Fix and collect charges sufficient to cover the cost for the testing and calibration done in the measurement center laboratory.

History: 1993 a. 16, 492.

98.06 Method of sale of commodities. (1) Commodities in liquid form shall be sold by liquid measure and commodities not in liquid form shall be sold by weight but liquid commodities may be sold by weight and commodities not in liquid form may be sold by count or measure if such methods are in general use and give accurate information as to the quantity of commodity sold.

(2) (a) Berries and small fruits may be sold by measure only if in containers having capacities of one–half dry pint, one dry pint or one dry quart.

(b) If a commodity is packaged in an aerosol container, it shall be sold by weight including the propellant.

(3) This section shall not apply to commodities sold in compliance with a state or federal law which prescribes another method of sale, or to commodities sold for immediate consumption on the premises where sold.

History: 1999 a. 83.

Cross–reference: See also ch. ATCP 91, Wis. adm. code.

98.07 Declaration of quantity. (1) No commodity which is marked, tagged or labeled, or for which a sign is displayed, with a selling price, shall be sold unless the weight, measure or count of the commodity is conspicuously declared on the commodity or its tag, label or sign, but a declaration of count is not required if the selling price is for a single unit, or a set or combination of commodities customarily sold to and understood by consumers as a single unit, or if the commodity is packaged prior to sale and the package contains 6 units or less which can be easily counted without opening the package.

(2) No commodity shall be wrapped or its container made, formed or filled so as to mislead the purchaser; nor shall the qualifying term "when packed", or the terms "jumbo", "giant" or "full", or words of similar import that tend to mislead the purchaser as to the amount of the commodity, be used in connection with a declaration of quantity.

(3) With respect to commodities packaged prior to sale, the department shall issue rules permitting reasonable variations from declared quantity which unavoidably occur in good packaging and distribution practices.

(4) In order to prevent consumer deception, the department shall prescribe, by rule, standards for determining and declaring weight, measure or count, including the conspicuousness of quantity declarations.

History: 1975 c. 308.

Cross–reference: See also chs. ATCP 90, 91, and 92, Wis. adm. code.

98.08 Price refunds; price information. (1) A person who uses an electronic scanner to record the price of a commodity or thing and who sells the commodity or thing at a price higher than the posted or advertised price of that commodity or thing at least shall refund to a person who purchases the commodity or thing the difference between the posted or advertised price of the commodity or thing and the price charged at the time of sale.

(2) A person who sells a commodity or thing and who uses an electronic scanner to record the price of that commodity or thing shall display, in a conspicuous manner, a sign stating the requirements of sub. (1).

History: 1995 a. 319.

98.12 Sale of ice cream and similar frozen products. Ice cream, ice milk, water ices or other frozen desserts of a similar nature packaged prior to sale shall be sold by liquid measure. This section does not apply if the products are packaged at time of sale at retail or sold in quantities of less than one–half liquid pint.

History: 1973 c. 178; 1983 a. 367; 1987 a. 78; 1999 a. 9.

98.13 Milk or cream tests; samples; patrons' statement. (1) The Babcock or other extraction tests shall be used to determine the milk fat content of milk or cream purchased by or sold to dairy plants, but the department may issue rules permitting the use of other methods or devices for testing and determining such milk fat content.

(2) Each sample used for testing shall be representative of the milk or cream from which taken. Composite samples shall consist of representative samples taken during a period not exceeding 16 consecutive days. The unused portion of tested samples shall be retained not less than 5 days after testing to enable retesting by the department.

(3) All purchasers of milk or cream from the producer, when using such milk fat tests to determine the value of any milk or cream received or bought by such purchaser, shall, when paying for such milk or cream, include an itemized statement to each patron showing the daily number of pounds of milk delivered, the total amount of butterfat content or test, transportation costs, and other charges and deductions for the period of time for which payment is made; except that the daily weights need not be shown on such statement if weight slips are furnished daily to producers.

(4) Whenever milk is sold under an agreement, express or implied, that the value of the milk shall be determined by its proportion of butter fat, the price to be paid shall be based on a 3.5 percent butter fat standard.

(5) To insure the accuracy of the milk fat tests prescribed herein the department shall issue rules governing the collection and care of samples, the conduct of tests and the keeping of test records.

History: 1997 a. 253.

98.14 Standardization of Babcock pipettes. (1) All bottles and pipettes used in measuring milk or milk products to determine the percentage of fat in the milk or milk products shall have clearly blown or otherwise permanently marked in the side of the bottle or pipette the word "Sealed", and in the side of the pipette or the side or bottom of the bottle the name, initials or trademark of the manufacturer and the manufacturer's designating number, which designating number shall be different for each manufacturer and may be used in identifying bottles. The designating number shall be furnished by the department upon application by the manufacturer and upon the filing by the manufacturer of a bond in the sum of $1,000 with sureties to be approved by the attorney general, conditioned upon conformance with the requirements of this section. A record of the bonds furnished, the desig-

nating number, and to whom furnished, shall be kept in the office of the department.

(2) Any manufacturer who sells Babcock milk, cream or butter test bottles or milk pipettes, for use in this state, that do not comply with the provisions of this section shall be subject to a penalty of $500 to be recovered by the attorney general in an action brought in the name of the people of the state against the offender's bondsmen. No dealer shall use, for the purpose of determining the percent of milk fat in milk or milk products, any bottles or pipettes that do not comply with the provisions of this section.

(3) The department shall prescribe specifications with which the glassware described in this section shall comply. The unit of graduation for all Babcock glassware shall be the true cubic centimeter or the weight of one gram of distilled water at 4 degrees centigrade.

(4) Sealers of weights and measures are not required to seal Babcock milk, cream or butter test bottles or milk pipettes marked as in this section provided, but they shall from time to time make tests of individual bottles used by the various firms in the territory over which they have jurisdiction in order to ascertain whether the above provisions are being complied with and they shall report immediately to the department violations found.

History: 1993 a. 492; 1997 a. 253.

98.145 Licensing of milk and cream testers. (1) To secure fair and accurate tests to producers and manufacturers for the determination of the basis of payment or for settlement for such milk or cream, or for the purpose of official inspection, or for the making of records of dairy production, persons making such milk fat tests shall be licensed by the department as herein provided.

(2) No person may engage as a tester of milk or cream to determine its value for payment or for the purpose of official inspection or for records of dairy production for the purposes described above unless the person holds a license issued by the department; but no such license is required of a licensed cheesemaker or buttermaker. The license shall expire biennially on October 31 of the 2nd year commencing after the date of issuance or renewal. Each application for milk tester license or renewal thereof shall be accompanied by a fee of $50, except that an individual who is eligible for the veterans fee waiver program under s. 45.44 is not required to pay the fee. Each application shall be made upon forms provided by the department. If the department conducts a reinspection of any milk or cream tested by a person licensed under this subsection due to any violation of any federal or state law which the department determines in a regularly scheduled inspection of milk or cream tested by that person, the department shall charge that person $25 for that reinspection.

(3) To qualify for a milk and cream tester's license the applicant shall not have an arrest or conviction record, subject to ss. 111.321, 111.322 and 111.335, shall furnish 2 references who have known the applicant for at least one year and shall give proof of ability to perform the necessary duties to the satisfaction of the department by satisfactorily passing a written examination pertaining to milk and cream sampling and care of samples and use of the Babcock test or other test method approved by the department; and by actual demonstration in the laboratory of his or her ability to determine accurately the milk fat content of milk and cream including special emphasis on the handling and testing of composite samples of milk and cream.

(4) Unless provision is made for the testing of milk or cream by a duly licensed tester as provided herein, no dairy plant shall receive any milk or cream unless at least one employee is a milk and cream tester licensee who shall be responsible for the care of samples and the testing of milk and cream and who shall be regularly assigned to the duty of making such tests.

(5) This section shall not be construed to require the licensing of city or village sanitary or dairy inspectors.

History: 1977 c. 216; 1981 c. 380; 1981 c. 391 s. 211; 1987 a. 27; 2011 a. 209.

98.146 Licensing milk weighers and samplers. (1) All persons except licensed cheesemakers and buttermakers taking weights and samples of milk in bulk tanks or measuring milk in bulk tanks to determine weight, on the farm premises where such milk is produced, shall be licensed by the department under this section or by an equivalent regulatory agency in another state, and no person who is not so licensed shall engage in such activities.

(2) (a) Each application for a license under this section or license renewal shall be made on forms provided by the department and shall be accompanied by the license fee required under sub. (4), except that an individual who is eligible for the veterans fee waiver program under s. 45.44 is not required to pay the fee. The license shall expire biennially on September 30 of the 2nd year commencing after the date of issuance or renewal. The applicant shall not have an arrest or conviction record, subject to ss. 111.321, 111.322 and 111.335, and shall give proof of ability to engage in such weighing and sampling to the satisfaction of the department by satisfactorily passing a written examination pertaining to such activities.

(b) If the department conducts a reinspection of any measurement by a person authorized to take weights and samples or to measure under sub. (1) due to any violation of any federal or state law which the department determines in a regularly scheduled inspection of that measurement, the department shall charge the person the reinspection fee required under sub. (4) for that reinspection.

(3) No dairy plant shall receive any milk required to be weighed and sampled by a person authorized to take weights and samples under sub. (1) unless it has been so weighed and sampled.

(4) The department may establish by rule the amount of license or reinspection fees required under sub. (2). Unless otherwise established by department rule, a license fee under sub. (2) is $40 and a reinspection fee under sub. (2) is $40.

History: 1977 c. 216; 1981 c. 380; 1981 c. 391 s. 211; 1987 a. 27; 1991 a. 39; 2011 a. 209; 2019 a. 152.

98.15 False testing. (1) No person shall manipulate, underread or overread or make any false determination by the Babcock test or any other test used for determining the value of milk or cream. No person shall make any false record or report of the results of any such test.

(2) A district attorney to whom any violation of this section is reported shall cause appropriate actions or proceedings to be instituted for the collection of a forfeiture or fine or for the enforcement of other remedies. In any enforcement action the court may, in addition to any other penalty provided, order restitution to any party injured by violation of this section. If the violator is convicted of a crime, restitution shall be in accordance with s. 973.20.

History: 1979 c. 264; 1987 a. 398.

Sub. (1) did not preclude prosecution for felony fraud under s. 943.20 (1) (d) when the state alleged that the defendant misrepresented the quality of milk sold. State v. Ploeckelman, 2007 WI App 31, 299 Wis. 2d 251, 729 N.W.2d 784, 06–1180.

98.16 Vehicle scale operators; scale installation and testing. (1) DEFINITIONS. In this section "vehicle scale" means a commercial scale that is designed to weigh loaded or unloaded highway, farm or industrial vehicles, except that it does not include a scale that is operated exclusively by this state.

(2) LICENSE FOR OPERATOR. (am) Except as provided in par. (dm), no person may operate a vehicle scale without an annual license from the department. A separate license is required for each scale. A license is not transferable between persons or scales. A license expires on March 31 annually.

(bm) The department shall provide a license application form for persons applying for a license. The form shall require all of the following:

1. The applicant's correct legal name and business address and any trade name under which the applicant proposes to operate the vehicle scale.

2. A description of the nature and location of the vehicle scale.

3. Other information reasonably required by the department for licensing purposes.

(cm) A license application shall be accompanied by all of the following fees and surcharges:

1. A license fee in the amount specified by the department by rule promulgated under sub. (4).

2. A license fee surcharge, if the department determines that within one year prior to submitting the license application the applicant operated a vehicle scale without a license as required by par. (am). The license fee surcharge is $200, except that the department may establish a different surcharge by rule promulgated under sub. (4). The department may not issue a license under this subsection to an operator if the operator has failed to pay a license fee surcharge assessed against the operator. Payment of the license fee surcharge does not relieve the applicant of any other civil or criminal liability for the operation of a vehicle scale without a license but shall not constitute evidence of violation of a law.

(dm) Paragraph (am) does not apply to a person who operates a vehicle scale only as an employee of a person who is required to hold a license to operate the scale under this subsection.

(2m) PERMIT FOR SCALE INSTALLATION OR CONSTRUCTION; VARIANCE. (a) No person may install or relocate a vehicle scale without a permit from the department. The department shall provide a permit application form for a person applying for a permit under this paragraph. An application for a permit under this paragraph shall be accompanied by a nonrefundable permit application fee in an amount established by the department by rule promulgated under sub. (4).

(b) A person who installs or relocates a vehicle scale shall comply with construction, operation, and maintenance standards and procedures established by the department by rule under sub. (4), except that the department may grant a variance from a construction standard if the department determines that the variance is justified by special circumstances. The department may impose conditions on the variance, including alternative construction standards, if the department determines the conditions are necessary. The department shall provide a variance application form for a person applying for a variance under this paragraph. An application for a variance under this paragraph shall be accompanied by a nonrefundable variance application fee in an amount established by the department by rule promulgated under sub. (4).

(3m) ANNUAL TESTING. (a) The owner or operator of a scale with a weighing capacity of 5,000 pounds or more used for the commercial weighing of commodities shall cause the scales to be tested and inspected at least annually for accuracy by a person licensed under s. 98.18 (1).

(b) A person conducting a test under par. (a) shall do all of the following:

1. Conduct the test and prepare a test report, according to rules promulgated by the department under sub. (4).

2. Provide a copy of the test report to the operator of the vehicle scale and, if required by rules promulgated by the department under sub. (4), to other persons.

(c) An operator of a vehicle scale shall file with the department a copy of each test report prepared regarding the vehicle scale not more than 15 days after the operator receives the test report. If an operator fails to file a report as required in this paragraph, the department may assess a testing surcharge against the operator. The department may not issue a license under sub. (2) to an operator if the operator has failed to pay a testing surcharge assessed against the operator. If an operator fails to pay a testing surcharge assessed against the operator within 120 days after the department assessed the surcharge, the department may revoke the operator's license to operate the vehicle scale for which the operator has been assessed the surcharge.

(d) If a test under this subsection shows that a vehicle scale is inaccurate, the scale may not be used until the inaccuracy is corrected and the scale is determined to be accurate by a subsequent test under this subsection.

(e) No person may falsify a test, test result, or test report under this subsection.

(f) This section does not apply to a railway scale used exclusively for the weighing of commodities on railroad track vehicles.

(4) RULES. The department shall promulgate rules to regulate the construction, operation, testing, and maintenance of vehicle scales, including a rule specifying the amount of the fee under sub. (2) (cm) 1. The department may promulgate rules to adjust fees and surcharges under subs. (2) (cm) 2. and (2m) (a) and (b) and to impose a testing surcharge upon a vehicle scale operator if the operator fails to file a vehicle scale test report as required by a rule promulgated by the department under this subsection.

History: 1993 a. 16; 1997 a. 27; 1999 a. 9; 2009 a. 28 ss. 2038 to 2054, 2063 to 2067; 2011 a. 263.

Cross–reference: See also ch. ATCP 92, Wis. adm. code.

98.18 Installing and servicing weights and measures.

(1) LICENSE REQUIRED. (a) Except as provided in par. (bm), no person may engage in the business of installing, servicing, testing or calibrating weights and measures without a license from the department. A license expires on December 31 annually.

(bm) Paragraph (a) does not apply to any of the following:

1. A person who installs, services, tests or calibrates weights and measures only as an employee of a person who is required under par. (a) to hold a license to perform those services.

2. An inspector or metrologist employed by this state, a county or a municipality to test or calibrate weights and measures.

(1d) LICENSE APPLICATION. An applicant for a license issued under sub. (1) (a) shall apply on a form provided by the department. The applicant shall provide on the form information that is reasonably required by the department for issuing licenses under this section. The license application shall be accompanied by the applicable fees under subs. (1h) and (1p).

(1h) LICENSE FEES. Unless the department establishes different fees by rule, the following annual license fees shall apply:

(a) If the applicant solely engages in installing, servicing, testing or calibrating weights and measures that the applicant owns, the applicant for a license under sub. (1) (a) shall pay a license fee in the amount of $100.

(b) If the applicant installs, services, tests or calibrates weights or measures for others, the applicant for a license under sub. (1) (a) shall pay all of the following:

1. A basic license fee of $200.

2. A supplementary license fee of $50 for each additional business location if the applicant operates from more than one business location.

(1m) FEE EXEMPTION. Notwithstanding sub. (1h), the department may not require an individual who is eligible for the veterans fee waiver program under s. 45.44 to pay a license fee.

(1p) SURCHARGE FOR OPERATING WITHOUT A LICENSE. An applicant for a license under sub. (1) (a) shall pay a license fee surcharge of $200 in addition to the license fee if the department determines that within one year before making the application the applicant violated sub. (1) (a). Payment of this surcharge does not relieve the applicant of any other civil or criminal liability that the applicant may incur because of the violation of sub. (1) (a), but does not constitute evidence of violation of a law.

(1t) LICENSE CONTINGENT ON FEE PAYMENT. The department may not issue or renew a license under sub. (1) (a) unless the applicant pays all fees required under subs. (1h) and (1p) as set forth in a statement issued by the department. The department shall refund a fee paid under protest if the department determines that the fee was not required to be paid under this section.

(2) RULES. The department may promulgate rules to establish license fees under sub. (1h) and to regulate the installation, servic-

ing, testing and certification of weights and measures. The rules may include record–keeping and reporting requirements.

(3) PROHIBITED PRACTICES. A person who installs, services, tests or calibrates weights and measures may not do any of the following:

(a) Install or adjust a weight or measure to make the weight or measure incorrect or to cause the weight or measure to violate this chapter or rules promulgated under this chapter.

(b) Misrepresent that a weight or measure is correct.

(c) Use any test weight or measure that has not been inspected, tested and approved by the department or by a laboratory certified by the national institute of standards and technology.

History: 1993 a. 16; 1997 a. 27; 2011 a. 209.

98.21 Sale of bread. (1) Except as provided in sub. (2), no person may manufacture for sale in this state, offer to sell or sell bread unless the bread is sold by weight.

(2) Subsection (1) does not apply to stale bread if the bread is conspicuously marked "stale bread" or is placed in a container conspicuously marked "stale bread" and sold as and for stale bread.

History: 1971 c. 113; 1983 a. 14, 329; 1993 a. 492; 1999 a. 9.

98.22 Bulk deliveries sold in terms of weight and delivered by vehicle. (1) When a commodity in bulk is delivered by vehicle to an individual purchaser and the commodity is sold in terms of weight units, the delivery shall be accompanied by a duplicate delivery ticket with the following information clearly stated in ink or by means of other indelible marking equipment:

(a) The name and address of the vendor.

(b) The name and address of the purchaser.

(c) The net weight of the delivery expressed in pounds.

(d) The gross and tare weights of the delivery if the net weight of the delivery is derived from determination of gross and tare weights.

(2) Where milk is picked up at farms, only the identity of the vendor and the net weight need be stated.

(3) One of the duplicate delivery tickets required under sub. (1) shall be retained by the vendor, and the other shall be delivered to the purchaser at the time of delivery of the commodity, or shall be surrendered, on demand to the inspector or sealer, who may retain it as evidence and issue a weight slip in lieu thereof for delivery to the purchaser. If the purchaser carries away the purchase, the vendor shall be required only to give to the purchaser at the time of sale a delivery ticket stating the number of pounds of commodity delivered to the purchaser. If the commodity is to be weighed by the purchaser, the purchaser shall furnish the vendor the duplicate delivery ticket provided for in this section.

History: 1993 a. 492; 1995 a. 225.

98.224 Vehicle tank meters. (1) DEFINITION. In this section, "vehicle tank meter" means a commercial meter used to measure liquid fuel, as defined in s. 98.225 (1).

(2) OPERATOR LICENSED. (a) Except as provided in par. (e), no person may operate a vehicle tank meter without an annual license from the department. An annual license expires on October 31. A separate license is required for each vehicle tank meter. A license is not transferable between persons or vehicle tank meters.

(b) To obtain a license under par. (a), a person shall submit an application on a form provided by the department. The application shall include all of the following:

1. The applicant's correct legal name and business address, and any trade name under which the applicant proposes to operate the vehicle tank meter.

2. A description of the vehicle tank meter, including the serial number or other identifying marks that appear on the meter and the vehicle on which the meter is mounted.

3. The fees and surcharges required under par. (c).

4. Other relevant information reasonably required by the department for licensing purposes.

(c) An application under par. (b) shall include all of the following fees and surcharges:

1. A license fee established by the department by rule.

2. A surcharge established by the department by rule, if the department determines that within one year prior to submitting the application, the applicant operated the vehicle tank meter without a license required under par. (a). The department may not issue a license under this subsection to an operator if the operator has failed to pay a surcharge under this subdivision assessed against the operator.

3. A surcharge established by department rule if the department determines that, within one year prior to submitting the application, the applicant failed to comply with the reporting requirement under sub. (3). The department may not issue a license under this subsection to an operator if the operator has failed to pay a surcharge under this subdivision assessed against the operator.

4. Reinspection fees, if any, required under s. 98.255.

(d) Payment of a surcharge under par. (c) 2. or 3. does not relieve the applicant of any other civil or criminal liability for a law violation, but is not evidence of a violation of this section.

(e) Paragraph (a) does not apply to an individual who operates a vehicle tank meter only as an employee of a person who is required to hold a license under par. (a) to operate that vehicle tank meter.

(3) TESTING AND REPORTING. The operator of a vehicle tank meter shall have the meter tested for accuracy at least annually by a person who is licensed under s. 98.18 (1) to perform the testing. The operator, or the tester on behalf of the operator, shall report the results of each test to the department within 30 days after the testing is completed. The operator shall retain a test report for at least 3 years.

(4) RULES. (a) The department shall promulgate rules that establish all of the following:

1. License fee and surcharge amounts under sub. (2) (c).

2. Standards for the testing, reporting, and record keeping required under sub. (3).

(b) The department may promulgate rules that establish standards for the construction, operation, and maintenance of vehicle tank meters.

History: 2009 a. 28.

98.225 Deliveries of certain liquid fuels. (1) In this section, "liquid fuel" means gasoline, kerosene, fuel oil, diesel fuel or alternate fuels, as defined in s. 78.39 (1).

(2) No person may sell liquid fuel by liquid measure and deliver it by a vehicle equipped with a pump and metering device unless the pump and metering device is equipped with a delivery ticket printer. Except as provided in sub. (3), the seller shall, at the time of delivery, either provide a copy of the delivery ticket printed by the delivery ticket printer to the purchaser or leave a copy at the place of delivery. The delivery ticket shall contain all of the following information:

(a) The name and address of the seller.

(b) The name and address of the purchaser.

(c) A description of the liquid fuel delivered.

(d) The meter reading showing the volume of liquid fuel delivered.

(3) If there is a malfunction with the delivery ticket printer, the seller shall, at the time of delivery, either provide the purchaser or leave at the place of delivery the information required under sub. (2) in written form.

History: 1993 a. 234.

98.245 Liquefied petroleum gas sales. (1) SALES EXCEPT BY UNITS OF MEASUREMENT PROHIBITED. It is unlawful to sell or

offer to sell at retail any liquefied petroleum gas except by avoirdupois weight, specified in pounds; liquid measure, specified in gallons; or vapor measure, specified in cubic feet, or such other units as may be approved by the department.

(2) PACKAGES TO BEAR TARE WEIGHT. When liquefied petroleum gas is sold or offered for sale at retail by weight, in portable containers, the tare weight of the container shall be plainly and conspicuously marked on the outside of the container. Tare weight shall not be construed to include the valve protecting cap, which shall be removed when weighing. It is unlawful to sell or offer or expose for sale liquefied petroleum gas in packages or containers which do not bear a statement as to tare weight as required by this section, or which packages or containers bear a false statement as to tare weight, provided packages intended to be used only once and clearly marked with the statement "not refillable" are exempt from this tare weight requirement.

(3) REFILLING; CREDIT. When liquefied petroleum gas is sold by the package or container, either by a refilling of a container or an exchange of containers, the vendor shall give the purchaser full credit for the unused liquid remaining in a container being exchanged or refilled.

(4) CORRECTION TO TEMPERATURE OF VOLUME SOLD. (a) When liquefied petroleum gas is sold or delivered to a consumer as a liquid and by liquid measurement the volume of liquid so sold and delivered shall be corrected to a temperature of 60 degrees Fahrenheit through use of an approved volume correction factor table, or through use of a meter that is equipped with a sealed automatic compensating mechanism and that has been tested as required under sub. (8). All sale tickets shall show the delivered gallons, the temperature at the time of delivery and the corrected gallonage, or shall state that temperature correction was automatically made.

(b) When liquefied petroleum gas is sold or delivered to a consumer in vapor form by vapor measurement, the volume of vapor so sold and delivered shall be corrected to a temperature of 60 degrees Fahrenheit through the use of a meter that is equipped with a sealed automatic temperature compensating mechanism. This paragraph shall apply to all meters installed for use in the vapor measurement of liquefied petroleum gas in vapor form after May 24, 1978. This paragraph does not prohibit the continued use of meters previously installed without a self–sealing automatic temperature compensating mechanism, but no such meter may be continued in use after January 1, 1986, unless brought into compliance with this paragraph. Subsection (8) does not apply to meters used to sell or deliver liquefied petroleum gas that are subject to this paragraph.

(5) SALES TICKETS TO SHOW QUANTITY SOLD. Sales tickets or invoices shall show the quantity of liquefied petroleum gas sold, expressed in pounds, or gallons as set forth in sub. (4), or cubic feet, or other unit approved by the department. When vapor meters reading in approved units other than cubic feet are used, the invoice shall clearly indicate to the purchaser a factor to convert to cubic feet.

(6) PUMPS AND METERS. (a) No person may sell liquefied petroleum gas and deliver it by a vehicle equipped with a pump and meter unless the meter is equipped with a delivery ticket printer and has been tested as required under sub. (8). Except as provided in par. (b), the seller shall, at the time of delivery, either provide a copy of the delivery ticket printed by the delivery ticket printer to the purchaser or leave a copy at the place of delivery. The delivery ticket shall contain all of the following information:

1. The name and address of the seller.

2. The name and address of the purchaser.

3. The meter reading showing the volume of liquefied petroleum gas delivered.

(b) If there is a malfunction with the delivery ticket printer, the seller shall, at the time of delivery, either provide the purchaser or leave at the place of delivery the information required under par. (a) in written form.

(7m) METER OPERATORS LICENSED. (a) No person may operate a meter to determine the amount of liquefied petroleum gas sold or delivered under sub. (4) (a) unless the person holds an annual license from the department under this subsection. An annual license expires on November 30. A separate license is required for each liquefied petroleum gas meter. A license is not transferable between persons or meters.

(b) To obtain a license under par. (a), a person shall submit an application on a form provided by the department. The application shall include all of the following:

1. The applicant's correct legal name and business address, and any trade name under which the applicant proposes to operate the liquefied petroleum gas meter.

2. A description of the liquefied petroleum gas meter, including the serial number or other identifying marks that appear on the meter, and if applicable, the vehicle on which the meter is mounted.

3. The fees and surcharges required under par. (c).

4. Other relevant information reasonably required by the department for licensing purposes.

(c) An application under par. (b) shall include the following fees and surcharges:

1. A license fee established by department rule.

2. A surcharge established by department rule, if the department determines that, within one year prior to submitting the application, the applicant operated the liquefied petroleum gas meter without a license required under par. (a). The department may not issue a license under this subsection to an operator if the operator has failed to pay a surcharge under this subdivision assessed against the operator.

3. A surcharge established by the department by rule if the department determines that, within one year prior to submitting the application, the applicant failed to comply with a test reporting requirement under sub. (8). The department may not issue a license under this subsection to an operator if the operator has failed to pay a surcharge under this subdivision assessed against the operator.

4. Reinspection fees, if any, required under s. 98.255.

(d) Payment of a surcharge under par. (c) 2. or 3. does not relieve the applicant of any other civil or criminal liability for a law violation, but is not evidence of a violation of this section.

(e) Paragraph (a) does not apply to an individual who operates a liquefied petroleum gas meter only as an employee of a person who is required to hold a license under par. (a) to operate that meter.

(8) TESTING AND REPORTING. A person that is required to hold a license under sub. (7m) to operate a liquefied petroleum gas meter shall have the meter tested for accuracy, at least annually, by a person who is licensed under s. 98.18 (1) to perform the test. The meter operator, or the tester on behalf of the meter operator, shall report the results of each test to the department within 30 days after the testing is completed. The operator shall retain a record of each test for at least 3 years.

(9) RULES. (a) The department shall promulgate rules that establish all of the following:

1. License fee and surcharge amounts under sub. (7m) (c).

2. Standards for the testing, reporting, and record keeping required under sub. (8).

(b) The department may promulgate rules that establish standards for the construction, operation, and maintenance of liquefied petroleum gas meters.

History: 1975 c. 308; 1977 c. 393; 1993 a. 234; 1995 a. 183; 1997 a. 27; 2009 a. 28.

98.246 Petroleum product sales. **(1)** In this section, "petroleum products" has the meaning given under s. 168.01 (3).

(2) Petroleum products may not be sold from a terminal or storage facility in this state on any basis other than gross volume without correction for temperature.

History: 1983 a. 251; 2013 a. 20.

98.255 Reinspection; fee. **(1)** If the department reinspects a weight or measure because the department has found a violation of this chapter or a rule promulgated under this chapter, the department may charge the operator of the weight or measure a reinspection fee.

(2) The department shall establish the amount of the reinspection fee under sub. (1) by rule and may establish different reinspection fees for different types of weights and measures. The amount of a reinspection fee for a weight or measure may not exceed the department's average cost to reinspect that type of weight or measure.

(3) A reinspection fee under sub. (1) is payable after the reinspection is completed and is due upon written demand from the department. The department may issue a demand for payment when it issues an annual license application form to the operator of the weighing or measuring device.

History: 2009 a. 28.

98.26 Prohibited acts; penalty; injunction. **(1)** A person who does any of the following acts shall forfeit not less than $100 nor more than $500 for the first offense and not less than $200 nor more than $1,000 for a subsequent offense. A person who intentionally does any of the following acts shall be fined not more than $10,000 or imprisoned not more than 9 months or both:

(a) Hinders, obstructs or impersonates a sealer or inspector.

(b) Uses or has in possession for use in buying or selling any commodity or service, or sells, any incorrect weight or measure or causes a weight or measure to be incorrect.

(c) Represents in any manner a false quantity or price in connection with the purchase or sale, or any advertising thereof, of any commodity, thing or service.

(d) Uses or disposes of any rejected weight or measure, or commodity, or removes therefrom any official tag, seal, stamp or mark, without written authority from a sealer or inspector.

(e) Violates s. 98.15 (1).

(f) Violates any other provision of this chapter or any rules promulgated under this chapter for which no specific penalty is prescribed.

(2) Upon application of the department or a municipality, a circuit court may grant a temporary or permanent injunction restraining any person from violating any provision of this chapter.

History: 1979 c. 264; 1987 a. 250; 1995 a. 319.

Cross-reference: See also chs. ATCP 91 and 92, Wis. adm. code.

MATTER OF:

TO: Chief Vossekuil
FROM: Sgt. Brinks & Ofc. Welch
DATE: 05/01/2022
SUBJECT: Physical Fitness Incentive Proposal Third Draft

Chief-
The physical fitness incentive has been further discussed with the union and we have the following proposal:

PHYSICAL FITNESS PROGRAM

Section X.01: In recognition of the importance that physical fitness plays in the general health and wellbeing of police officers and in consideration of the relationship between good health, wellbeing, and effective police services, the following physical fitness program is implemented effective the date of this MOU.

A. Participation: The physical fitness program shall be voluntary

B. Frequency: The test will be given twice (2x) a year, once in the spring and once in the fall. Personnel will be notified at least 1 month in advance of the actual test dates if practicable.

C. Medical Certification: All employees are responsible for determining their fitness to participate in the testing process.

D. Fitness Coordinator: The physical fitness coordinator(s) designated by the Chief of police will be the governing body for the physical fitness testing. The coordinator(s) will conduct the actual testing and certify the test results.

E. Assessment Testing: The physical fitness program shall contain five (5) events.

1. Cardiovascular Endurance - 1.5 mile run
    a. Test will be conducted on a circular track or other suitable area
    b. Each participant will be timed for a distance of 1.5 miles
    c. A time of 16:57 or less is a passing score
2. Upper Body Strength – Push-Ups
    a. One minute time limit
    b. 23 push-ups within the time limit is a passing score

3. Abdominal Strength – Sit-ups
    a. One minute time limit
    b. 30 sit-ups within the time limit is a passing score

4. Anaerobic Power – Vertical Jump
    a. While standing, both arms outstretched overhead next to wall will determine starting point.
    b. Vertically jump with arm reaching as high on the wall as possible
    c. Best of three attempts will be scored
    d. A jump height of 14 inches or more is a passing score

5. Anaerobic Power – 300 Meter Run
    a. Test will be conducted on a circular track or other suitable area
    b. Each participant will be timed for a distance of 300 meters
    c. A time of 68 seconds or less is a passing score

F. Benefits and Incentive: Officers who choose to participate must take the assessment at least once a year. Officers who do not pass all tests in the spring and choose to try again in the fall must retake all tests. If an officer fails to pass all tests in both attempts, the better score will stand.

If all tests are passed, a fitness incentive of $500 will be paid to the officer. If all but one test is passed, a fitness incentive of $250 will be paid to the officer. If all but two tests are passed, a fitness incentive of $200 will be paid to the officer. Officers are not eligible to earn two incentives (I.E. pass all tests in the spring and fall and get $1,000).

Employees who voluntarily participate in the program and achieve a level of passing or acceptable as listed above shall receive their designated fitness incentive on the first paycheck in December of each year. An employee who resigns, retires, or is terminated within eight (8) weeks of testing will forfeit the incentive reimbursement.

G. Physical Fitness Testing Compensation: Each employee who voluntarily participates in the physical fitness testing shall be entitled to two (2) hours of compensatory time off if the employee participates in the testing procedure while off duty. Employees who participate in the voluntary physical fitness testing shall be considered on duty and eligible for workers compensation if they incur an injury. However, the employer and association agree that any preparation for the actual test will not be considered on duty time and as such, will not qualify an employee for workers compensation if they sustain an injury during their regular off duty workouts.

H. Physical Fitness Test Result Records: The recorded test results of the employees who voluntarily participate in the physical fitness program shall be kept in the medical records file of the Jackson Police Department. The employer agrees that the test results and the participation of an employee in the voluntary physical fitness program shall not be used as a criteria for any future promotions or assignments.

Respectfully submitted,

903

#913

VILLAGE OF JACKSON

Taking the lead in Washington County.

Memo

To: Jen Keller, Village Administrator

From: Brian W. Kober, P. E., Director of Public Works BWK

Subject: Improving STH 60 (Main St) & Eagle Drive Intersection

Date: April 22, 2022

CC: Board of Public Works; Village Board

Per the request of WisDOT, the Village of Jackson hired SRF Consulting to complete an ICE (Intersection Control Evaluation) Report for the intersection of STH 60 (Main Street) & Eagle Drive. After five months of review by WisDOT, they have responded with the option for the Village of Jackson to improve the intersection with the resurfacing project, per the six requirements as described in the April 14, 2022, email. They have not official approved the ICE Report.

The review time and outcome by WisDOT are very disappointing, although, the Village has a great opportunity to improve the intersection. We always knew that the Village would be responsible for the funding, however by having the intersection improvement occur during the resurfacing project there is a cost savings on the engineering and timeframe of approvals with the State Agencies. Only a few Engineering Firms are qualified by WisDOT to design a Roundabout intersection, and SRF Consulting is not on that list.

The Village has requested a design quote from DAAR Engineering, the engineering firm that is the designer hired by WisDOT for the resurfacing project. Due to the timeframe of WisDOT response (Art Baumann's Email) and the information for the meetings packet, the quote was not received in time for proper review by staff. Once the quote is received and reviewed, the quote from DAAR Engineering will be emailed to the Board for review.

If you have any questions, please let me know.

Brian W. Kober, P.E.

W194N16660
Eagle Drive
Jackson, WI 53037
Phone: 262-677-0707
Fax: 262-677-8770

Mailing Address:
P.O. Box 637

www.villageofjackson.com

Brian Kober

From: Baumann, Art - DOT <Art.Baumann@dot.wi.gov>
Sent: Thursday, April 14, 2022 7:45 AM
To: Brian Kober
Cc: Shaffer, Vida - DOT; Lukasz, Stan
Subject: RE: ICE Report for STH 60 and Eagle Drive Intersection
Attachments: RE: 2310-13-70 RAB to the East

Follow Up Flag: Follow up
Flag Status: Flagged

Brian,
After further discussion within WisDOT, we have determined that the Village of Jackson would have to perform the following to be able to tie the construction of the proposed roundabout at WIS 60 & Eagle with our WIS 60 resurfacing project.

1. Enter into a State Municipal Agreement to establish WisDOT design and construction I.D.s (WisDOT will provide after Village has provided written confirmation that they want to proceed). These I.D.s will be 100% Funded by the Village of Jackson.
2. Hire a consultant to prepare the plan set and perform all necessary items required for a WisDOT project. All steps would have to conform with the WisDOT FDM. The Village shall hire a qualified consultant to prepare the plans. It is strongly recommended that the selected consultant have prepared plans to WisDOT standards previously.
3. Prepare, submit, and obtain the necessary approvals for the requisite environmental documents (see attached e-mail for further information).
4. Hold the necessary Public Involvement meetings for the project. The board meetings that have been held that you provided information on are not sufficient.
5. Perform all necessary coordination with utilities to relocate their facilities as needed.
6. Purchase all right-of-way needed to construct the roundabout.

If the projects are tied, WisDOT would end its resurfacing project at the west end of the roundabout intersection approach limits and the Village would be responsible for all costs from that point to the east limits of the roundabout intersection approach.

All these items will need to be completed by May 1, 2023 (PS&E submittal) for the roundabout project to be attached to the WIS 60 resurfacing project. If the Village of Jackson does not believe that they can meet this schedule, or does not want to follow the WisDOT process, then the best way to implement the roundabout would be through a permit project. A permit project may not be allowed to be constructed at the same time as the resurfacing project.

Please advise as soon as possible on if the Village wants to pursue the WisDOT tied project as we will need to get the agreement and project I.D.s in place.

Art Baumann
Traffic Operations Engineer
Art.Baumann@dot.wi.gov
(262) 548-6707

From: Brian Kober <brian.kober@villageofjacksonwi.gov>
Sent: Friday, March 18, 2022 11:46 AM
To: Baumann, Art - DOT <Art.Baumann@dot.wi.gov>

Cc: Shaffer, Vida - DOT <Vida.Shaffer@dot.wi.gov>; Lukasz, Stan <stan.lukasz@daarcorp.com>
Subject: RE: ICE Report for STH 60 and Eagle Drive Intersection

CAUTION: This email originated from outside the organization.
Do not click links or open attachments unless you recognize the sender and know the content is safe.

Art,

Please find the two affidavits for the two said meetings.

Please do not hesitate to ask if you need anything else.

Brian W. Kober. P.E.
Director of Public Works/Village Engineer
Village of Jackson
W194 N16660 Eagle Drive
PO Box 637
Jackson, WI 53037
Phone: 262-677-0707
Fax: 262-677-8770

From: Baumann, Art - DOT <Art.Baumann@dot.wi.gov>
Sent: Thursday, March 17, 2022 9:43 AM
To: Brian Kober <brian.kober@villageofjacksonwi.gov>
Cc: Shaffer, Vida - DOT <Vida.Shaffer@dot.wi.gov>; Lukasz, Stan <stan.lukasz@daarcorp.com>
Subject: RE: ICE Report for STH 60 and Eagle Drive Intersection

Brian,
Can you provide information on how the Village posted the Public Works and Village Board meetings? This may be critical to determine if additional public involvement would be needed as part of the environmental process.

Art Baumann
Traffic Operations Engineer
Art.Baumann@dot.wi.gov
(262) 548-6707

From: Stan Lukasz <stan.lukasz@daarcorp.com>
Sent: Wednesday, March 16, 2022 12:55 PM
To: Brian Kober <brian.kober@villageofjacksonwi.gov>
Cc: Baumann, Art - DOT <Art.Baumann@dot.wi.gov>; Shaffer, Vida - DOT <Vida.Shaffer@dot.wi.gov>
Subject: Re: ICE Report for STH 60 and Eagle Drive Intersection

CAUTION: This email originated from outside the organization.
Do not click links or open attachments unless you recognize the sender and know the content is safe.

In the potential event that the project is tied to the federally funded STH 60 resurfacing, is this form PI acceptable for CEC purposes?It has been explained to Brian several time pin the past that proper public notice and opportunity for public comment is required, if tied to the resurfacing project. I am not sure committee meetings and discussion at a public meeting had proper notice to the public.

Just a question at this point.

Stan Lukasz, PE
DAAR Engineering, Inc.
Sent from my iPhone

On Mar 16, 2022, at 11:22 AM, Brian Kober <brian.kober@villageofjacksonwi.gov> wrote:

Art,

Thanks for the quick response, and getting closer to completing the report.

The Village of Jackson will make the recommended changes. About public input, the Village has discuss the intersection improvement at the latest Board of Public Works meeting held on Tuesday, February 22, 2022. The agenda and minutes are part of this email. The Village also had the item for discussion and open for public comment at the December 2021 Village Board meeting. Would the meetings meet the requirement of public input? If possible we could have the report finalized this week.

Please let us know how to proceed.

Thanks,

Brian W. Kober. P.E.
Director of Public Works/Village Engineer
Village of Jackson
W194 N16660 Eagle Drive
PO Box 637
Jackson, WI 53037
Phone: 262-677-0707
Fax: 262-677-8770

From: Baumann, Art - DOT <Art.Baumann@dot.wi.gov>
Sent: Tuesday, March 15, 2022 9:35 AM
To: Brian Kober <brian.kober@villageofjacksonwi.gov>
Cc: Lukasz, Stan <stan.lukasz@daarcorp.com>; Shaffer, Vida - DOT <Vida.Shaffer@dot.wi.gov>; Jeff Knudson <jknudson@srfconsulting.com>; Jen Keller <jen.keller@villageofjacksonwi.gov>; Malicki, Daniel M - DOT <Daniel.Malicki@dot.wi.gov>
Subject: RE: ICE Report for STH 60 and Eagle Drive Intersection

Brian,

The updated WIS 60 & Eagle Drive ICE report has been reviewed by our Bureau of Traffic Operations in Madison. WisDOT is willing to defer the choice of traffic control at this intersection to the Village, but requests that an updated ICE report be provided after public input is received and the Village has

decided on its preferred form of traffic control. In addition to including the updated traffic control recommendation (if revised), the following should be updated within the ICE report:

- The Safety Performance Measures table on page 11 of the PDF shows the predicted safety number for the signal alternative when it should be the roundabout numbers.
- For the IHSDM analysis of the signal, the number of alcohol sales establishments within 1000 feet of the intersection should be '2'.
- Highlight the approximate right-of-way needs on both the conceptual drawings.
- Under the roundabout alternative, consider extending the raised median on the south leg of the intersection.
- Address the comments included in the attachment.

Please let me know if you have any questions.

Art Baumann
Traffic Operations Engineer
Art.Baumann@dot.wi.gov
(262) 548-6707

From: Baumann, Art - DOT <Art.Baumann@dot.wi.gov>
Sent: Thursday, March 03, 2022 10:47 AM
To: Brian Kober <brian.kober@villageofjacksonwi.gov>
Cc: Lukasz, Stan <stan.lukasz@daarcorp.com>; Shaffer, Vida - DOT <Vida.Shaffer@dot.wi.gov>; Jeff Knudson <jknudson@srfconsulting.com>; Jen Keller <jen.keller@villageofjacksonwi.gov>; Malicki, Daniel M - DOT <Daniel.Malicki@dot.wi.gov>
Subject: RE: ICE Report for STH 60 and Eagle Drive Intersection

Brian,
The ICE Report has been submitted to our Bureau of Traffic Operations in Madison for their review and approval. We hope to get a response back from them in the next few weeks.

Art Baumann
Traffic Operations Engineer
Art.Baumann@dot.wi.gov
(262) 548-6707

From: Brian Kober <brian.kober@villageofjacksonwi.gov>
Sent: Friday, February 11, 2022 9:45 AM
To: Baumann, Art - DOT <Art.Baumann@dot.wi.gov>
Cc: Lukasz, Stan <stan.lukasz@daarcorp.com>; Shaffer, Vida - DOT <Vida.Shaffer@dot.wi.gov>; Jeff Knudson <jknudson@srfconsulting.com>; Jen Keller <jen.keller@villageofjacksonwi.gov>; Malicki, Daniel M - DOT <Daniel.Malicki@dot.wi.gov>
Subject: RE: ICE Report for STH 60 and Eagle Drive Intersection

CAUTION: This email originated from outside the organization.
Do not click links or open attachments unless you recognize the sender and know the content is safe.

Art,

Please find the updated dt1887 form per your request. The Phase II ICE Report has become a large file, so a separate email from Jeff Knudson, SRF Consulting will be sent with a link to download the file.

The Village will wait the review and the next steps as directed by WisDOT on how to proceed.

If you have any questions please do not hesitate to ask.

Brian W. Kober. P.E.
Director of Public Works/Village Engineer
Village of Jackson
W194 N16660 Eagle Drive
PO Box 637
Jackson, WI 53037
Phone: 262-677-0707
Fax: 262-677-8770

From: Baumann, Art - DOT <Art.Baumann@dot.wi.gov>
Sent: Thursday, February 3, 2022 2:34 PM
To: Brian Kober <brian.kober@villageofjacksonwi.gov>
Cc: Lukasz, Stan <stan.lukasz@daarcorp.com>; Shaffer, Vida - DOT <Vida.Shaffer@dot.wi.gov>; Jeff Knudson <jknudson@srfconsulting.com>; Jen Keller <jen.keller@villageofjacksonwi.gov>; Malicki, Daniel M - DOT <Daniel.Malicki@dot.wi.gov>
Subject: RE: ICE Report for STH 60 and Eagle Drive Intersection

Thank you for providing the Phase II ICE report for the WIS 60 & Eagle Drive intersection. We have reviewed the ICE and have the following comments:

- The 2015 crashes should be removed from the Existing Crash Information table and crash diagram. The crash list should be limited to the most recent five complete years of data (2016-2020)
- The signal warrant analysis should be updated to reflect the following:
    - The number of lanes along Eagle Drive should be set to "2 or more lanes".
    - The speeds should be the current 85th-percentile speeds on the approaches (40 mph along WIS 60, 30 mph along Eagle Drive).
    - The "In built-up area of isolated community of < 10,000 population?" drop-down should be set to "Yes".
    - The "% Right Turns Included" "From East (WB)" should be 100%.
    - Run the warrants using the 2020 turning movement count volumes. If the warrants are not met, use the 2015 turning movement count for the analysis (attached).
- WIS 60 is a Wisconsin Designated Long Truck Route.
- Update the signal design and cost estimate to reflect the following:
    - Two-lane north and south approaches, each with an exclusive left-turn lane and a shared through/right-turn lane.
    - Turn lane lengths should be determined using FDM 11-25-2.2/2.3.
    - The HMA and aggregate quantities should be updated to reflect that the existing pavement can be used for most of the intersection.
- Update the roundabout design and cost estimate to reflect the standards outlined in FDM 11-26.

- Access impacts would be expected on the north and south approaches under the roundabout alternative due to the splitter islands.
- Include the volume tables for the signal warrant analyses.
- Provided the Lanes/Volumes/Queues reports for both the stop-control and signal alternatives.
- Comments on the analysis are included on the attached dt1887 form.

Please provide an updated Phase II ICE report and the corresponding analysis files for review and approval. If the desire is to include the WIS 60/Eagle Drive intersection improvements with the upcoming WisDOT project along WIS 60, the updated ICE will need to be resubmitted by Friday, February 11th to keep the project on schedule.

Art Baumann
Traffic Operations Engineer
Art.Baumann@dot.wi.gov
(262) 548-6707

From: Brian Kober <brian.kober@villageofjackson.com>
Sent: Friday, December 17, 2021 4:56 PM
To: Baumann, Art - DOT <Art.Baumann@dot.wi.gov>
Cc: Lukasz, Stan <stan.lukasz@daarcorp.com>; Shaffer, Vida - DOT <Vida.Shaffer@dot.wi.gov>; Jeff Knudson <jknudson@srfconsulting.com>; Jen Keller <jen.keller@villageofjackson.com>
Subject: ICE Report for STH 60 and Eagle Drive Intersection

CAUTION: This email originated from outside the organization.
Do not click links or open attachments unless you recognize the sender and know the content is safe.

Art,

At the December 14, 2021 Village Board meeting, the Village Board approved the ICE Report created by SRF Consulting for the intersection of Eagle Drive and STH 60 (Main Street) for review by WisDOT.

Please find attached the ICE Report. The Village will wait the review and the next steps directed by WisDOT on how to proceed.

If you have any questions please do not hesitate to ask.

Brian W. Kober. P.E.
Director of Public Works/Village Engineer
Village of Jackson
W194 N16660 Eagle Drive
PO Box 637
Jackson, WI 53037
Phone: 262-677-0707
Fax: 262-677-8770

EMAIL ATTACHED TO ART BAUMANN'S EMAIL SENT ON 4/14/2022

From: McElmeel, Timothy J - DOT
To: Burns, Roslin - DOT; Flower, Cynthia R - DOT; Baumann, Art - DOT
Cc: Shaffer, Vida - DOT; Wierzchowski, Casey W - DOT; Shahin, Reem - DOT; Higdon, Hans - DOT
Subject: RE: 2310-13-70 RAB to the East
Date: Wednesday, April 13, 2022 2:07:10 PM

All - I checked in with central office on this and we should be good to proceed with this approach. It's a bit abnormal but we should be okay. The 100% locally funded roundabout being included with a State LET is the "state action" that is triggering the need for environmental documentation. I've mentioned this to Art but if the roundabout gets constructed using a work in right of way permit not part of a State LET, we would not need to do environmental documentation for that scenario.

I can prepare a brief memo for the 60 project indicating that the project termini is going to be cut short a little bit and I can outline independent utility and logical termini with that memo. Vida can you just show me where the 60 mainline project is now going to "stop" on our plans and where the roundabout design will tie in? simple exhibit would work.

Ros – would the roundabout project make it in the SEWRPC TIP at all? If not, could it?

Regarding the CEC/Agency Coordination for the roundabout project:

- It's my understanding that the village will be retaining a qualified consultant to conduct the agency coordination for that project and develop a CEC for our review.
- I would also have the municipality get a wetland delineation done by a qualified consultant (maybe SEWRPC) for the disturbance area. Wetland impacts could be banked using our banking system because the work is potentially going with a state LET.
- Tribal emails should come from a WisDOT staff member. Have the eventual design consultant get a hold of me regarding this.
- Project will have to get run through the 106 process. Have the consultants identify if it meets ground disturbance and real estate thresholds for the screening list, if not, arch and history surveys would be needed.
- Roundabout project should hold a PIM or send out a mailing outlining the purpose and need of the project, alternatives considered, why the preferred alternative was selected, PM contact information for comments and a proposed schedule.
- If it goes with the State LET it can be under the DNR cooperative agreement umbrella so the team will need to coordinate the roundabout project with DNR through our typical process. Make sure to outline the impacts to the stream on the north end of the roadway here. Keep in mind that in stream work restrictions may be applied to that disturbance work (typically March 1 – June 15 no in-stream work, but could be additional dates).
- USFWS species list and appropriate species keys should be conducted for the roundabout project.
- Check in with Andy Malsom on Haz mat needs
- CEC would need to be signed by the PSE date

Let me know. Thank you.

Tim McElmeel

From: Burns, Roslin - DOT <Roslin.Burns@dot.wi.gov>
Sent: Wednesday, April 13, 2022 12:54 PM
To: Flower, Cynthia R - DOT <Cynthia.Flower@dot.wi.gov>; Baumann, Art - DOT <Art.Baumann@dot.wi.gov>
Cc: Shaffer, Vida - DOT <Vida.Shaffer@dot.wi.gov>; McElmeel, Timothy J - DOT <Timothy.McElmeel@dot.wi.gov>; Wierzchowski, Casey W - DOT <Casey.Wierzchowski@dot.wi.gov>; Shahin, Reem - DOT <Reem.Shahin@dot.wi.gov>; Higdon, Hans - DOT <Hans.Higdon@dot.wi.gov>
Subject: RE: 2310-13-70 RAB to the East

If we are going to do any design review, we would need a separate design ID and then an SMFA would be used instead of the non-participating letter.
I think the language laid out in the SMFA is appropriate for the situation.

From: Flower, Cynthia R - DOT <Cynthia.Flower@dot.wi.gov>
Sent: April 13, 2022 12:27 PM
To: Baumann, Art - DOT <Art.Baumann@dot.wi.gov>; Burns, Roslin - DOT <Roslin.Burns@dot.wi.gov>
Cc: Shaffer, Vida - DOT <Vida.Shaffer@dot.wi.gov>; McElmeel, Timothy J - DOT <Timothy.McElmeel@dot.wi.gov>; Wierzchowski, Casey W - DOT <Casey.Wierzchowski@dot.wi.gov>; Shahin, Reem - DOT <Reem.Shahin@dot.wi.gov>; Higdon, Hans - DOT <Hans.Higdon@dot.wi.gov>
Subject: 2310-13-70 RAB to the East

Art – Sounds like if the Community of Jackson wants to pay for the design and construction 100% for the RAB on the east end of the project limits.
We could Let it with our project, however they would need to follow the environmental process in order to be tied. It would need a separate ID and we would need a Non-Participating Letter (NPL) from the community. If they do not get there documents completed in time to tie to Vida's project with a PSE of 5/1/2023, they would need to let this on their own. We are thinking we should wait a bit to see how far they get before we create the ID. With this being 100% local funding we would not need to get in the TIP or STIP, but would need that NPL.

Roz – please feel free to add or correct anything I may have missed.

Added Tim McElmeel and Casey to this discussion as well for input.

Cindy Flower, PE
SE Region Program Manager
WisDOT SE Region Office – Planning Section
NW 141 Barstow Street

Project and Analyst Information:

Project ID:	N/A
Project Type:	Other
Location:	WIS 60 and Eagle Drive Village of Jackson, Washington County Washington County SE Region
Analyst:	Jeff Knudson, PE, PTOE and Matt Flanagan
Agency:	SRF Consulting
Date:	2/10/2022

Background Information:

Project Need:	There is anticipated need for capacity and safety improvements at the intersection.
Project Objective(s):	In reviewing operations analysis at WIS 60 and Eagle Drive, it was determined that the minor approaches currently experience failing LOS under existing two-way stop control conditions. This ICE analysis is being conducted to determine the best intersection control to potentially improve operations and safety.
Additional Information:	A Traffic Impact Analysis (TIA) was conducted for the Village of Jackson on June 9, 2020. This TIA projected significant development growth which will impact operations at the intersection of WIS 60 and Eagle Drive. The results of the recently completed TIA prompted this Phase II ICE Analysis. WisDOT has an ongoing design project (WIS 60 (Main Street) Resurfacing Project - County P to Eagle Drive). This project is scheduled for 2024 resurfacing. On this 1.85-mile segment of WIS 60, the current AADT ranges from 8,700 to 15,700 and is forecasted to grow to 9,900 to 17,800 by 2044. WIS 60 is a commercial and residential corridor with 17.3% trucks. Recent construction in summer of 2021 added new sidewalk and path on the southside of WIS 60. This includes new curb ramps at Eagle Drive.

Existing Crash Information:

Observed Crash History:

Years: 2016-2020

Crash Type	Fatal	Injury A	Injury B	Injury C	KABC	PDO	Total
Angle	0	0	3	1	4	0	4
Rear-End	0	0	0	0	0	2	2
Sideswipe	0	0	0	0	0	1	1
Total	0	0	3	1	4	3	7

Fatal: Injury from crash which results in death
Injury A: Suspected Serious Injury
Injury B: Suspected Minor Injury
Injury C: Possible Injury
KABC: Fatal + Injury A + Injury B + Injury C
PDO: Property Damage Only/No apparent Injury
Total: Fatal + Injury A + Injury B + Injury C + PDO

Crash Trends:

Three of the four KABC crashes involved right angle crashes between motorists traveling through on Eagle Drive and through on WIS 60. The fourth KABC crash includes a motorist making a left turn from Eagle Drive with a through motorist on WIS 60.

Contributing Factors:

Two-Way Stop Controlled Intersections with delay may encourage motorists to lower their gap acceptance, which increases the probability of collisions.

Near the intersection of WIS 60 and Eagle Drive, WIS 60 has a change in posted speed limit. This intersection is near the location of the speed transition location, and this may contribute to crashes at this intersection by motorists unable to judge this transitional speed.

Additional Modes of Transportation:

Mode	Need? Yes/No	Nearby Generators and Existing Facilities	Volume	
			#	Unit
PED/BIKE	Yes	In summer of 2021, Village of Jackson added new sidewalk and path on the south side of WIS 60. This includes new curb ramps at Eagle Drive.	There is no significant volume of bikes or pedestrians at this intersection in the existing conditions. With the addition of bike and pedestrian facilities as part of this project, it is anticipated bike and pedestrian volumes will increase.	
OSOW	No	WIS 60 is also not listed as an OSOW Truck Route, a High Clearance Route, or a Wind Tower Corridor. WIS 60 is however listed as a Designated Long Truck Route. Per TRANS 276.07, it is not a 65' Restricted Truck Route.	N/A	N/A

Summary Tables:

Descriptions:

Alt.	Traffic Control	Description of Alternative
1	Traffic Signal	Install Traffic Signal at the intersection of WIS 60 and Eagle Drive. Each approach on WIS 60 will have left turn storage lanes for turning vehicles and medians prior to entering the signalized intersection. Pedestrian and bicyclist facilities will be present.
2	Roundabout	Single-lane roundabout at the intersection of WIS 60 and Eagle Drive. Pedestrian and bicyclist facilities will be present.

*** Construction of the Roundabout alternative is 55K less expensive than the Traffic Signal alternative.**

Costs and Impacts:

Alt.	Traffic Control	Construction Cost	Real Estate Impacts			Environmental Impacts	
			# Build	# Acres	Cost	Impact Type	# Acres
1	Traffic Signal	$1,240,000	0	0.041 Acre	$7,700	N/A	N/A
2	Roundabout	$1,350,000	0	0.067 Acre	$12,200	N/A	N/A

Safety Performance:

Alt.	Traffic Control	Analysis Period	KABC	PDO	Total
-	Existing Conditions	2016-2020	4	3	7
-	Future No-Build	2025-2034	2.59	5.61	8.20
1	Traffic Signal	2025-2034	4.37	24.56	28.93
2	Roundabout	2025-2034	4.96	11.64	16.60

Note: This table does not include qualitative safety indicators such as the safety benefits due to reductions in stops and reduced queues under each alternative or the relatively unimpeded flow that is offered by each alternative.

- The No-Build conditions show the lowest number of total crashes and the lowest number of fatal and injury crashes as compared to Alternative 1 (Signal) and Alternative 2 (RAB). However, due to the need for operational improvements, the No-Build conditions may not meet the needs of motorists.

- The predicted decrease in fatal crashes between Alternative 1 (Signal) and Alternative 2 (RAB) may be attributed to lower travel speeds, reduction in need for vehicles to stop and geometric nature of roundabouts which have shown the ability to reduce angle and head-on collisions.

Additional Information:

The following trends are not captured in the Safety Performance table (above) but are relevant in the overall discussion of safety performance of all analyzed conditions.

- Alternative 2 (RAB) shows a predicted 32% reduction in fatal crashes as compared to the No-Build conditions.
- Alternative 2 (RAB) shows a 57% reduction in predicted fatal crashes as compared to Alternative 1 (Signal).
- Alternative 2 (RAB) shows a 12% reduction in fatal and injury crashes as compared to Alternative 1 (Signal).
- Alternative 1 (Signal) is predicted to result in an additional total associated crash cost of more than $200,000 as compared to Alternative 2 (RAB) over the 10-year analysis period.

Recommendation:

Alternative: The **Roundabout** is recommended for this intersection. This recommendation is based on the analysis and comparison metrics outlined in this Phase II ICE report

Influencing Factors: Nine primary factors were used to compare alternatives: Cost, Operational Factors, Off-Peak Operations, Right-of-Way (ROW), Predicted Motorist Safety Performance, Pedestrians, Bikes, Local Opinion, and Access.

Metric	Selection Notes	Preference
Cost	The construction costs of the two alternatives are similar. The projected construction cost of the signalized alternative is approximately $1,240,000 and the cost of the roundabout alternative is approximately $1,350,000. Additional operational and maintenance costs associated with the traffic signal alternative are anticipated to be greater than that of the roundabout alternative. The predicted crash costs associated with the roundabout alternative are approximately $200,000 less than that of the traffic signal alternative over the 10-year analysis period (2025-2034).	
Operational Factors	Both alternatives have excess capacity to accommodate fluctuations in future traffic volumes. The traffic signal alternative has 45% excess capacity and the RAB alternative has 75% excess capacity. Queues will not impact access points adjacent to the intersection.	
Off Peak Operations	Off peak operations would generally be more desirable with the Roundabout alternative because a roundabout would offer very little delay when faced with minimal other traffic. Unlike a signal, which needs to cycle to waiting motorists, a roundabout would operate in a nearly free-flow manner outside of the main commuting peaks. The roundabout alternative has additional benefits of traffic calming which may improve safety performance along WIS 60 as traffic enters the municipality from the east.	

ROW	The Roundabout alternative requires 0.067 acres of ROW. The Traffic Signal alternative requires .041 acres of ROW acquisition.	
Predicted Motorist Safety Performance	The roundabout is anticipated to have less severe crashes but more frequent crashes. Roundabouts reduce the frequency of angle and head-on crashes, the two most severe crash types. They also slow traffic within the intersection and that reduces severity when crashes occur. These benefits of a roundabout are tempered by the fact that they are anticipated to produce more frequent crashes than a Traffic Signal Alternative.	
Pedestrian	There is widespread debate when comparing pedestrian safety and operations between a roundabout and signal alternative. Both will provide facilities for pedestrians to cross the approaches and final design would strive to provide the safest and most efficient facilities with either alternative. The benefits of the Traffic Signal alternative include positive control of the traffic flow, allowing pedestrians the confidence they can cross the road with forced-stopped traffic rather than relying on yielding motorists. Only one pedestrian was observed at this intersection during both the AM and PM peak hours. With the high volume of traffic on the approaches to this intersection, and the relative infrequency of pedestrians (meaning the traveling public will not readily anticipate pedestrian conflicts as they might in an urban setting), including forced stops with a traffic signal is desirable. This could also be accommodated with a pedestrian hybrid beacon signal with the roundabout alternative. This positive control ability gives the traffic signal alternative a slight benefit over the roundabout.	
Bicyclists	There is widespread debate when comparing bike safety and operations between a roundabout and signal alternative. Both will provide facilities for pedestrians to cross the approaches and final design would strive to provide the safest and most efficient facilities with either alternative. Only one bicyclist was observed at this intersection during both the AM and PM peak hours. Bike facilities would be accommodated for both alternatives and there is no widespread uniform opinion on which is “better” for bikers. See previous note about traffic signal ability to provide positive control over pedestrian movements. If bikers choose to use side-paths to traverse “through” the roundabout, the traffic signal may provide additional confidence in these movements.	
Local Opinion	Village input needed.	Not Available
Access	Alternatives have no access impacts	

Existing & Future No-Build Conditions:

Practical Feasibility:

Public Opinion:	No formal public input has been received.
Business Impacts:	No physical or access-related business impacts are anticipated.
ROW Impacts:	No ROW impacts are anticipated.
Utility Impacts:	Utility impacts are not anticipated.
Cost Estimate:	N/A
Additional Info:	There is anticipated need for capacity and safety improvements at the intersection.

Safety Analysis:

Crash Trend(s) and Contributing Factors:	Three of the four KABC crashes involved right angle crashes between motorists traveling through on Eagle Drive and through on WIS 60. The fourth KABC crash includes a motorist making a left turn from Eagle Drive with a through motorist on WIS 60.
Conflict Points:	There are 32 conflict points at the existing intersection.
Vulnerable Users:	This intersection currently has pedestrian curb ramps on the Northwest, Northeast and Southwest quadrants. A sidewalk is present on the north side of the west leg and on the west side of the north leg. There are no marked crosswalks at this intersection. A paved multi-use path is present on the south side of the west leg.
Additional Info:	This intersection does not currently have advanced pedestrian warnings or signage. Refer to Attachment 3, Collision Diagram and Attachment 5, Predictive Safety Analysis.

Safety Performance Measures:

	Analysis Period	KABC	PDO	Total
Existing Conditions	2016-2020	4	3	7
Future No-Build	2025-2034	2.59	5.61	8.20

*The total number of observed crashes for the Existing Conditions (2016-2020) is similar to the total number of predicted crashes for the No-Build Conditions (2025-2034). This suggests that the Empirical Bayes weighting method could be used at this intersection to get a more accurate understanding of future conditions. The Empirical Bayes weighting method is not used in this ICE analysis because it is not applicable to other control types that are analyzed in this report.

Operational Analysis:

Warrant Analysis:	Under existing conditions, a four-hour warrant is met. Four-hour and peak hour warrants are met by year 2035.
Queue Impacts:	The Piggly Wiggly access drive on Eagle Drive is anticipated to be impacted by queuing on the northbound approach (95 percentile queues would reach the access driveway). The Piggly Wiggly grocery store is in the Southeast quadrant of WIS 60 and Eagle Drive. The access drive on Eagle Drive for the BP Gas station will also be impacted by queuing on the southbound approach.
Additional Capacity:	No excess capacity exists at this intersection during peak hours.
Railroad Impacts:	No - This intersection is not near a railroad.
Additional Info:	Refer to Attachment 4 for Existing Volumes and Traffic Forecasts, Attachment 6 for Traffic Operations Analysis Outputs and Attachment 7 for Signal Warrant Analysis Worksheets.

Operational Performance Measures:

Year: 2020	Existing Conditions											
AM Peak	EB (WIS 60)			WB (WIS 60)			NB (Eagle Drive)			SB (Eagle Drive)		
	L	T/R	-	L	T	R	-	All	-	L	T/R	-
# Lanes	1	1>	-	1	1	1	-	<1>	-	1	1>	-
Volume	70	345	35	15	235	85	25	20	25	80	15	65
Delay (s)	8.4	*	*	8.3	*	*	*	27.0	*	40.2	13.2	*
LOS	A	*	*	A	*	*	*	D	*	E	B	*
V/C Ratio	0.07	*	*	0.02	*	*	*	0.34	*	0.49	0.18	*
Queue (ft)	5	*	*	5	*	*	*	35	*	60	15	*
Storage (ft.)	175	-	-	150	-	125	-	-	-	100	-	-
PM Peak	EB (WIS 60)			WB (WIS 60)			NB (Eagle Drive)			SB (Eagle Drive)		
	L	T/R	-	L	T	R	-	All	-	L	T/R	-
# Lanes	1	1>	-	1	1	1	-	<1>	-	1	1>	-
Volume	55	275	100	35	310	80	50	40	20	55	35	55
Delay (s)	8.5	*	*	8.4	*	*	*	67.6	*	45.7	19.6	*
LOS	A	*	*	A	*	*	*	F	*	E	C	*
V/C Ratio	0.06	*	*	0.04	*	*	*	0.75	*	0.44	0.31	*
Queue (ft)	5	*	*	5	*	*	*	120	*	50	35	*
Storage (ft.)	175	-	-	150	-	125	-	-	-	100	-	-

Additional Information

<1 = Indicates shared left through lane present
1> = Indicates shared right through lane present
<1> = Indicates shared left through right lane present
- = Indicates zero
* = Indicates HCM6th edition methodology does not calculate measures of effectiveness for this movement.

Year: 2035	Future No-Build Conditions (2035)											
AM Peak	EB (WIS 60)			WB (WIS 60)			NB (Eagle Drive)			SB (Eagle Drive)		
	L	T/R	-	L	T	R	-	All	-	L	T/R	-
# Lanes	1	1>	-	1	1	1	-	<1>	-	1	1>	-
Volume	75	350	35	15	235	90	25	20	25	85	15	70
Delay (s)	8.4	*	*	8.4	*	*	*	28.4	*	44.5	13.3	*
LOS	A	*	*	A	*	*	*	D	*	E	B	*
V/C Ratio	0.08	*	*	0.02	*	*	*	0.35	*	0.54	0.19	*
Queue (ft)	10	*	*	5	*	*	*	40	*	70	20	*
Storage (ft.)	175	-	-	150	-	125	-	-	-	100	-	-
PM Peak	EB (WIS 60)			WB (WIS 60)			NB (Eagle Drive)			SB (Eagle Drive)		
	L	T/R	-	L	T	R	-	All	-	L	T/R	-
# Lanes	1	1>	-	1	1	1	-	<1>	-	1	1>	-
Volume	55	280	105	35	315	85	50	45	20	60	35	55
Delay (s)	8.6	*	*	8.4	*	*	*	77.9	*	54.6	20	*
LOS	A	*	*	A	*	*	*	F	*	F	C	*
V/C Ratio	0.06	*	*	0.04	*	*	*	.80	*	0.52	0.32	*
Queue (ft)	5	*	*	5	*	*	*	135	*	55	20	*
Storage (ft.)	175	-	-	150	-	125	-	-	-	100	-	-

Additional Information

<1 = Indicates shared left through lane present
1> = Indicates shared right through lane present
<1> = Indicates shared left through right lane present
- = Indicates zero
* = Indicates HCM6th edition methodology does not calculate measures of effectiveness for this movement.

This analysis does not consider the way some motorists may alter their route or travel time to avoid extreme congested conditions.

Alt. 1: Traffic Signal:

Practical Feasibility:

Public Opinion:	No formal public input has been received.
Business Impacts:	No physical or access-related business impacts are anticipated.
ROW Impacts:	This alternative will likely require approximately 0.041 acres of ROW.
Utility Impacts:	Utility impacts are not known at this time, but they are not anticipated to be useful as a comparison metric because all alternatives will have similar impacts.
Cost Estimate:	$1,240,000
Additional Info:	Refer to Attachment 2 for Concept Alternatives and Cost Estimates.

Safety Analysis:

Crash Trend(s) being Improved with Alt.:	Installation of a traffic signal will minimize angle crashes by allocating green time to the side-street and requiring mainline (WIS 60) motorists to stop for the permissive side-street movements. It should be noted that mainline (WIS 60) rear-end crashes may increase as a result of the need to stop for the traffic signal.
Geometric Concerns:	There are 32 conflict points at the proposed signalized intersection.
Additional Info:	Refer to Attachment 3, Collision Diagram and Attachment 5, Predictive Safety Analysis.

Safety Performance Measures:

	Analysis Period	KABC	PDO	Total
Existing Conditions	2016-2020	4	3	7
Future No-Build	2025-2034	2.59	5.61	8.20
Alt. 1: Traffic Signal:	2025-2034	4.96	11.64	16.60

Operational Analysis:

Warrant Analysis:	Four-hour and Peak hour warrants are met by year 2035.
Queue Impacts:	No immediately adjacent access points impacted by potential queues.
Additional Capacity:	This signalized intersection is anticipated to operate with excess capacity in year 2035. In year 2035, this alternative is projected to have 45% excess capacity.
Railroad Impacts:	No - This intersection is not near a railroad.
Additional Info:	Refer to Attachment 4 for Existing Volumes and Traffic Forecasts, Attachment 6 for Traffic Operations Analysis Outputs and Attachment 7 for Signal Warrant Analysis Worksheets.

Operational Performance Measures:

Year: 2035	Alt. 1: Traffic Signal											
AM Peak	EB (WIS 60)			WB (WIS 60)			NB (Eagle Drive)			SB (Eagle Drive)		
	L	T/R	-	L	T	R	L	T/R	-	L	T/R	-
# Lanes	1	1>	-	1	1	1	1	1>	-	1	1>	-
Volume	75	390	40	30	280	90	30	25	40	85	15	75
Delay (s)	9.0	0	9.0	11.5	6.9	5.6	12.3	0	11.2	12.5	0	11.8
LOS	A	A	A	B	A	A	B	A	B	B	A	B
V/C Ratio	0.18	0.00	0.72	0.10	0.45	0.10	0.09	0.00	0.27	0.24	0.00	0.38
Queue (ft)	15	0	80	10	40	10	10	0	20	25	0	25
Storage (ft.)	200	-	-	200	-	200	125	-	-	125	-	-
PM Peak	EB (WIS 60)			WB (WIS 60)			NB (Eagle Drive)			SB (Eagle Drive)		
	L	T/R	-	L	T	R	L	T/R	-	L	T/R	-
# Lanes	1	1>	-	1	1	1	1	1>	-	1	1>	-
Volume	60	335	130	65	355	85	75	45	40	60	40	55
Delay (s)	10.6	0	10.2	14.3	7.8	5.8	15.8	0	13.8	15.2	0	14.1
LOS	B	A	B	B	A	A	B	A	B	B	A	B
V/C Ratio	0.16	0.00	0.73	0.23	0.52	0.09	0.25	0.00	0.33	0.20	0.00	0.37
Queue (ft)	20	0	120	25	75	10	30	0	35	25	0	35
Storage (ft.)	200	-	-	200	-	200	125	-	-	125	-	-

Additional Information

<1 = Indicates shared left through lane present
1> = Indicates shared right through lane present
<1> = Indicates shared left through right lane present
- = Indicates zero
* = Indicates HCM6th edition methodology does not calculate measures of effectiveness for this movement.

Storage/deceleration lengths were determined using guidelines found in the Facilities Development Manual (FDM).

Alt. 2: Roundabout:

Practical Feasibility:

Public Opinion:	No formal public input has been received.
Business Impacts:	ROW acquisition for areas in the Southwest and Southeast quadrants of WIS 60 and Eagle Drive is required. The total ROW required if approximately .0.058 acres. In addition, access impacts are expected on the north and south legs of the intersection due to the presence of splitter islands.
ROW Impacts:	This alternative will likely require approximately 0.067 acres of ROW.
Utility Impacts:	Utility impacts are not known at this time, but they are not anticipated to be useful as a comparison metric because all alternatives will have similar impacts.
Cost Estimate:	$1,350,000
Additional Info:	Refer to Attachment 3, Collision Diagram and Attachment 5, Predictive Safety Analysis.

Safety Analysis:

Crash Trend(s) being Improved with Alt.:	Alternative 2 shows a predicted 32% reduction in fatal crashes as compared to the No-Build conditions.
Geometric Concerns:	There are 8 conflict points at the proposed 4-leg roundabout.
Additional Info:	Refer to Attachment 3, Collision Diagram and Attachment 5, Predictive Safety Analysis.

Safety Performance Measures:

	Analysis Period	KABC	PDO	Total
Existing Conditions	2016-2020	4	3	7
Future No-Build	2025-2034	2.59	5.61	8.20
Alt. 2: Roundabout:	2025-2034	4.96	11.64	16.60

Operational Analysis:

Warrant Analysis:	N/A
Queue Impacts:	No adjacent access points impacted by potential queues.
Additional Capacity:	This roundabout controlled intersection is anticipated to operate with excess capacity in year 2035. In year 2035, this alternative is projected to have 75% excess capacity.
Railroad Impacts:	No - This intersection is not near a railroad.
Additional Info:	Refer to Attachment 4 for Existing Volumes and Traffic Forecasts and Attachment 6 for Traffic Operations Outputs.

Operational Performance Measures:

Year: 2035	Alt. 2: Roundabout											
AM Peak	EB (WIS 60)			WB (WIS 60)			NB (Eagle Drive)			SB (Eagle Drive)		
	-	All	-	-	All	-	-	All	-	-	All	-
# Lanes	-	<1>	-	-	<1>	-	-	<1>	-	-	<1>	-
Volume	75	390	40	30	280	90	30	25	40	85	15	75
Delay (s)	*	9.6	*	*	7.5	*	*	7.3	*	*	6.6	*
LOS	*	A	*	*	A	*	*	A	*	*	A	*
V/C Ratio	*	0.54	*	*	0.42	*	*	0.17	*	*	0.23	*
Queue (ft)	*	85	*	*	55	*	*	15	*	*	25	*
Storage (ft.)	-	-	-	-	-	-	-	-	-	-	-	-
PM Peak	EB (WIS 60)			WB (WIS 60)			NB (Eagle Drive)			SB (Eagle Drive)		
	-	All	-	-	All	-	-	All	-	-	All	-
# Lanes	-	<1>	-	-	<1>	-	-	<1>	-	-	<1>	-
Volume	60	335	130	65	355	85	75	45	40	60	40	55
Delay (s)	*	10.3	*	*	10.2	*	*	7.1	*	*	7.5	*
LOS	*	B	*	*	B	*	*	A	*	*	A	*
V/C Ratio	*	0.57	*	*	0.56	*	*	0.24	*	*	0.25	*
Queue (ft)	*	95	*	*	90	*	*	25	*	*	25	*
Storage (ft.)	-	-	-	-	-	-	-	-	-	-	-	-

Additional Information

<1 = Indicates shared left through lane present
1> = Indicates shared right through lane present
<1> = Indicates shared left through right lane present
- = Indicates zero
* = Indicates HCM6th edition methodology does not calculate measures of effectiveness for this movement.

Attachments:

The following attachments are provided for documentation:

1. Project Location Map
2. Concept Alternatives and Cost Estimates
3. Collision Diagram
4. Existing Volumes and Traffic Forecasts
5. Predictive Safety Analysis
6. Traffic Operations Outputs
7. Traffic Signal Warrant Analysis Worksheets

Attachment 1 – Project Location Map

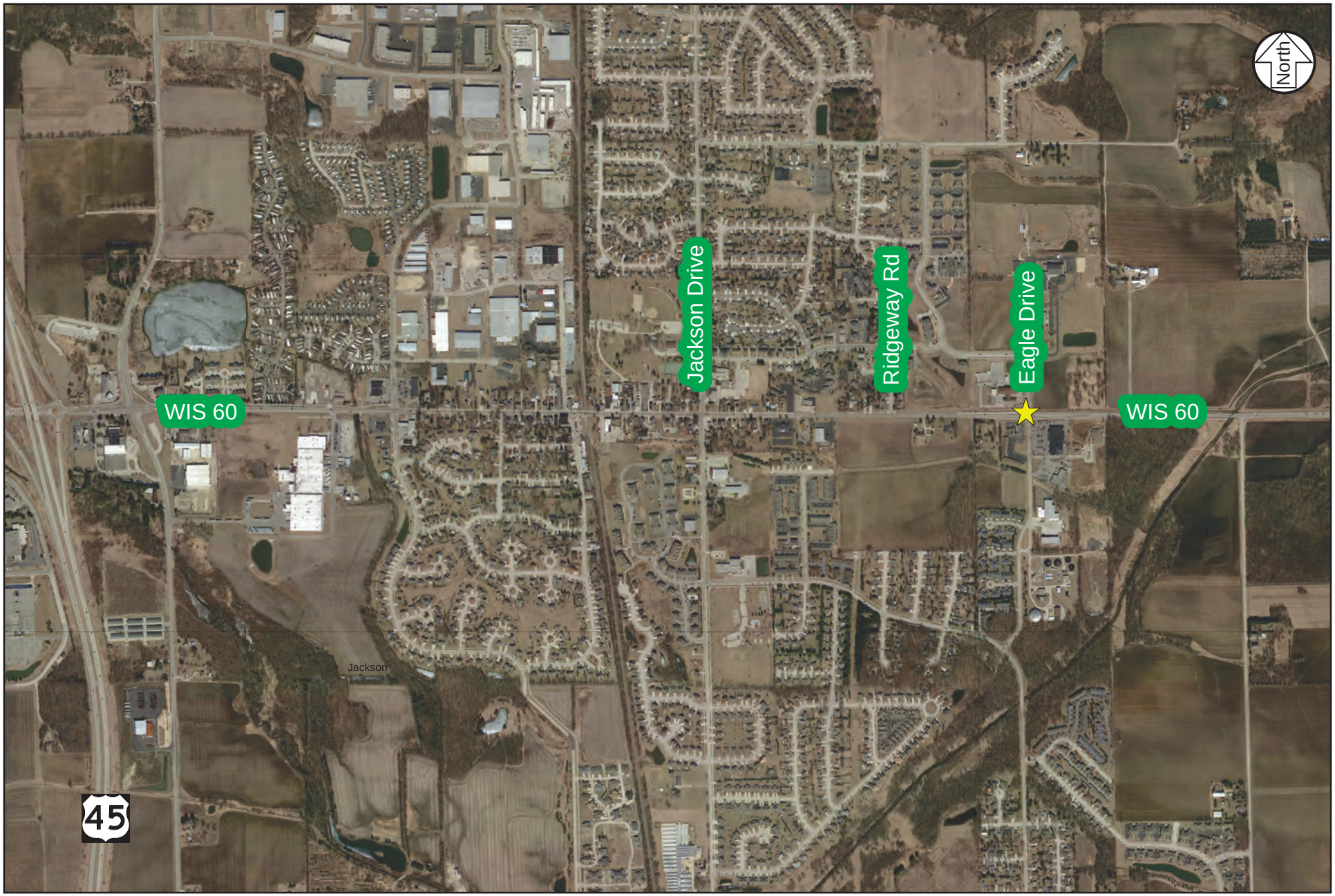

SRF

Project Location Map

WIS 60 & Eagle Drive - Phase II ICE

Village of Jackson, WI

Figure 1

Attachment 2 – Concept Alternatives and Cost Estimates

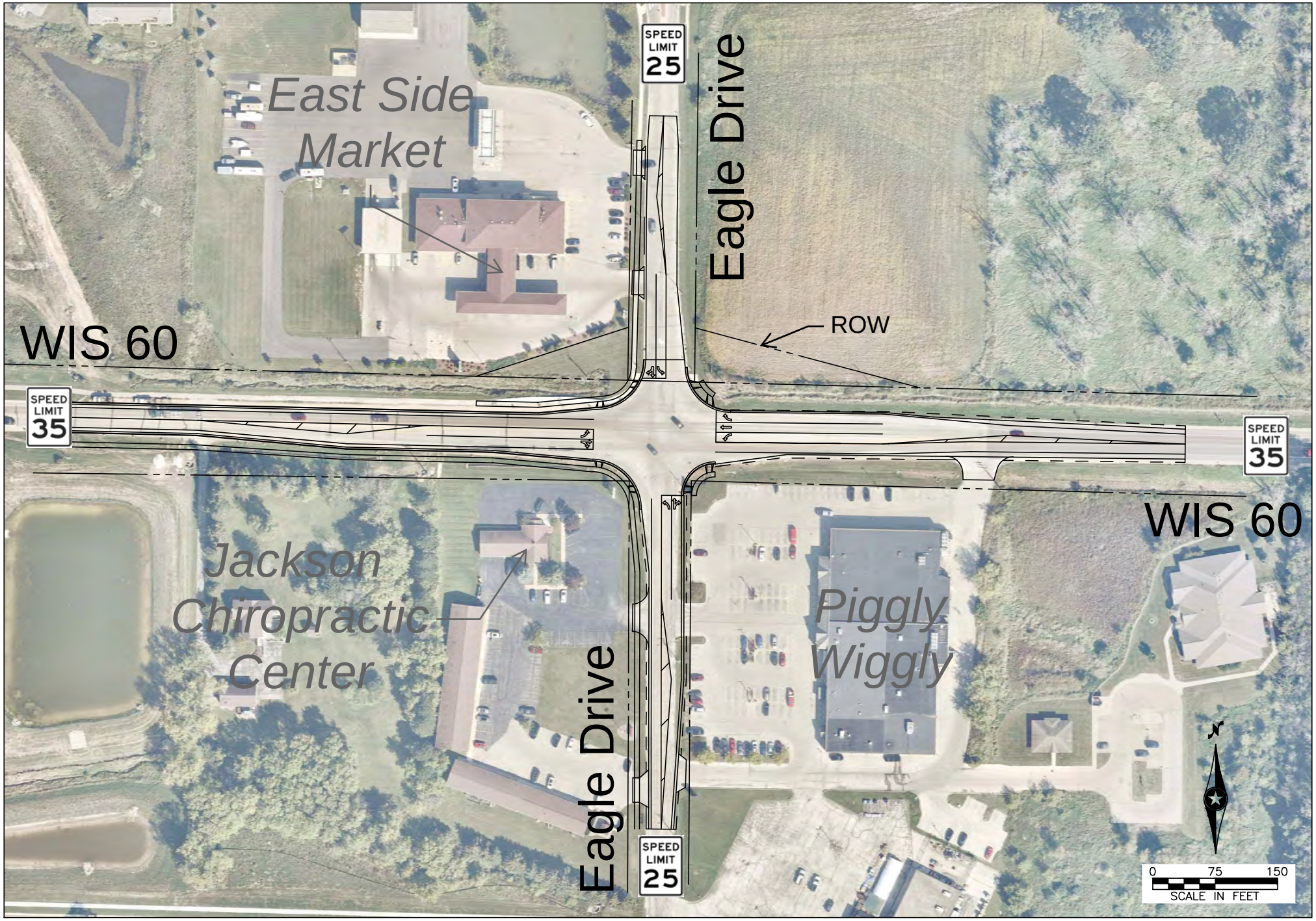

SRF

WIS 60 & Eagle Drive Traffic Signal Design

Eagle Drive ICE Analysis

Village of Jackson, WI

FIGURE 2

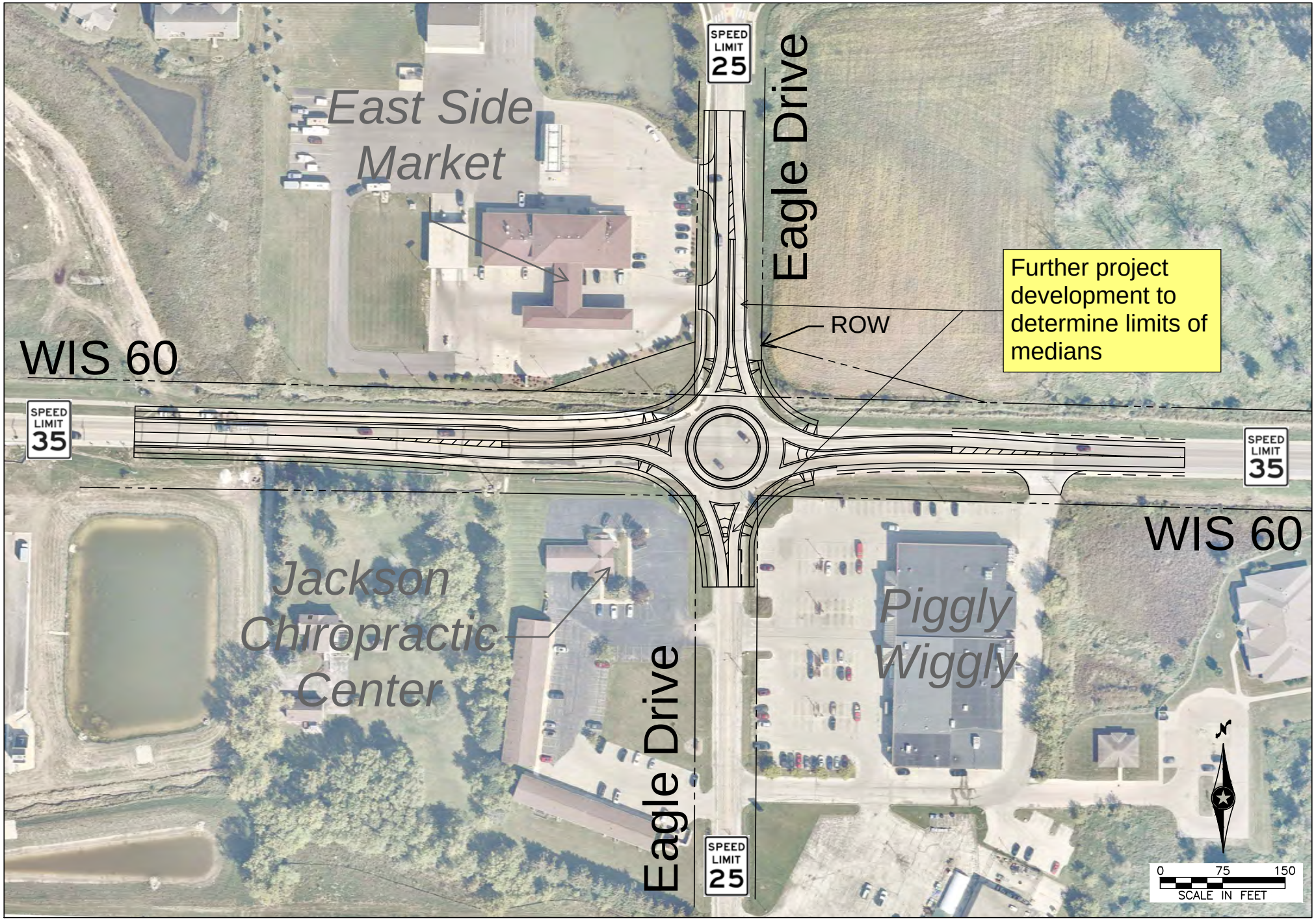

SRF

WIS 60 & Eagle Drive Roundabout Design

Eagle Drive ICE Analysis

Village of Jackson, WI

FIGURE 1

Concept Cost Estimate Summary - Alternative 1: Traffic Signal
WIS 60 & Eagle Drive
Village of Jackson, Wisconsin
Washington County
February 2022

Project Segment Type: U (R=Rural, S=Suburban, U=Urban)

Summary Item	ITEM DESCRIPTION	UNIT	QUANTITY	UNIT COST	TOTAL
1	EXCAVATION COMMON	CY	Included in Incidentals		
2	MILLING	SY	10240	$5.00	$51,200
3	BASE AGGGREGATE DENSE 1 1/4-INCH	TON	1560	$20.00	$31,200
4	SIDEWALK	SF	10364	$7.00	$72,500
5	HMA PAVEMENT	TON	3700	$80.00	$296,000
6	CONCRETE CURB AND GUTTER 30-INCH	LF	1590	$18.00	$28,600
7	**Major Roadway Items Detailed Subtotaled (Items 1 to 6)**				$479,500
8	SIGNALIZE INTERSECTION	LS	1	$180,000.00	$180,000
9	DRAINAGE	LS	% of Item 6	15%	$71,900
10	EROSION CONTROL AND RESTORATION	LS	% of Item 6	7%	$33,600
11	TRAFFIC CONTROL AND STAGING	LS	% of Item 6	8%	$38,400
12	SIGNING/MARKING	LS	% of Item 6	6%	$28,800
13	ROADWAY INCIDENTALS	LS	% of Item 6	20%	$95,900
14	**Construction Costs Subtotal (Items 7 to 13)**				$928,100
15	MOBILIZATION	LS	% of Item 13	7%	$60,000
16	PRELIMINARY ENGINEERING	LS	% of Item 13+14	10%	$98,800
17	FINAL ENGINEERING				
18	CONSTRUCTION ENGINEERING	LS	% of Item 13+14	15%	$148,200
19	REAL ESTATE - SOUTHWEST QUADRANT	AC	0.023	$141,500.00	$3,300
20	REAL ESTATE - SOUTHEAST QUADRANT	AC	0.018	$250,000.00	$4,400
TOTAL PROJECT COST (2022 DOLLARS)					**$1,242,800**

SRF

Concept Cost Estimate Summary - Alternative 2: Roundabout
WIS 60 & Eagle Drive
Village of Jackson, Wisconsin
Washington County
February 2022

Project Segment Type: U (R=Rural, S=Suburban, U=Urban)

Summary Item	ITEM DESCRIPTION	UNIT	QUANTITY	UNIT COST	TOTAL
1	EXCAVATION COMMON	CY	Included in Incidentals		
2	BASE AGGGREGATE DENSE 1 1/4-INCH	TON	6580	$20.00	$131,600
3	SIDEWALK	SF	19920	$7.00	$139,440
4	HMA PAVEMENT	TON	2230	$80.00	$178,400
5	CONCRETE CURB AND GUTTER 30-INCH	LF	4510	$18.00	$81,200
6	**Major Roadway Items Detailed Subtotaled (Items 1 to 5)**				$530,600
7	DRAINAGE	LS	% of Item 6	25%	$132,700
8	EROSION CONTROL AND RESTORATION	LS	% of Item 6	7%	$37,100
9	TRAFFIC CONTROL AND STAGING	LS	% of Item 6	12%	$63,700
10	LIGHTING	LS	1	$32,000.00	$32,000
11	SIGNING/MARKING	LS	% of Item 6	8%	$42,400
12	ROADWAY INCIDENTALS	LS	% of Item 6	30%	$159,200
13	**Construction Costs Subtotal (Items 6 to 12)**				$997,700
14	MOBILIZATION	LS	% of Item 14	7%	$70,000
15	PRELIMINARY ENGINEERING	LS	% of Item 14+15	10%	$106,800
16	FINAL ENGINEERING				
17	CONSTRUCTION ENGINEERING	LS	% of Item 14+15	15%	$160,200
18	REAL ESTATE - SOUTHWEST QUADRANT	AC	0.042	$141,500.00	$5,900
19	REAL ESTATE - SOUTHEAST QUADRANT	AC	0.025	$250,000.00	$6,300
TOTAL PROJECT COST (2022 DOLLARS)					**$1,346,900**

SRF

Attachment 3 – Collision Diagram

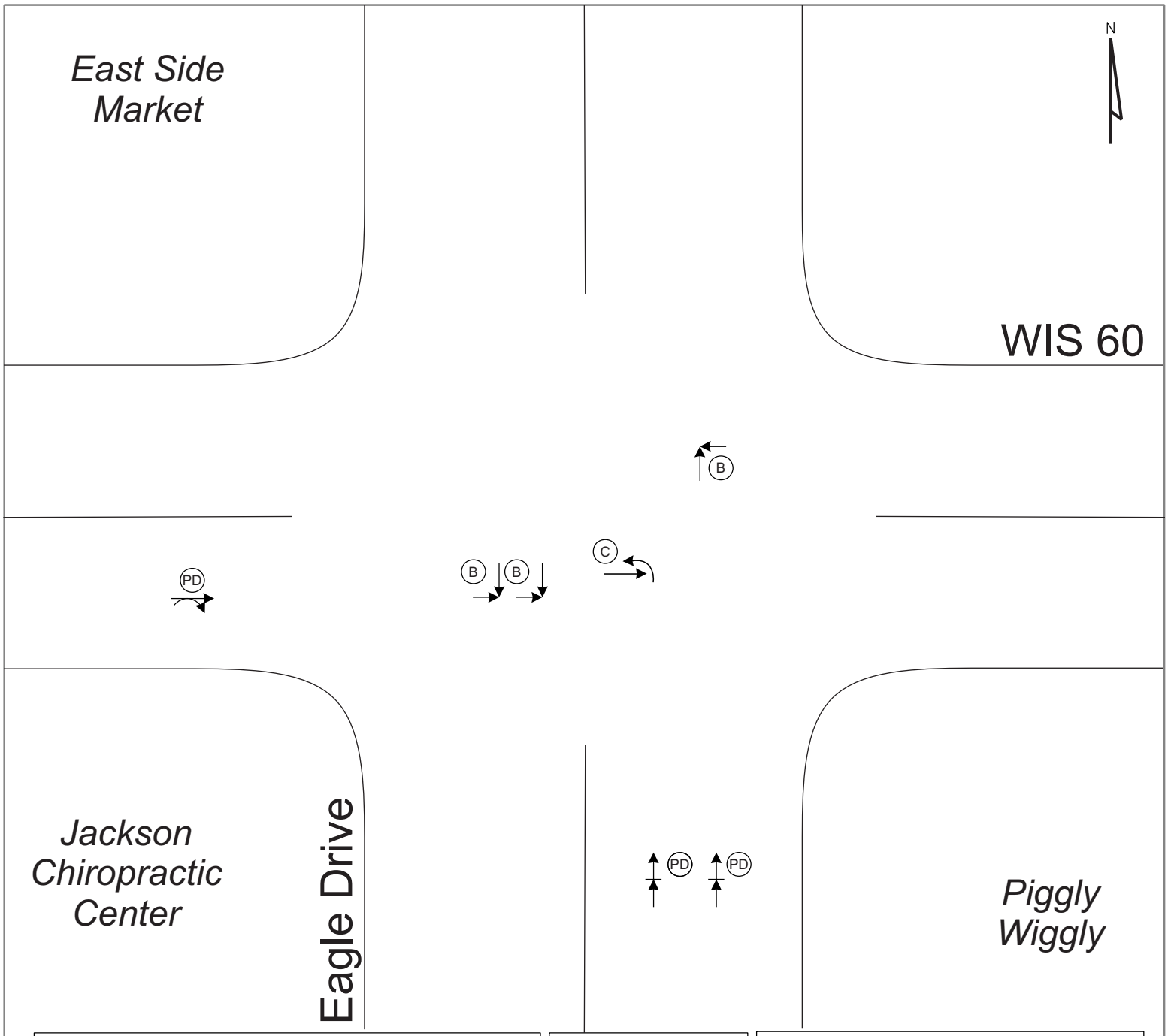

DOCUMENTATION CONVENTION

(XX) CRASH FREQUENCY (2016 - 2020)

CRASH RATE

.43 Crashes
Per One Million Entering Vehicles

Entering Vehicles: 8,950/day

CRASH FREQUENCY/SEVERITY

7 Crashes

- 0 Fatal Crash (K)
- 0 Incapacitating (A-level)
- 3 Non-Incapacitating (B-level)
- 1 Possible Injury (C-level)
- 3 Property Damage Only

LEGEND

Moving Vehicle	Stop/Yield Sign	Angle (Right Angle)	Head-On
Backing Vehicle	Tree	Angle (Left Turn)	Rear-End
Pedestrian	Utility Pole	Angle (Right Turn)	Out of Control
Bicyclist	Fixed Object	Sideswipe-Same	Overtake
Parked Vehicle	Non-Fixed Object	Sideswipe-Opposite	Overturn

FIGURE 4
COLLISION DIAGRAM
WIS 60 & EAGLE DRIVE
VILLAGE OF JACKSON, WISCONSIN

Years: 2016 - 2020

Attachment 4 – Existing Volumes and Traffic Forecasts

Intersection Traffic Volume Report

Count Basics	Version 2013.J4.1		Page 1 of 11
Start Date:	Wednesday, February 12, 2020	Weekday/Weekend	Schools Not in Session
Total Number of Hours Counted: 9		Non-Holiday	No Special Events

Base Information, Observed (9) Hour and Estimated (24) Hour Volume Summaries

Intersection of: Eagle Dr and STH 60

Site Information

Municipality	Village of Jackson		
County	Washington	WisDOT Region	SE
Traffic Control	Partial Stop Control		
Roadway Names		North Direction	↑
North Leg	Eagle Dr		
East Leg	STH 60		
South Leg	Eagle Dr		
West Leg	STH 60		
Special Considerations			
Schools	Not in Session		
Holidays	None		
Special Events	None		
Special Pedestrians Observed			
Pre-school children	None		
Elementry school age children	None		
Visually impaired (white cane/helper dog)	None		
Elderly/disabled (except wheelchairs)	None		
Wheelchairs/electric scooters	None		
Other (describe)	None	None	

Count Information

Hrs Counted:	6:00 AM-9:00 AM, 11:00 AM-2:00 PM, and 3:00 PM-6:00 PM				
1st Day of Count	Wednesday, February 12, 2020			Weather	
AM Peak Period	Wednesday, February 12, 2020			Cloudy & Dry	
Midday Peak Period	Saturday, February 22, 2020			Cloudy & Dry	
PM Peak Period	Wednesday, February 12, 2020			Cloudy & Dry	
Calculated Peak Hours					
AM	6:45-7:45am	MD	11:00-12:00am	PM	4:15-5:15pm
Peak Hours Selected for Analysis					
AM	7:00-8:00am	MD	11:00-12:00am	PM	4:45-5:45pm
Daily/Seasonal Adjustment Group					
Count Expansion Group					
Daily/Seasonal Adjustment Factor	1		Count Expansion Factor	#N/A	
Company Name	SRF Consulting, Inc.			Manual Adj.	1.000
Observers	AM Peak Period	Matt Flanagan/Gabby Hellman			
	Midday Peak Period	Matt Flanagan/Gabby Hellman			
	PM Peak Period	Matt Flanagan/Gabby Hellman			
Comments					

Observed 9 Hour Volume Summary

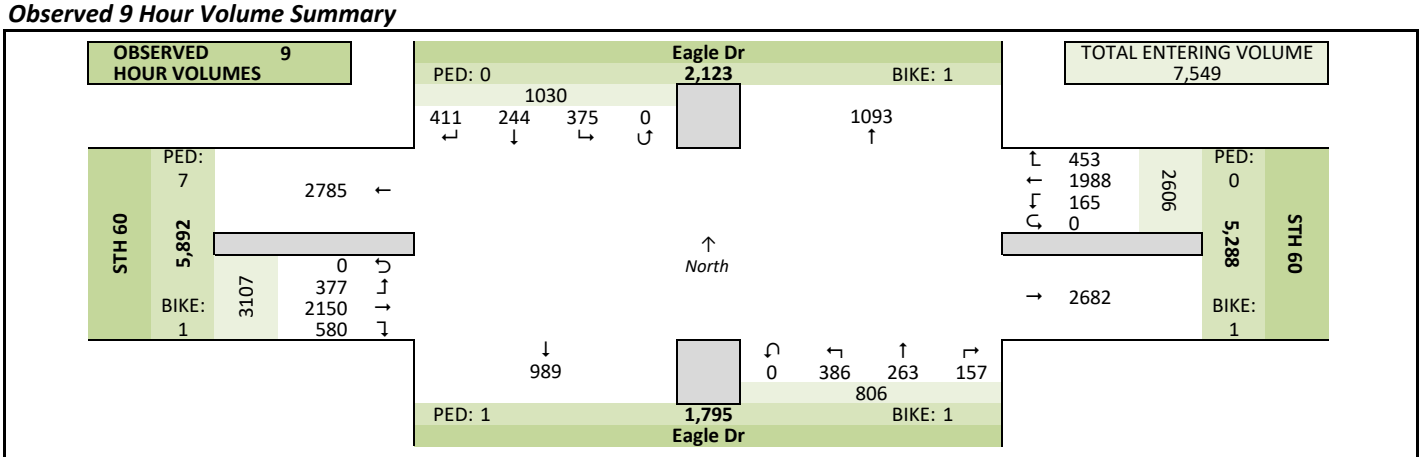

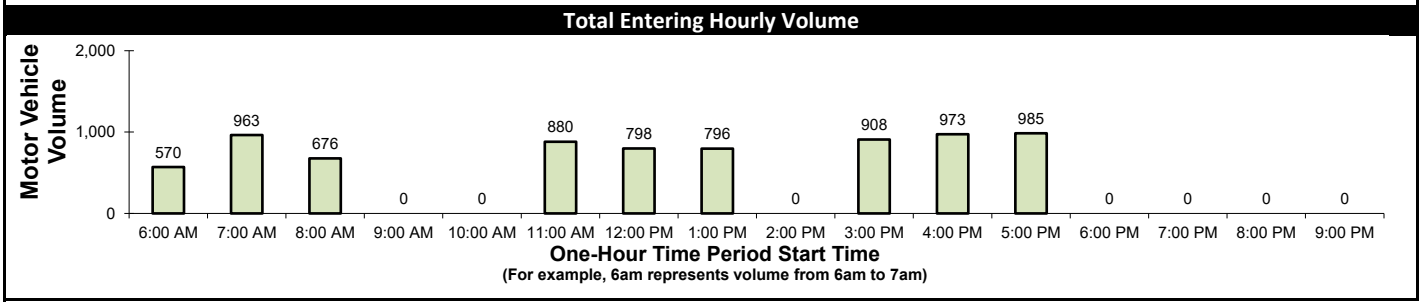

Estimated 24 Hour AADT

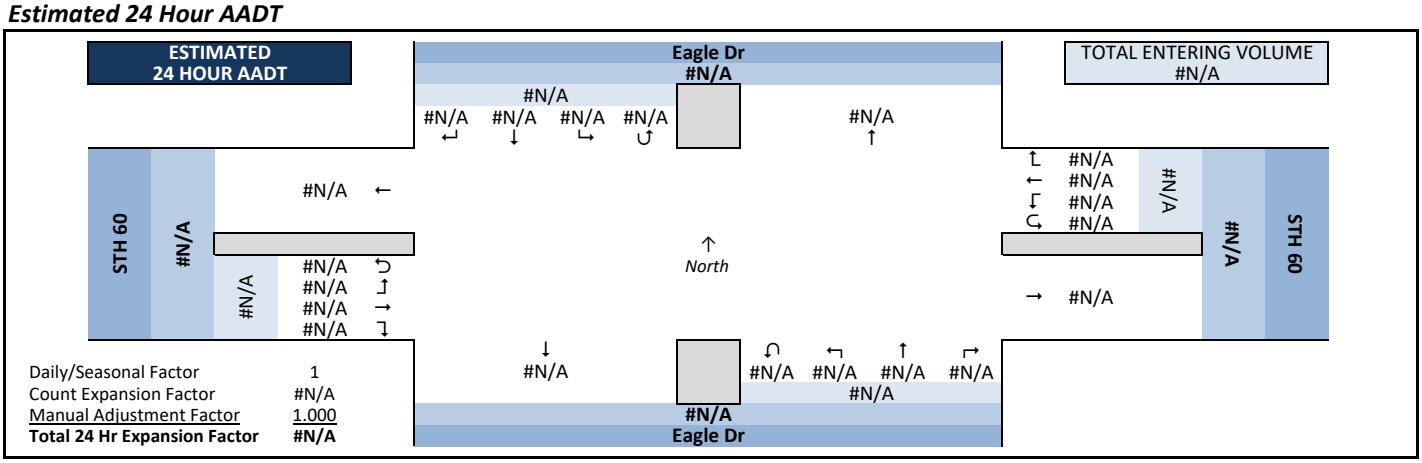

Intersection Traffic Volume Report

Count Basics			Page 2 of 11
Start Date:	Wednesday, February 12, 2020	Weekday/Weekend	Schools Not in Session
Total Number of Hours Counted: 9		Non-Holiday	No Special Events

Peak Hour Volume Graphical Summary

All Motor Vehicles

Eagle Dr and STH 60

AM Peak Hour Summary

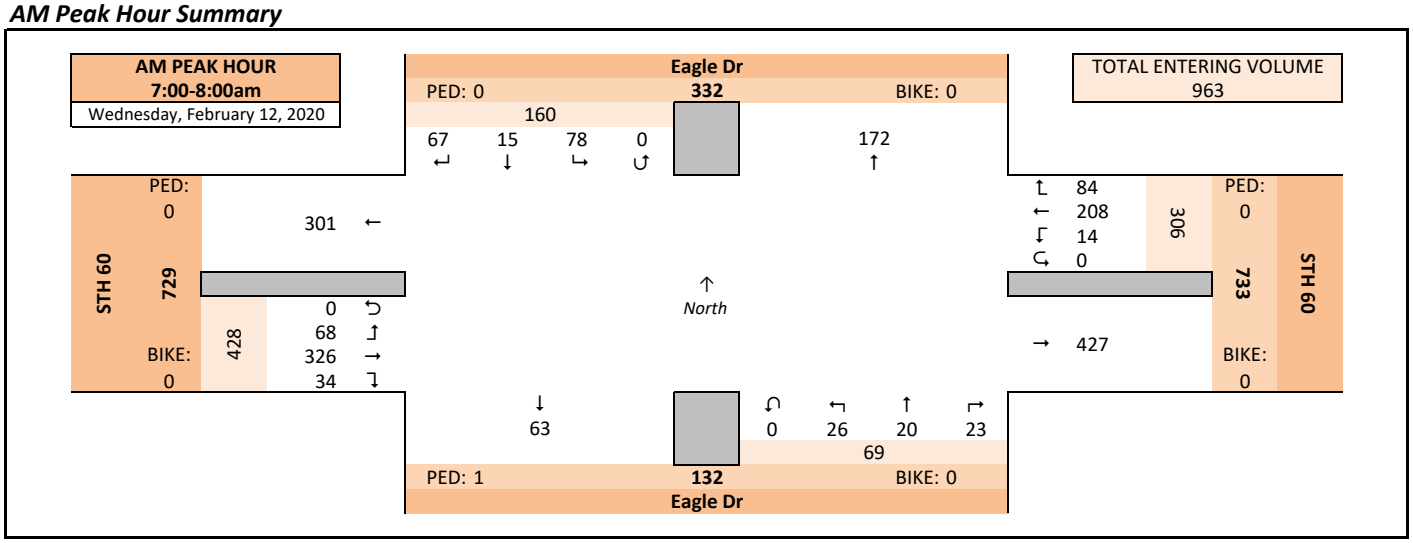

Midday (MD) Peak Hour Summary

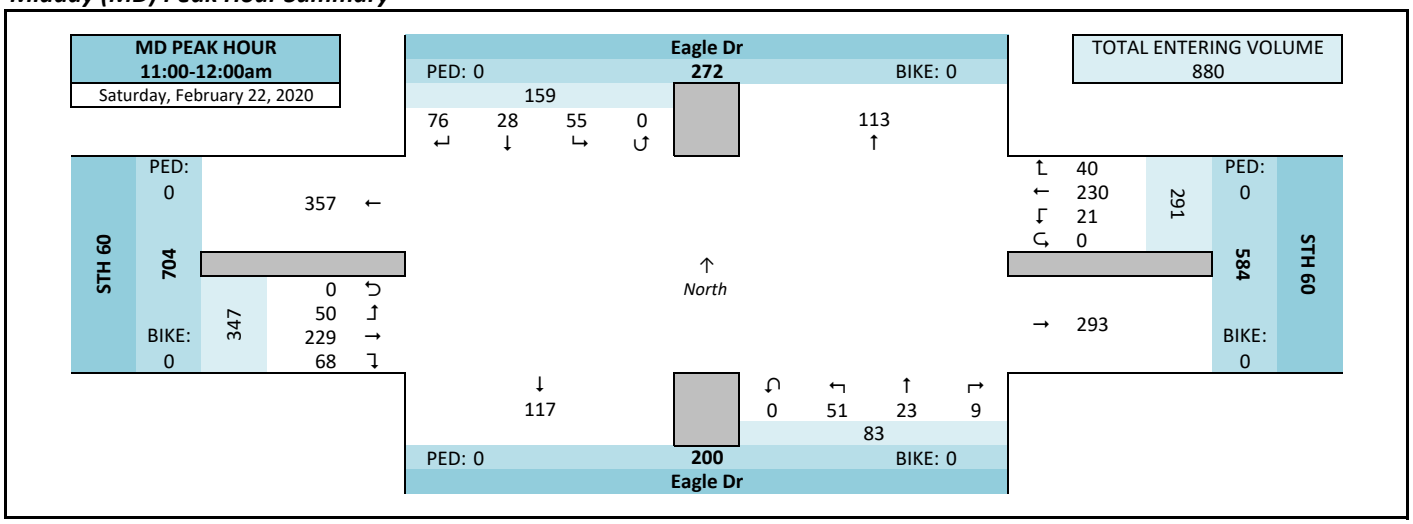

PM Peak Hour Summary

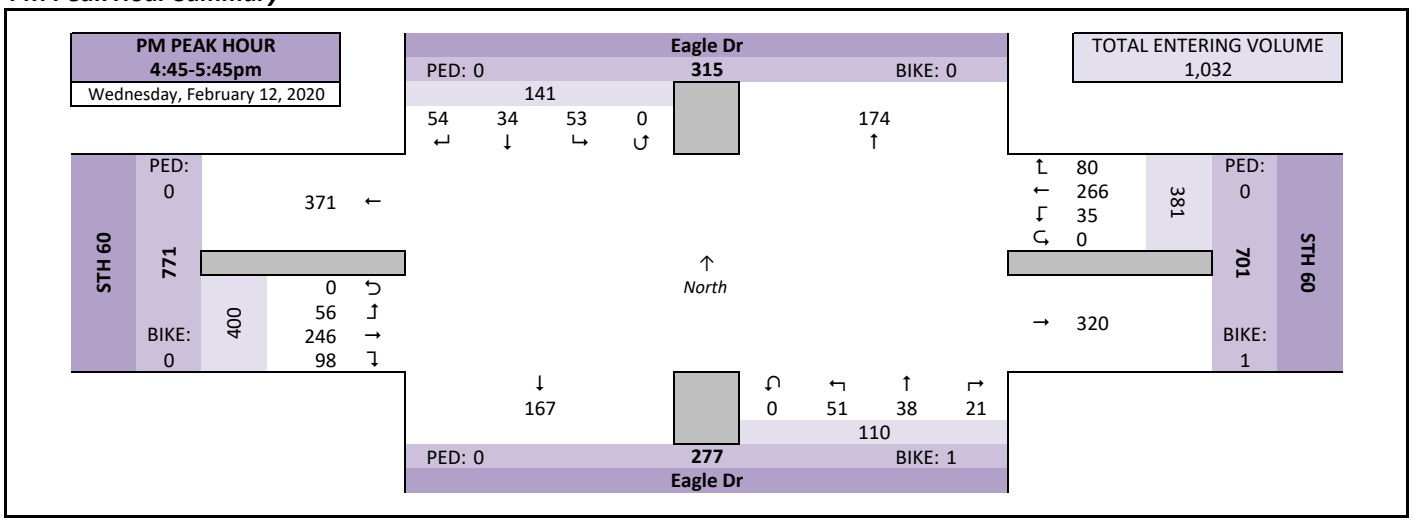

Intersection Traffic Volume Report

Count Basics			*Page 3 of 11*
Start Date:	Wednesday, February 12, 2020	Weekday/Weekend	Schools Not in Session
Total Number of Hours Counted: 9		Non-Holiday	No Special Events

Peak Hour Volume Summary

All Motor Vehicles

Eagle Dr and STH 60

Peak Hour Volumes, Truck Percentages, and PHFs

Wednesday, February 12, 2020		↓ From North					← From East					↑ From South					→ From West					
	AM Peak Hour	Eagle Dr					STH 60					Eagle Dr					STH 60					
	Start Time	Right	Thru	Left	U-Tn	Total	Right	Thru	Left	U-Tn	Total	Right	Thru	Left	U-Tn	Total	Right	Thru	Left	U-Tn	Total	Totals
AM Peak Hour	7:00 AM	9	4	11	0	24	17	46	3	0	66	4	6	6	0	16	6	95	17	0	118	224
	7:15 AM	19	2	25	0	46	39	48	4	0	91	6	4	6	0	16	9	95	29	0	133	286
	7:30 AM	29	5	22	0	56	20	70	3	0	93	11	5	7	0	23	12	81	18	0	111	283
	7:45 AM	10	4	20	0	34	8	44	4	0	56	2	5	7	0	14	7	55	4	0	66	170
	Peak Hour Volume	67	15	78	0	160	84	208	14	0	306	23	20	26	0	69	34	326	68	0	428	963
	Rounded Hourly Volume	65	15	80	0	160	85	210	15	0	310	25	20	25	0	70	35	325	70	0	430	970
	% Single Unit Trucks	3.0	0.0	6.4	0.0	4.4	1.2	3.4	0.0	0.0	2.6	4.3	5.0	7.7	0.0	5.8	5.9	3.1	4.4	0.0	3.5	3.5
	% Heavy Trucks	3.0	0.0	1.3	0.0	1.9	0.0	1.9	7.1	0.0	1.6	0.0	0.0	3.8	0.0	1.4	2.9	2.8	0.0	0.0	2.3	2.0
	% Trucks (Total)	6.0	0.0	7.7	0.0	6.2	1.2	5.3	7.1	0.0	4.2	4.3	5.0	11.5	0.0	7.2	8.8	5.8	4.4	0.0	5.8	5.5
	Peak Hour Factor (PHF)	0.58	0.75	0.78	0.00	0.71	0.54	0.74	0.87	0.00	0.82	0.52	0.83	0.93	0.00	0.75	0.71	0.86	0.59	0.00	0.80	0.84

Saturday, February 22, 2020		↓ From North					← From East					↑ From South					→ From West					
	MD Peak Hour	Eagle Dr					STH 60					Eagle Dr					STH 60					
	Start Time	Right	Thru	Left	U-Tn	Total	Right	Thru	Left	U-Tn	Total	Right	Thru	Left	U-Tn	Total	Right	Thru	Left	U-Tn	Total	Totals
Midday (MD) Peak Hour	11:00 AM	38	7	28	0	73	8	53	5	0	66	2	5	11	0	18	11	61	9	0	81	238
	11:15 AM	13	8	9	0	30	9	70	6	0	85	3	7	14	0	24	17	59	19	0	95	234
	11:30 AM	13	6	8	0	27	17	62	6	0	85	2	5	13	0	20	20	49	11	0	80	212
	11:45 AM	12	7	10	0	29	6	45	4	0	55	2	6	13	0	21	20	60	11	0	91	196
	Peak Hour Volume	76	28	55	0	159	40	230	21	0	291	9	23	51	0	83	68	229	50	0	347	880
	Rounded Hourly Volume	75	30	55	0	160	40	230	20	0	290	10	25	50	0	85	70	230	50	0	350	885
	% Single Unit Trucks	0.0	0.0	0.0	0.0	0.0	2.5	2.6	0.0	0.0	2.4	0.0	0.0	2.0	0.0	1.2	0.0	1.3	0.0	0.0	0.9	1.2
	% Heavy Trucks	0.0	0.0	0.0	0.0	0.0	0.0	0.4	0.0	0.0	0.3	0.0	0.0	2.0	0.0	1.2	0.0	1.7	2.0	0.0	1.4	0.8
	% Trucks (Total)	0.0	0.0	0.0	0.0	0.0	2.5	3.0	0.0	0.0	2.7	0.0	0.0	3.9	0.0	2.4	0.0	3.1	2.0	0.0	2.3	2.0
	Peak Hour Factor (PHF)	0.50	0.87	0.49	0.00	0.54	0.59	0.82	0.87	0.00	0.86	0.75	0.82	0.91	0.00	0.86	0.85	0.94	0.66	0.00	0.91	0.92

Wednesday, February 12, 2020		↓ From North					← From East					↑ From South					→ From West					
	PM Peak Hour	Eagle Dr					STH 60					Eagle Dr					STH 60					
	Start Time	Right	Thru	Left	U-Tn	Total	Right	Thru	Left	U-Tn	Total	Right	Thru	Left	U-Tn	Total	Right	Thru	Left	U-Tn	Total	Totals
PM Peak Hour	4:45 PM	12	8	14	0	34	21	63	5	0	89	4	10	8	0	22	25	59	12	0	96	241
	5:00 PM	22	8	23	0	53	26	80	7	0	113	4	10	16	0	30	27	71	20	0	118	314
	5:15 PM	11	10	7	0	28	14	58	11	0	83	5	9	19	0	33	24	54	14	0	92	236
	5:30 PM	9	8	9	0	26	19	65	12	0	96	8	9	8	0	25	22	62	10	0	94	241
	Peak Hour Volume	54	34	53	0	141	80	266	35	0	381	21	38	51	0	110	98	246	56	0	400	1032
	Rounded Hourly Volume	55	35	55	0	145	80	265	35	0	380	20	40	50	0	110	100	245	55	0	400	1035
	% Single Unit Trucks	0.0	0.0	0.0	0.0	0.0	1.2	1.5	0.0	0.0	1.3	0.0	0.0	0.0	0.0	0.0	0.0	0.4	0.0	0.0	0.2	0.6
	% Heavy Trucks	0.0	0.0	1.9	0.0	0.7	1.2	1.1	0.0	0.0	1.0	0.0	0.0	0.0	0.0	0.0	0.0	1.6	3.6	0.0	1.5	1.1
	% Trucks (Total)	0.0	0.0	1.9	0.0	0.7	2.5	2.6	0.0	0.0	2.4	0.0	0.0	0.0	0.0	0.0	0.0	2.0	3.6	0.0	1.7	1.6
	Peak Hour Factor (PHF)	0.61	0.85	0.58	0.00	0.67	0.77	0.83	0.73	0.00	0.84	0.66	0.95	0.67	0.00	0.83	0.91	0.87	0.70	0.00	0.85	0.82

Peak Hour Pedestrian and Bicyclist Volumes

Pedestrians and Bicyclists		Crossing North Approach			Crossing East Approach			Crossing South Approach			Crossing West Approach			Total Ped & Bike
		Eagle Dr			STH 60			Eagle Dr			STH 60			
	15-Minute Start Time	Pedestrian	Bicyclist	Total	Pedestrian	Bicyclist	Total	Pedestrian	Bicyclist	Total	Pedestrian	Bicyclist	Total	Volume
AM	7:00 AM	0	0	0	0	0	0	0	0	0	0	0	0	0
	7:15 AM	0	0	0	0	0	0	1	0	1	0	0	0	1
	7:30 AM	0	0	0	0	0	0	0	0	0	0	0	0	0
	7:45 AM	0	0	0	0	0	0	0	0	0	0	0	0	0
	Total	0	0	0	0	0	0	1	0	1	0	0	0	1
MD	11:00 AM	0	0	0	0	0	0	0	0	0	0	0	0	0
	11:15 AM	0	0	0	0	0	0	0	0	0	0	0	0	0
	11:30 AM	0	0	0	0	0	0	0	0	0	0	0	0	0
	11:45 AM	0	0	0	0	0	0	0	0	0	0	0	0	0
	Total	0	0	0	0	0	0	0	0	0	0	0	0	0
PM	4:45 PM	0	0	0	0	0	0	0	0	0	0	0	0	0
	5:00 PM	0	0	0	0	0	0	0	0	0	0	0	0	0
	5:15 PM	0	0	0	0	1	1	0	1	1	0	0	0	2
	5:30 PM	0	0	0	0	0	0	0	0	0	0	0	0	0
	Total	0	0	0	0	1	1	0	1	1	0	0	0	2

Intersection Traffic Volume Report

Count Basics			*Page 4 of 11*
Start Date:	Wednesday, February 12, 2020	Weekday/Weekend	Schools Not in Session
Total Number of Hours Counted: 9		Non-Holiday	No Special Events

Hourly Volume Summary - Motor Vehicle Data

All Motor Vehicles

Eagle Dr and STH 60

One-Hour Motor Vehicle Data

One-Hour Time Period Start Time		From North (Eagle Dr)					From East (STH 60)					From South (Eagle Dr)					From West (STH 60)					Total Vehicle Volume	Directional Volume Totals	
		Right	Thru	Left	U-Tn	Total	Right	Thru	Left	U-Tn	Total	Right	Thru	Left	U-Tn	Total	Right	Thru	Left	U-Tn	Total		E/W	N/S
AM	6:00 AM	24	13	35	0	72	23	138	7	0	168	9	16	17	0	42	27	230	31	0	288	570	456	114
	7:00 AM	67	15	78	0	160	84	208	14	0	306	23	20	26	0	69	34	326	68	0	428	963	734	229
	8:00 AM	32	15	27	0	74	35	204	7	0	246	16	21	27	0	64	46	222	24	0	292	676	538	138
	9:00 AM	0	0	0	0	0	0	0	0	0	0	0	0	0	0	0	0	0	0	0	0	0	0	0
MD	10:00 AM	0	0	0	0	0	0	0	0	0	0	0	0	0	0	0	0	0	0	0	0	0	0	0
	11:00 AM	76	28	55	0	159	40	230	21	0	291	9	23	51	0	83	68	229	50	0	347	880	638	242
	12:00 PM	37	30	27	0	94	31	231	16	0	278	18	38	54	0	110	68	215	33	0	316	798	594	204
	1:00 PM	32	38	31	0	101	39	228	18	0	285	18	30	55	0	103	66	204	37	0	307	796	592	204
PM	2:00 PM	0	0	0	0	0	0	0	0	0	0	0	0	0	0	0	0	0	0	0	0	0	0	0
	3:00 PM	49	32	39	0	120	60	226	26	0	312	28	38	51	0	117	100	225	34	0	359	908	671	237
	4:00 PM	42	39	42	0	123	70	267	23	0	360	14	41	52	0	107	76	257	50	0	383	973	743	230
	5:00 PM	52	34	41	0	127	71	256	33	0	360	22	36	53	0	111	95	242	50	0	387	985	747	238
	6:00 PM	0	0	0	0	0	0	0	0	0	0	0	0	0	0	0	0	0	0	0	0	0	0	0
	7:00 PM	0	0	0	0	0	0	0	0	0	0	0	0	0	0	0	0	0	0	0	0	0	0	0
	8:00 PM	0	0	0	0	0	0	0	0	0	0	0	0	0	0	0	0	0	0	0	0	0	0	0
	9:00 PM	0	0	0	0	0	0	0	0	0	0	0	0	0	0	0	0	0	0	0	0	0	0	0
Totals		411	244	375	0	1030	453	1988	165	0	2606	157	263	386	0	806	580	2150	377	0	3107	7549	5713	1836

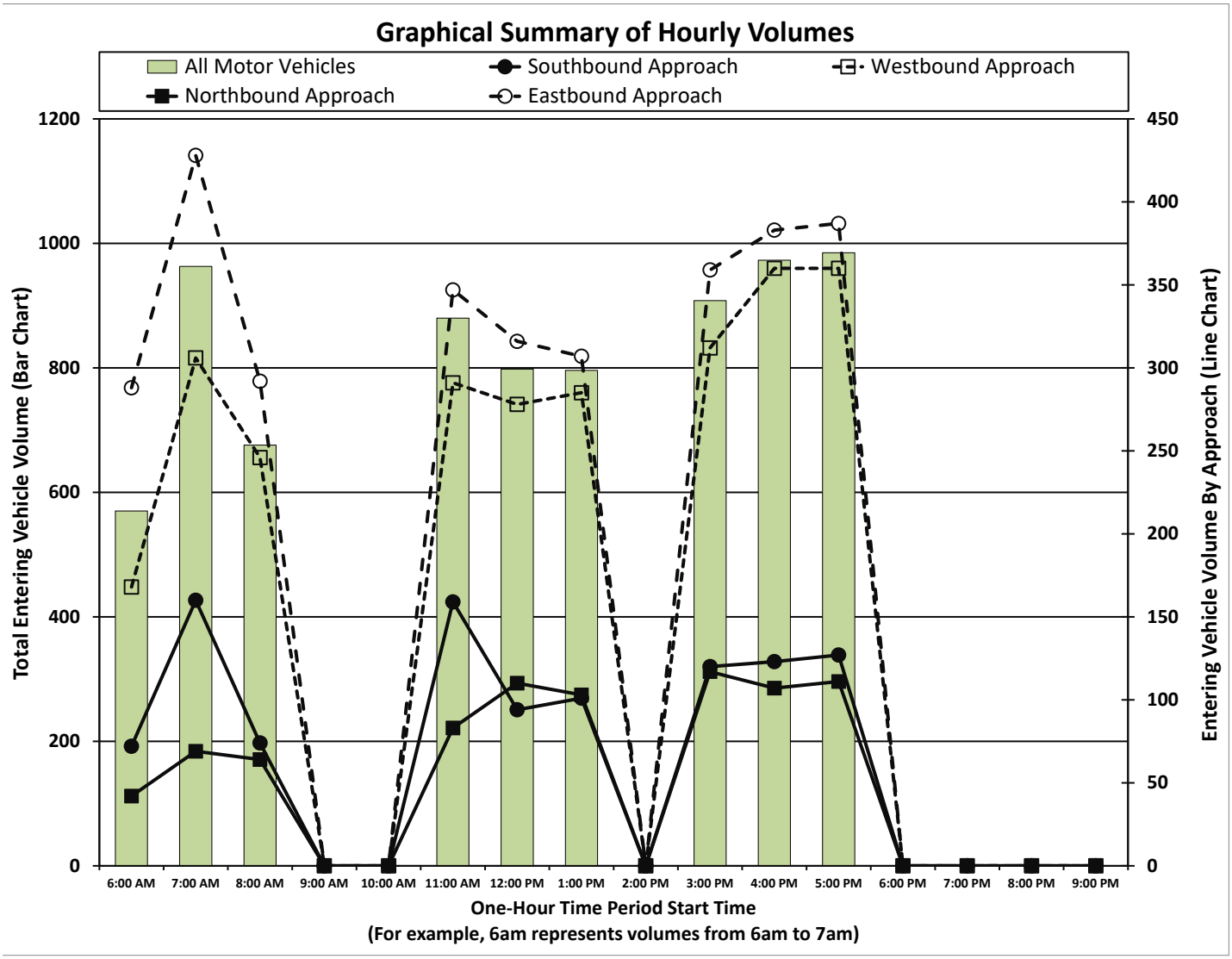

Intersection Traffic Volume Report

Count Basics			*Page 11 of 11*
Start Date:	Wednesday, February 12, 2020	Weekday/Weekend	Schools Not in Session
Total Number of Hours Counted: 9		Non-Holiday	No Special Events

15-Minute Pedestrian and Bicyclist Data

Pedestrians and Bicyclists

Eagle Dr and STH 60

15-Minute Pedestrian and Bicyclist Data

	15-Minute Time Period Start Time	Crossing North Approach Eagle Dr			Crossing East Approach STH 60			Crossing South Approach Eagle Dr			Crossing West Approach STH 60			15-Min Totals	Hourly Sum
		Pedestrian	Bicyclist	Total	Pedestrian	Bicyclist	Total	Pedestrian	Bicyclist	Total	Pedestrian	Bicyclist	Total		
AM Peak Period	6:00 AM	0	0	0	0	0	0	0	0	0	0	0	0	0	0
	6:15 AM	0	0	0	0	0	0	0	0	0	0	0	0	0	0
	6:30 AM	0	0	0	0	0	0	0	0	0	0	0	0	0	1
	6:45 AM	0	0	0	0	0	0	0	0	0	0	0	0	0	1
	7:00 AM	0	0	0	0	0	0	0	0	0	0	0	0	0	1
	7:15 AM	0	0	0	0	0	0	1	0	1	0	0	0	1	1
	7:30 AM	0	0	0	0	0	0	0	0	0	0	0	0	0	0
	7:45 AM	0	0	0	0	0	0	0	0	0	0	0	0	0	0
	8:00 AM	0	0	0	0	0	0	0	0	0	0	0	0	0	0
	8:15 AM	0	0	0	0	0	0	0	0	0	0	0	0	0	
	8:30 AM	0	0	0	0	0	0	0	0	0	0	0	0	0	
	8:45 AM	0	0	0	0	0	0	0	0	0	0	0	0	0	
	9:00 AM	0	0	0	0	0	0	0	0	0	0	0	0	0	
	9:15 AM	0	0	0	0	0	0	0	0	0	0	0	0	0	
	9:30 AM	0	0	0	0	0	0	0	0	0	0	0	0	0	
	9:45 AM	0	0	0	0	0	0	0	0	0	0	0	0	0	
Midday Peak Period	10:00 AM	0	0	0	0	0	0	0	0	0	0	0	0	0	
	10:15 AM	0	0	0	0	0	0	0	0	0	0	0	0	0	
	10:30 AM	0	0	0	0	0	0	0	0	0	0	0	0	0	
	10:45 AM	0	0	0	0	0	0	0	0	0	0	0	0	0	
	11:00 AM	0	0	0	0	0	0	0	0	0	0	0	0	0	0
	11:15 AM	0	0	0	0	0	0	0	0	0	0	0	0	0	3
	11:30 AM	0	0	0	0	0	0	0	0	0	0	0	0	0	3
	11:45 AM	0	0	0	0	0	0	0	0	0	0	0	0	0	3
	12:00 PM	0	0	0	0	0	0	0	0	0	3	0	3	3	3
	12:15 PM	0	0	0	0	0	0	0	0	0	0	0	0	0	0
	12:30 PM	0	0	0	0	0	0	0	0	0	0	0	0	0	0
	12:45 PM	0	0	0	0	0	0	0	0	0	0	0	0	0	2
	1:00 PM	0	0	0	0	0	0	0	0	0	0	0	0	0	4
	1:15 PM	0	0	0	0	0	0	0	0	0	0	0	0	0	
	1:30 PM	0	1	1	0	0	0	0	0	0	1	0	1	2	
	1:45 PM	0	0	0	0	0	0	0	0	0	2	0	2	2	
PM Peak Period	2:00 PM	0	0	0	0	0	0	0	0	0	0	0	0	0	
	2:15 PM	0	0	0	0	0	0	0	0	0	0	0	0	0	
	2:30 PM	0	0	0	0	0	0	0	0	0	0	0	0	0	
	2:45 PM	0	0	0	0	0	0	0	0	0	0	0	0	0	
	3:00 PM	0	0	0	0	0	0	0	0	0	0	0	0	0	0
	3:15 PM	0	0	0	0	0	0	0	0	0	0	0	0	0	1
	3:30 PM	0	0	0	0	0	0	0	0	0	0	0	0	0	1
	3:45 PM	0	0	0	0	0	0	0	0	0	0	0	0	0	2
	4:00 PM	0	0	0	0	0	0	0	0	0	1	0	1	1	2
	4:15 PM	0	0	0	0	0	0	0	0	0	0	0	0	0	1
	4:30 PM	0	0	0	0	0	0	0	0	0	0	1	1	1	3
	4:45 PM	0	0	0	0	0	0	0	0	0	0	0	0	0	2
	5:00 PM	0	0	0	0	0	0	0	0	0	0	0	0	0	2
	5:15 PM	0	0	0	0	1	1	0	1	1	0	0	0	2	
	5:30 PM	0	0	0	0	0	0	0	0	0	0	0	0	0	
	5:45 PM	0	0	0	0	0	0	0	0	0	0	0	0	0	
	6:00 PM	0	0	0	0	0	0	0	0	0	0	0	0	0	
	6:15 PM	0	0	0	0	0	0	0	0	0	0	0	0	0	
	6:30 PM	0	0	0	0	0	0	0	0	0	0	0	0	0	
	6:45 PM	0	0	0	0	0	0	0	0	0	0	0	0	0	
	7:00 PM	0	0	0	0	0	0	0	0	0	0	0	0	0	
	7:15 PM	0	0	0	0	0	0	0	0	0	0	0	0	0	
	7:30 PM	0	0	0	0	0	0	0	0	0	0	0	0	0	
	7:45 PM	0	0	0	0	0	0	0	0	0	0	0	0	0	
	8:00 PM	0	0	0	0	0	0	0	0	0	0	0	0	0	
	8:15 PM	0	0	0	0	0	0	0	0	0	0	0	0	0	
	8:30 PM	0	0	0	0	0	0	0	0	0	0	0	0	0	
	8:45 PM	0	0	0	0	0	0	0	0	0	0	0	0	0	
	9:00 PM	0	0	0	0	0	0	0	0	0	0	0	0	0	
	9:15 PM	0	0	0	0	0	0	0	0	0	0	0	0	0	
	9:30 PM	0	0	0	0	0	0	0	0	0	0	0	0	0	
	9:45 PM	0	0	0	0	0	0	0	0	0	0	0	0	0	
Totals		**0**	**1**	**1**	**0**	**1**	**1**	**1**	**1**	**2**	**7**	**1**	**8**	**12**	

Special Pedestrians

Pedestrian Type	None	1 or 2	A Few	Several	Many	Unknown
Pre-school Children	x					
Elementry School Age Children	x					
Visually Impaired (white cane/helper dog)	x					
Elderly/Disabled (except wheelchairs)	x					
Wheelchairs/Electric Scooters	x					
Other (None)	x					

WisDot Southeast Region
Planning Unit 1
Forecast by: Brent DesRoches
Phone: 262-548-5611
Email: brent.desroches@dot.wi.gov

Projected AM Design Hour Traffic Volumes

Indicates roundabout

Design Hour: 7:00-8:00am

Forecast Completed: 4/16/2020

Design Hour Turning Movement Data

Project Description

Project ID(s): Jackson TIA
Route(s): STH 60
Region/COUNTY(IES): SE / Washington
Location: Jackson Dr to Eagle Dr

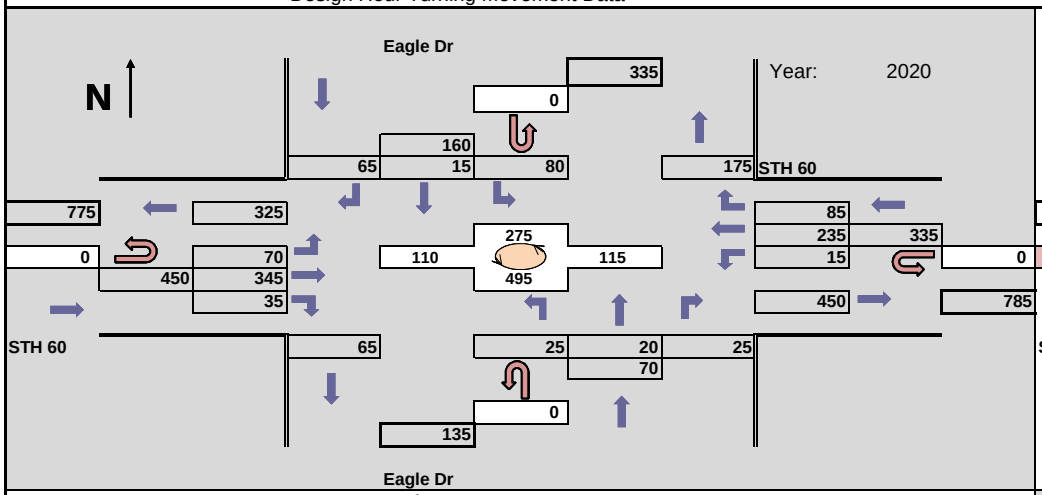

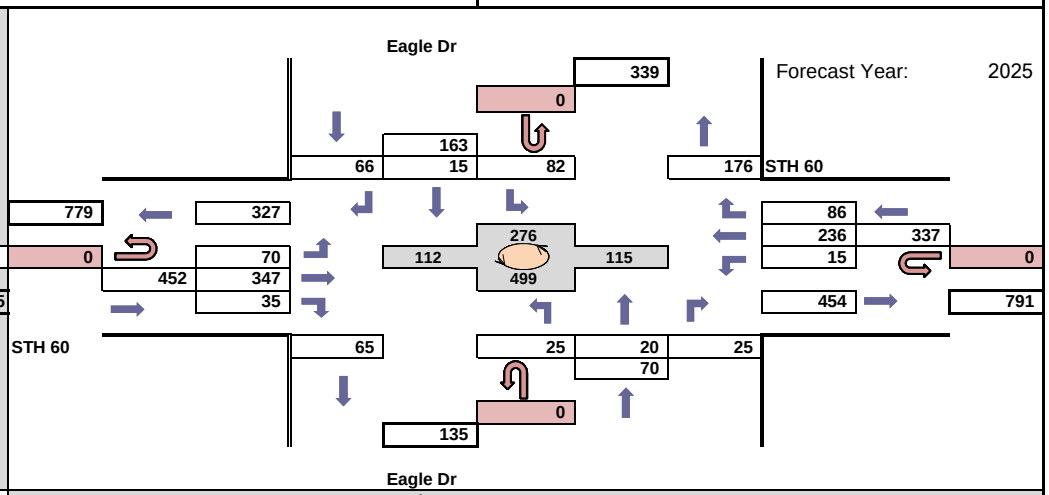

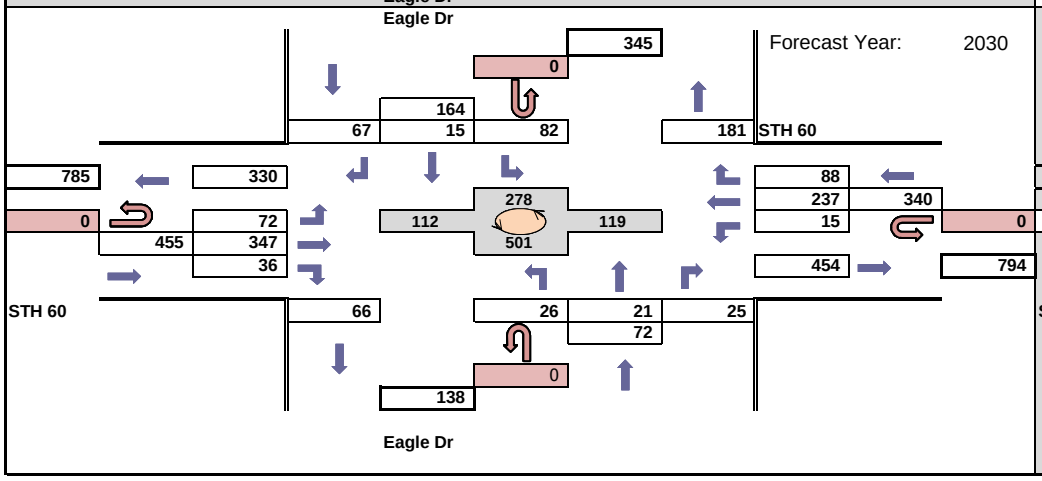

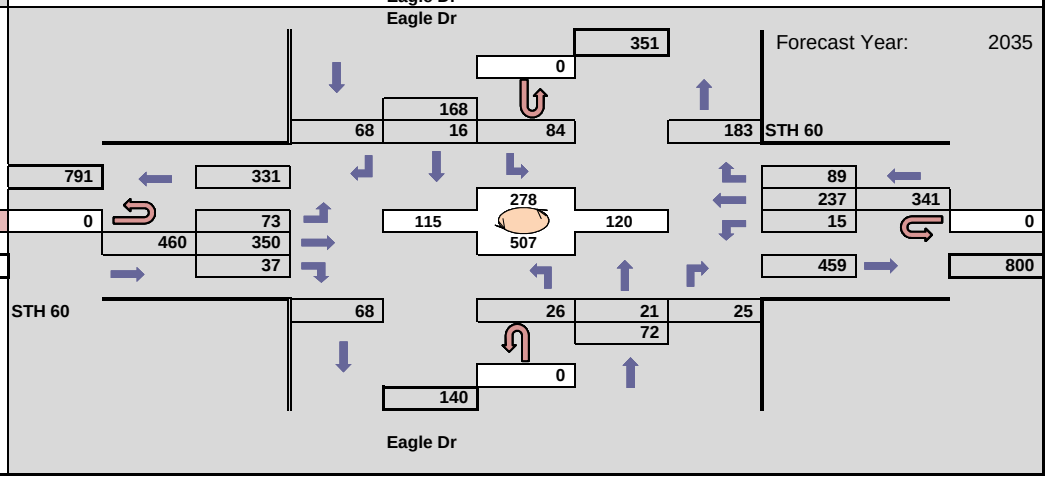

WisDot Southeast Region
Planning Unit 1
Forecast by: Brent DesRoches
Phone: 262-548-5611
Email: brent.desroches@dot.wi.gov

Projected SAT Midday Design Hour Traffic Volumes

Indicates roundabout

Design Hour: 11:00am-12:00pm

Forecast Completed: 4/16/2020

Project Description

Project ID(s): Jackson TIA
Route(s): STH 60
Region/COUNTY(IES): SE / Washington
Location: Jackson Dr to Eagle Dr

Design Hour Turning Movement Data

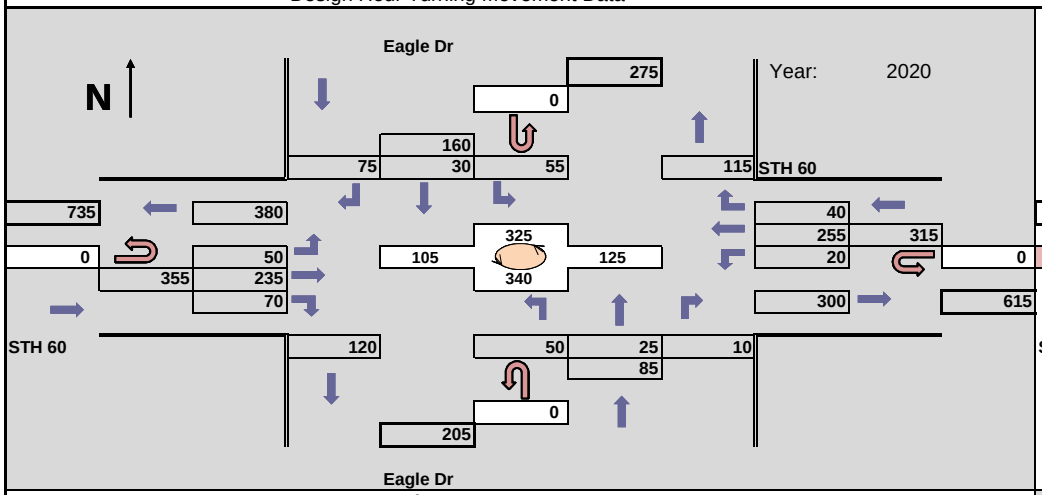

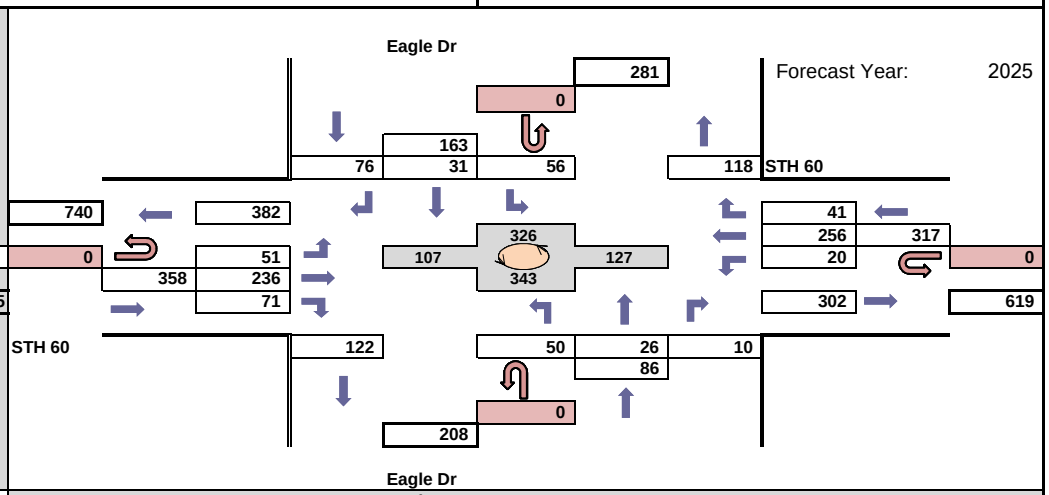

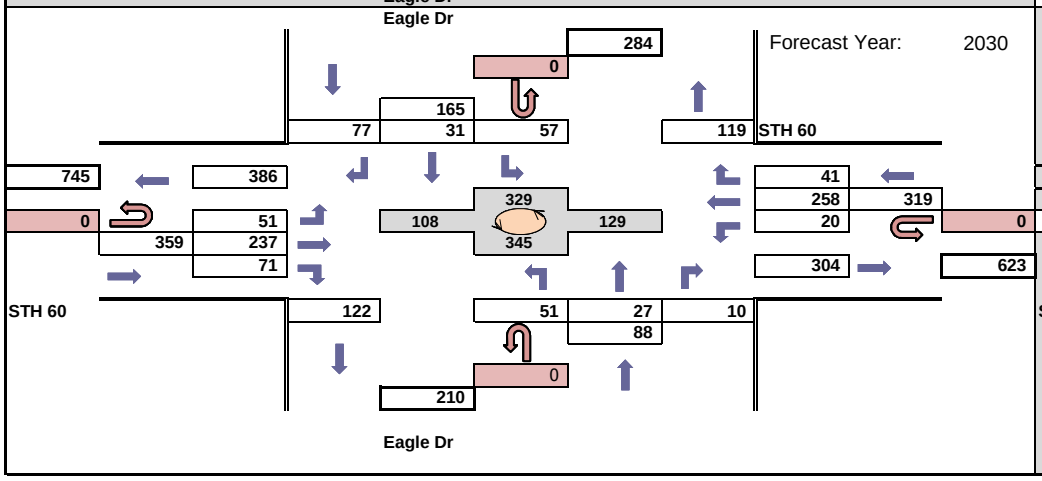

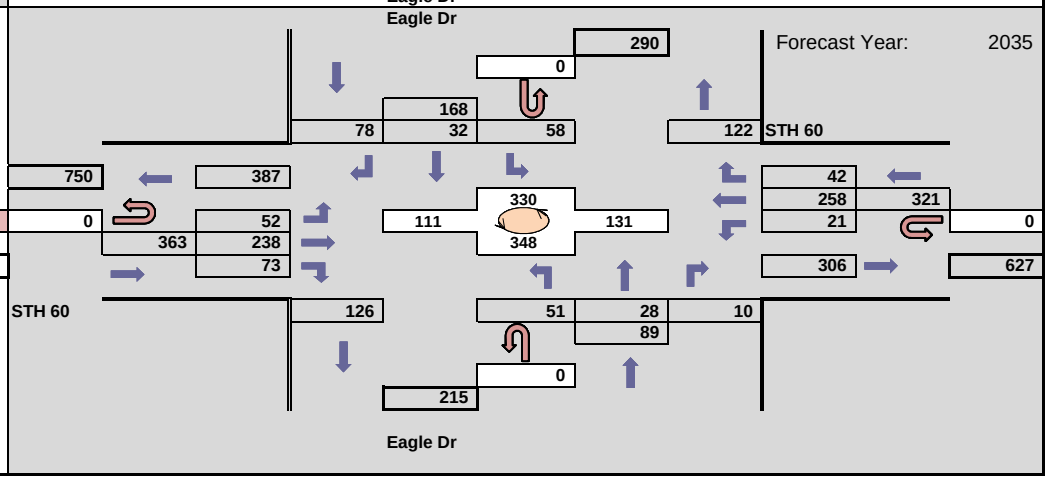

WisDot Southeast Region
Planning Unit 1
Forecast by: Brent DesRoches
Phone: 262-548-5611
Email: brent.desroches@dot.wi.gov

Projected PM Design Hour Traffic Volumes

Indicates roundabout

Design Hour: 4:30-5:30pm

Forecast Completed: 4/16/2020

Design Hour Turning Movement Data

Project Description

Project ID(s): Jackson TIA
Route(s): STH 60
Region/COUNTY(IES): SE / Washington
Location: Jackson Dr to Eagle Dr

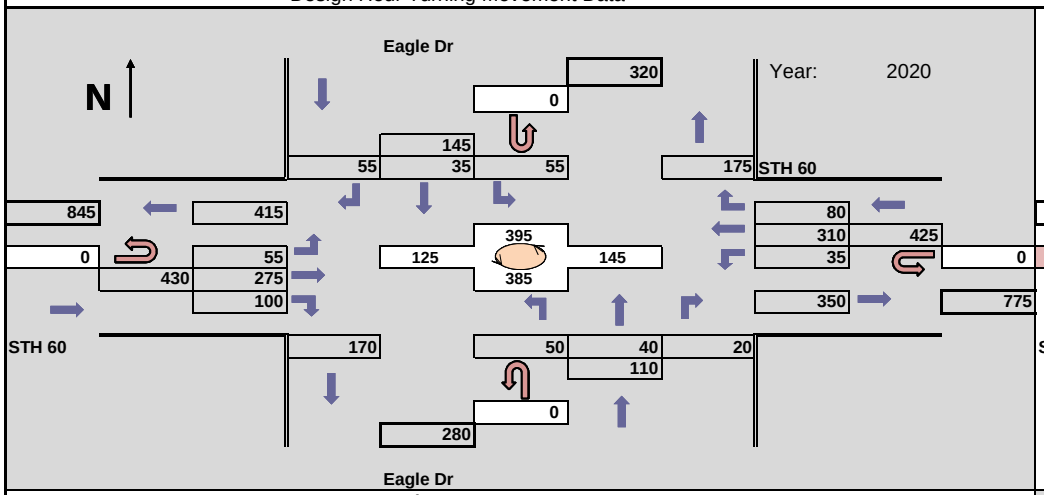

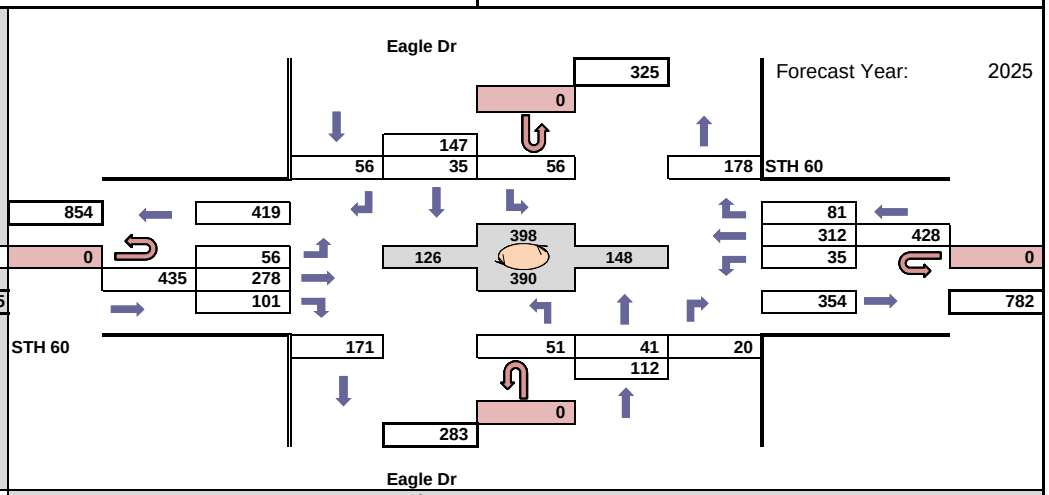

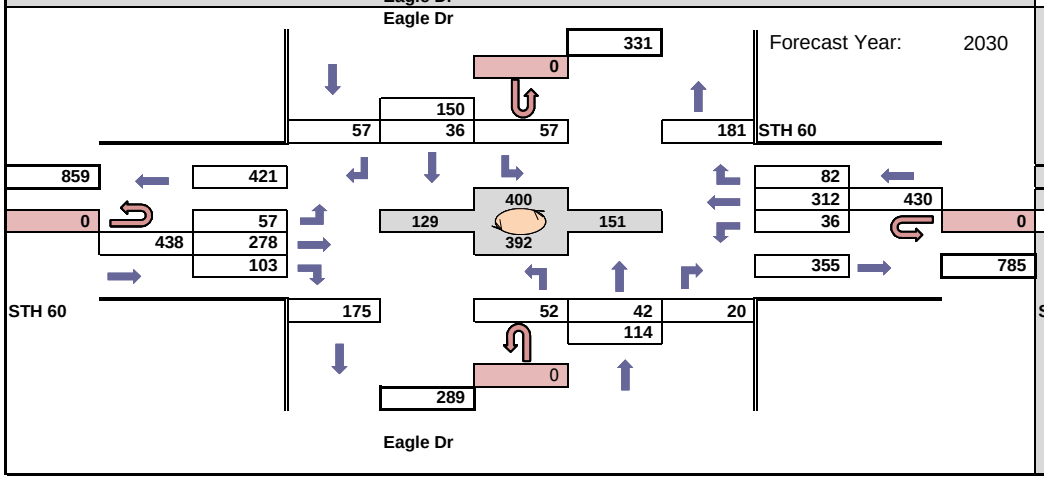

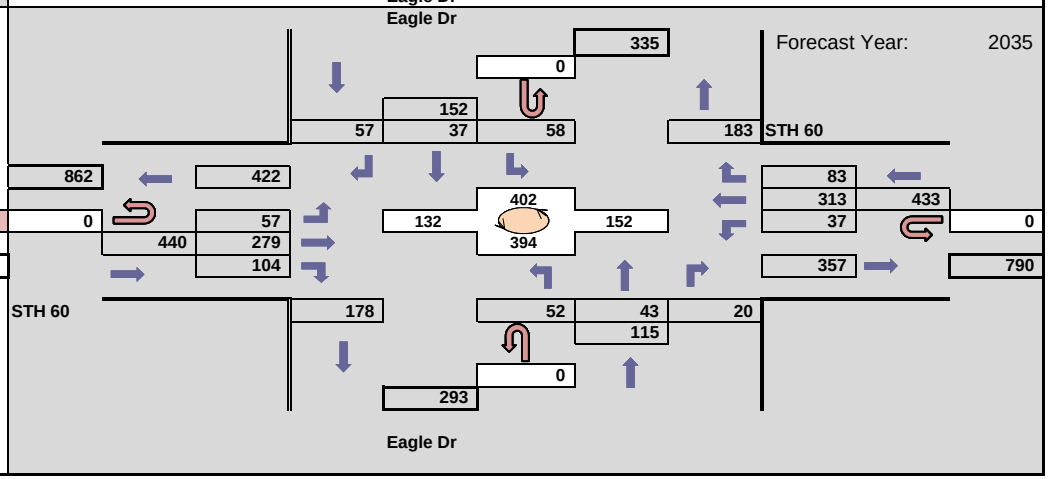

Attachment 5 – Predictive Safety Analysis

Interactive Highway Safety Design Model

Crash Prediction Evaluation Report

February 8, 2022

Disclaimer

The Interactive Highway Design Model (IHSDM) software is disseminated under the sponsorship of the Department of Transportation in the interest of information exchange. The United States Government assumes no liability for its content or use thereof. This document does not constitute a standard, specification, or regulation.

The United States Government does not endorse products or manufacturers. Trade and manufacturers' names may appear in this software and documentation only because they are considered essential to the objective of the software.

Limited Warranty and Limitations of Remedies

This software product is provided "as-is," without warranty of any kind-either expressed or implied (but not limited to the implied warranties of merchantability and fitness for a particular purpose). The FHWA do not warrant that the functions contained in the software will meet the end-user's requirements or that the operation of the software will be uninterrupted and error-free.

Under no circumstances will the FHWA be liable to the end-user for any damages or claimed lost profits, lost savings, or other incidental or consequential damages rising out of the use or inability to use the software (even if these organizations have been advised of the possibility of such damages), or for any claim by any other party.

Notice

The use of the IHSDM software is being done strictly on a voluntary basis. In exchange for provision of IHSDM, the user agrees that the Federal Highway Administration (FHWA), U.S. Department of Transportation and any other agency of the Federal Government shall not be responsible for any errors, damage or other liability that may result from any and all use of the software, including installation and testing of the software. The user further agrees to hold the FHWA and the Federal Government harmless from any resulting liability. The user agrees that this hold harmless provision shall flow to any person to whom or any entity to which the user provides the IHSDM software. It is the user's full responsibility to inform any person to whom or any entity to which it provides the IHSDM software of this hold harmless provision.

Table of Contents

Report Overview **1**
Disclaimer Regarding Crash Prediction Method 1
Section Types **3**
Urban Arterial Site Set CPM Evaluation 3

List of Tables

Table Evaluation and Crash Data (CSD) (if applicable) Intersection Sites 4
Table Predicted Crash Frequencies and Rates by Site 5
Table Predicted Crash Frequencies by Year (4ST) 5
Table Predicted 4ST Crash Type Distribution 6

Report Overview

Report Generated: Feb 8, 2022 2:41 PM
Report Template: System: Multi-Page [System] (sscpm2, Jun 24, 2021 3:45 PM)

Evaluation Date: Tue Feb 08 09:51:34 CST 2022
IHSDM Version: v16.0.0 (Sep 30, 2020)
Site Set Crash Prediction Module: v|ModuleInfo.moduleVersion| (|ModuleInfo.moduleDate|)

User Name: Matt Flanagan
Organization Name: SRF Consulting Group
Phone: 608.298.5400
E-Mail: mflanagan@srfconsulting.com

Project Title: WIS 60 & Eagle Drive
Project Comment: -
Project Unit System: U.S. Customary

Site Set: No-Build Conditions
Site Set Comment: -
Site Set Version: v4

Evaluation Title: 2025-2034 No Build Conditions - WIS 60 & Eagle Drive
Evaluation Comment: Created Tue Feb 08 09:51:21 CST 2022
Policy for Superelevation: AASHTO 2011 U.S. Customary
Calibration: WisDOTCalibration_v16-0
Crash Distribution: WisDOTDistribution_v16-0
Model/CMF: WisDOTConfiguration_v16-0
Note: A Model Data Set other than the HSM (Highway Safety Manual) Configuration was selected for this Evaluation. If Crash Modification Factors (CMFs) were modified, then the results will not be in accordance with the HSM (see HSM Appendix to Part C, section A.1.3).
First Year of Analysis: 2025
Last Year of Analysis: 2034
Empirical-Bayes Analysis: None

Disclaimer Regarding Crash Prediction Method

IMPORTANT NOTICE ABOUT COMPARING RESULTS FROM HIGHWAY SAFETY MANUAL FIRST EDITION (2010) MODELS TO RESULTS FROM NEW MODELS DEVELOPED UNDER NCHRP PROJECTS 17-70 AND 17-58

Since the publication of the Highway Safety Manual - First Edition (HSM-1), in 2010 by the American Association of State

Highway and Transportation Officials (AASHTO), multiple research efforts have been undertaken through the National Cooperative Highway Research Program (NCHRP) to develop safety performance models for road segment and intersection facility types that were not initially reflected in the HSM-1, in order to expand the breadth and depth of the HSM in the future.

The IHSDM Crash Prediction Module (CPM) is intended as a faithful implementation of HSM Part C predictive methods. As NCHRP projects to develop new predictive methods for the HSM are completed, FHWA works to incorporate the new methods into IHSDM, sometimes in advance of publication in the HSM. The following new crash predictive methods have been accepted by NCHRP project panels and incorporated into IHSDM, while pending AASHTO's approval for incorporation into a future edition of the HSM:

- Roundabouts: completed in 2018 under NCHRP Project 17-70, the new methods will provide improved outcomes for the safety analysis of roundabouts.
- 6+ lane and one-way urban/suburban arterials (including models for segments and intersections): completed under NCHRP Project 17-58.

However, in the absence of local calibration factors (see HSM-1 Part C, Appendix A for guidance on calibration of the predictive models), it is neither appropriate nor advisable to directly compare the results from new models (from NCHRP Projects 17-58 and 17-70) to results from HSM-1 models, as the models were not calibrated to the same base state data sets, and consequently can produce unexpected results. If local calibration factors are available and applied to both new models and HSM-1 models, then it may be appropriate to directly compare the results.*[Note: Work being performed under NCHRP Project 17-72 (Update of Crash Modification Factors for the Highway Safety Manual) is expected to re-calibrate many of the old (HSM-1) and new (e.g., NCHRP 17-70) models to data from a single (or small number of) states, that would allow results from all models to be directly compared.]*

The models produced for NCHRP Project 17-70 have independent value in terms of informing the design of a roundabout and assessing the effects of different design characteristics on the expected safety performance of a roundabout.

The HSM-1 interim method previously included in IHSDM for evaluating roundabouts on urban/suburban arterials (i.e., evaluating an existing intersection and then applying a Crash Modification Factor for replacing the existing intersection with a roundabout) has been deactivated in IHSDM, to minimize any confusion with the new roundabout methodology.

Section Types

Urban Arterial Site Set CPM Evaluation

Site Type

Type: 4ST
Calibration Factor: 1

Table 1. Evaluation and Crash Data (CSD) (if applicable) Intersection Sites

Site No.	Type	Highway	Site Description	Major AADT	Minor AADT	Number of Approaches with Left-Turn Lanes	Number of Approaches with Right-Turn Lanes	Presence of Lighting
1	4ST2x2le5	WIS 60 & Eagle Drive	No-Build Conditions	2025: 8908; 2026: 8943; 2027: 8978; 2028: 9013; 2029: 9048; 2030: 9082; 2031: 9117; 2032: 9152; 2033: 9187; 2034: 9222	2025: 4710; 2026: 4728; 2027: 4747; 2028: 4765; 2029: 4784; 2030: 4802; 2031: 4820; 2032: 4839; 2033: 4857; 2034: 4876	2	1	yes

Table 2. Predicted Crash Frequencies and Rates by Site

Site No.	Type	Highway	Site Description	Total Predicted Crashes for Evaluation Period	Predicted Total Crash Frequency (crashes/yr)	Predicted FI Crash Frequency (crashes/yr)	Predicted PDO Crash Frequency (crashes/yr)	Predicted Intersection Travel Crash Rate (crashes/million veh)	Intersection Crash Rate (crashes/yr)
1	4ST	WIS 60 & Eagle Drive	No-Build Conditions	8.203	0.8203	0.2590	0.5613	0.16	0.8203
		Total	Total	8.203	0.8203	0.2590	0.5613	0.16	0.8203

Table 3. Predicted Crash Frequencies by Year (4ST)

Year	Total Crashes	FI Crashes	Percent FI (%)	PDO Crashes	Percent PDO (%)
2025	0.81	0.25	31.499	0.55	68.501
2026	0.81	0.26	31.516	0.55	68.484
2027	0.81	0.26	31.534	0.56	68.466
2028	0.82	0.26	31.551	0.56	68.449
2029	0.82	0.26	31.568	0.56	68.432
2030	0.82	0.26	31.585	0.56	68.415
2031	0.82	0.26	31.602	0.56	68.398
2032	0.83	0.26	31.619	0.57	68.381
2033	0.83	0.26	31.636	0.57	68.364
2034	0.83	0.26	31.653	0.57	68.347
Total	8.20	2.59	31.577	5.61	68.423
Average	0.82	0.26	31.577	0.56	68.423

Note: *Fatal and Injury Crashes* and *Property Damage Only Crashes* do not necessarily sum up to *Total Crashes* because the distribution of these three crashes had been derived independently.

Table 4. Predicted 4ST Crash Type Distribution

Element Type	Crash Type	Fatal and Injury		Property Damage Only		Total	
		Crashes	Crashes (%)	Crashes	Crashes (%)	Crashes	Crashes (%)
Intersection	Collision with Animal	0.00	0.0	0.02	0.3	0.02	0.3
Intersection	Collision with Bicycle	0.14	2.3	0.00	0.0	0.14	2.3
Intersection	Collision with Fixed Object	0.00	0.0	0.00	0.0	0.00	0.0
Intersection	Non-Collision	0.00	0.0	0.00	0.0	0.00	0.0
Intersection	Collision with Other Object	0.00	0.0	0.00	0.0	0.00	0.0
Intersection	Other Single-vehicle Collision	0.03	0.4	0.14	2.3	0.17	2.7
Intersection	Collision with Parked Vehicle	0.00	0.0	0.00	0.0	0.00	0.0
Intersection	Collision with Pedestrian	0.17	2.8	0.00	0.0	0.17	2.8
Intersection	Total Intersection Single Vehicle Crashes	0.34	5.6	0.16	2.6	0.50	8.2
Intersection	Angle Collision	1.00	16.3	1.55	25.4	2.55	41.7
Intersection	Head-on Collision	0.00	0.0	0.00	0.0	0.00	0.0
Intersection	Other Multi-vehicle Collision	0.04	0.6	0.09	1.5	0.13	2.1
Intersection	Rear-end Collision	0.59	9.6	1.29	21.1	1.88	30.7
Intersection	Sideswipe	0.16	2.6	0.90	14.7	1.06	17.3
Intersection	Total Intersection Multiple Vehicle Crashes	1.78	29.1	3.84	62.7	5.62	91.8
Intersection	Total Intersection Crashes	2.13	34.7	4.00	65.3	6.12	100.0
	Total Crashes	2.13	34.7	4.00	65.3	6.12	100.0

Note: *Fatal and Injury Crashes* and *Property Damage Only Crashes* do not necessarily sum up to *Total Crashes* because the distribution of these three crashes had been derived independently.

Interactive Highway Safety Design Model

Crash Prediction Evaluation Report

February 8, 2022

Disclaimer

The Interactive Highway Design Model (IHSDM) software is disseminated under the sponsorship of the Department of Transportation in the interest of information exchange. The United States Government assumes no liability for its content or use thereof. This document does not constitute a standard, specification, or regulation.

The United States Government does not endorse products or manufacturers. Trade and manufacturers' names may appear in this software and documentation only because they are considered essential to the objective of the software.

Limited Warranty and Limitations of Remedies

This software product is provided "as-is," without warranty of any kind-either expressed or implied (but not limited to the implied warranties of merchantability and fitness for a particular purpose). The FHWA do not warrant that the functions contained in the software will meet the end-user's requirements or that the operation of the software will be uninterrupted and error-free.

Under no circumstances will the FHWA be liable to the end-user for any damages or claimed lost profits, lost savings, or other incidental or consequential damages rising out of the use or inability to use the software (even if these organizations have been advised of the possibility of such damages), or for any claim by any other party.

Notice

The use of the IHSDM software is being done strictly on a voluntary basis. In exchange for provision of IHSDM, the user agrees that the Federal Highway Administration (FHWA), U.S. Department of Transportation and any other agency of the Federal Government shall not be responsible for any errors, damage or other liability that may result from any and all use of the software, including installation and testing of the software. The user further agrees to hold the FHWA and the Federal Government harmless from any resulting liability. The user agrees that this hold harmless provision shall flow to any person to whom or any entity to which the user provides the IHSDM software. It is the user's full responsibility to inform any person to whom or any entity to which it provides the IHSDM software of this hold harmless provision.

Table of Contents

Report Overview **1**
Disclaimer Regarding Crash Prediction Method 1
Section Types **3**
Urban Arterial Site Set CPM Evaluation 3

List of Tables

Table Evaluation and Crash Data (CSD) (if applicable) Intersection Sites 4
Table Predicted Crash Frequencies and Rates by Site 5
Table Predicted Crash Frequencies by Year (4SG) 5
Table Predicted 4SG Crash Type Distribution 6

Report Overview

Report Generated: Feb 8, 2022 2:39 PM
Report Template: System: Multi-Page [System] (sscpm2, Jun 24, 2021 3:45 PM)

Evaluation Date: Tue Feb 08 14:31:34 CST 2022
IHSDM Version: v16.0.0 (Sep 30, 2020)
Site Set Crash Prediction Module: v|ModuleInfo.moduleVersion| (|ModuleInfo.moduleDate|)

User Name: Matt Flanagan
Organization Name: SRF Consulting Group
Phone: 608.298.5400
E-Mail: mflanagan@srfconsulting.com

Project Title: WIS 60 & Eagle Drive
Project Comment: -
Project Unit System: U.S. Customary

Site Set: Build - Signal
Site Set Comment: -
Site Set Version: v6

Evaluation Title: 2025-2034 Build Signal - WIS 60 & Eagle Drive
Evaluation Comment: Created Tue Feb 08 14:31:13 CST 2022
Policy for Superelevation: AASHTO 2011 U.S. Customary
Calibration: WisDOTCalibration_v16-0
Crash Distribution: WisDOTDistribution_v16-0
Model/CMF: WisDOTConfiguration_v16-0
Note: A Model Data Set other than the HSM (Highway Safety Manual) Configuration was selected for this Evaluation. If Crash Modification Factors (CMFs) were modified, then the results will not be in accordance with the HSM (see HSM Appendix to Part C, section A.1.3).
First Year of Analysis: 2025
Last Year of Analysis: 2034
Empirical-Bayes Analysis: None

Disclaimer Regarding Crash Prediction Method

IMPORTANT NOTICE ABOUT COMPARING RESULTS FROM HIGHWAY SAFETY MANUAL FIRST EDITION (2010) MODELS TO RESULTS FROM NEW MODELS DEVELOPED UNDER NCHRP PROJECTS 17-70 AND 17-58

Since the publication of the Highway Safety Manual - First Edition (HSM-1), in 2010 by the American Association of State

Highway and Transportation Officials (AASHTO), multiple research efforts have been undertaken through the National Cooperative Highway Research Program (NCHRP) to develop safety performance models for road segment and intersection facility types that were not initially reflected in the HSM-1, in order to expand the breadth and depth of the HSM in the future.

The IHSDM Crash Prediction Module (CPM) is intended as a faithful implementation of HSM Part C predictive methods. As NCHRP projects to develop new predictive methods for the HSM are completed, FHWA works to incorporate the new methods into IHSDM, sometimes in advance of publication in the HSM. The following new crash predictive methods have been accepted by NCHRP project panels and incorporated into IHSDM, while pending AASHTO's approval for incorporation into a future edition of the HSM:

- Roundabouts: completed in 2018 under NCHRP Project 17-70, the new methods will provide improved outcomes for the safety analysis of roundabouts.
- 6+ lane and one-way urban/suburban arterials (including models for segments and intersections): completed under NCHRP Project 17-58.

However, in the absence of local calibration factors (see HSM-1 Part C, Appendix A for guidance on calibration of the predictive models), it is neither appropriate nor advisable to directly compare the results from new models (from NCHRP Projects 17-58 and 17-70) to results from HSM-1 models, as the models were not calibrated to the same base state data sets, and consequently can produce unexpected results. If local calibration factors are available and applied to both new models and HSM-1 models, then it may be appropriate to directly compare the results.*[Note: Work being performed under NCHRP Project 17-72 (Update of Crash Modification Factors for the Highway Safety Manual) is expected to re-calibrate many of the old (HSM-1) and new (e.g., NCHRP 17-70) models to data from a single (or small number of) states, that would allow results from all models to be directly compared.]*

The models produced for NCHRP Project 17-70 have independent value in terms of informing the design of a roundabout and assessing the effects of different design characteristics on the expected safety performance of a roundabout.

The HSM-1 interim method previously included in IHSDM for evaluating roundabouts on urban/suburban arterials (i.e., evaluating an existing intersection and then applying a Crash Modification Factor for replacing the existing intersection with a roundabout) has been deactivated in IHSDM, to minimize any confusion with the new roundabout methodology.

Section Types

Urban Arterial Site Set CPM Evaluation

Site Type

Type: 4SG
Calibration Factor: 1

Table 1. Evaluation and Crash Data (CSD) (if applicable) Intersection Sites

Site No.	Type	Highway	Site Description	Major AADT	Minor AADT	Number of Approaches with Left-Turn Lanes	Number of Approaches with Right-Turn Lanes	Presence of Lighting	Number of Approaches with Permissive Left-Turn Phasing	Number of Approaches with Permissive/Protected or Protected/Permissive Left-Turn Phasing	Number of Approaches with Protected Left-Turn Phasing	Number of Approaches on which Right Turn on Red is Prohibited	Presence of Red-Light Cameras	Pedestrian Volumes Crossing all Intersection Legs (crossings/day)	Max. Number of Lanes Crossed by Pedestrians	Number of Bus Stops within 1000 ft of Intersection	Number of Schools within 1000 ft of Intersection	Number of Alcohol Sales Establishments within 1000 ft of Intersection
1	4SG2x2le5	WIS 60 & Eagle Drive	Build - Signal	2025: 8908; 2026: 8943; 2027: 8978; 2028: 9013; 2029: 9048; 2030: 9082; 2031: 9117; 2032: 9152; 2033: 9187; 2034: 9222	2025: 4710; 2026: 4728; 2027: 4747; 2028: 4765; 2029: 4784; 2030: 4802; 2031: 4820; 2032: 4839; 2033: 4857; 2034: 4876	4	2	yes	4	0	0	0	no	50	4	0	0	0

Table 2. Predicted Crash Frequencies and Rates by Site

Site No.	Type	Highway	Site Description	Total Predicted Crashes for Evaluation Period	Predicted Total Crash Frequency (crashes/yr)	Predicted FI Crash Frequency (crashes/yr)	Predicted PDO Crash Frequency (crashes/yr)	Predicted Intersection Travel Crash Rate (crashes/million veh)	Intersection Crash Rate (crashes/yr)
1	4SG	WIS 60 & Eagle Drive	Build - Signal	16.603	1.6603	0.4964	1.1639	0.33	1.6603
		Total	Total	16.603	1.6603	0.4964	1.1639	0.33	1.6603

Table 3. Predicted Crash Frequencies by Year (4SG)

Year	Total Crashes	FI Crashes	Percent FI (%)	PDO Crashes	Percent PDO (%)
2025	1.62	0.48	29.859	1.14	70.141
2026	1.63	0.49	29.867	1.15	70.133
2027	1.64	0.49	29.876	1.15	70.124
2028	1.65	0.49	29.885	1.16	70.115
2029	1.66	0.49	29.893	1.16	70.107
2030	1.66	0.50	29.901	1.17	70.099
2031	1.67	0.50	29.910	1.17	70.090
2032	1.68	0.50	29.918	1.18	70.082
2033	1.69	0.51	29.927	1.18	70.073
2034	1.70	0.51	29.935	1.19	70.065
Total	16.60	4.96	29.898	11.64	70.103
Average	1.66	0.50	29.898	1.16	70.103

Note: *Fatal and Injury Crashes* and *Property Damage Only Crashes* do not necessarily sum up to *Total Crashes* because the distribution of these three crashes had been derived

independently.

Table 4. Predicted 4SG Crash Type Distribution

Element Type	Crash Type	Fatal and Injury		Property Damage Only		Total	
		Crashes	Crashes (%)	Crashes	Crashes (%)	Crashes	Crashes (%)
Intersection	Collision with Animal	0.00	0.0	0.02	0.1	0.02	0.1
Intersection	Collision with Bicycle	0.24	1.6	0.00	0.0	0.24	1.6
Intersection	Collision with Fixed Object	0.00	0.0	0.00	0.0	0.00	0.0
Intersection	Non-Collision	0.00	0.0	0.00	0.0	0.00	0.0
Intersection	Collision with Other Object	0.00	0.0	0.00	0.0	0.00	0.0
Intersection	Other Single-vehicle Collision	0.01	0.0	0.02	0.2	0.03	0.2
Intersection	Collision with Parked Vehicle	0.00	0.0	0.00	0.0	0.00	0.0
Intersection	Collision with Pedestrian	0.19	1.3	0.00	0.0	0.19	1.3
Intersection	Total Intersection Single Vehicle Crashes	0.44	3.0	0.04	0.3	0.48	3.3
Intersection	Angle Collision	1.84	12.5	3.18	21.5	5.03	34.0
Intersection	Head-on Collision	0.00	0.0	0.00	0.0	0.00	0.0
Intersection	Other Multi-vehicle Collision	0.10	0.7	0.91	6.1	1.01	6.8
Intersection	Rear-end Collision	2.06	14.0	4.16	28.1	6.22	42.1
Intersection	Sideswipe	0.19	1.3	1.85	12.5	2.04	13.8
Intersection	Total Intersection Multiple Vehicle Crashes	4.20	28.4	10.10	68.4	14.30	96.7
Intersection	Total Intersection Crashes	4.63	31.3	10.15	68.7	14.78	100.0
	Total Crashes	4.63	31.3	10.15	68.7	14.78	100.0

Note: *Fatal and Injury Crashes* and *Property Damage Only Crashes* do not necessarily sum up to *Total Crashes* because the distribution of these three crashes had been derived independently.

Interactive Highway Safety Design Model

Crash Prediction Evaluation Report

February 8, 2022

Disclaimer

The Interactive Highway Design Model (IHSDM) software is disseminated under the sponsorship of the Department of Transportation in the interest of information exchange. The United States Government assumes no liability for its content or use thereof. This document does not constitute a standard, specification, or regulation.

The United States Government does not endorse products or manufacturers. Trade and manufacturers' names may appear in this software and documentation only because they are considered essential to the objective of the software.

Limited Warranty and Limitations of Remedies

This software product is provided "as-is," without warranty of any kind-either expressed or implied (but not limited to the implied warranties of merchantability and fitness for a particular purpose). The FHWA do not warrant that the functions contained in the software will meet the end-user's requirements or that the operation of the software will be uninterrupted and error-free.

Under no circumstances will the FHWA be liable to the end-user for any damages or claimed lost profits, lost savings, or other incidental or consequential damages rising out of the use or inability to use the software (even if these organizations have been advised of the possibility of such damages), or for any claim by any other party.

Notice

The use of the IHSDM software is being done strictly on a voluntary basis. In exchange for provision of IHSDM, the user agrees that the Federal Highway Administration (FHWA), U.S. Department of Transportation and any other agency of the Federal Government shall not be responsible for any errors, damage or other liability that may result from any and all use of the software, including installation and testing of the software. The user further agrees to hold the FHWA and the Federal Government harmless from any resulting liability. The user agrees that this hold harmless provision shall flow to any person to whom or any entity to which the user provides the IHSDM software. It is the user's full responsibility to inform any person to whom or any entity to which it provides the IHSDM software of this hold harmless provision.

Table of Contents

Report Overview **1**
Disclaimer Regarding Crash Prediction Method 1
Section Types **3**
Roundabout Site Set CPM Evaluation 3

List of Tables

Table Evaluation and Crash Data (CSD) (if applicable) Roundabout - Homogeneous Sites 4
Table Predicted Crash Frequencies and Rates by Site 5
Table Predicted Crash Frequencies by Year (Roundabout USA 41R) 5
Table Predicted Roundabout USA 41R Crash Severity 6
Table Predicted Roundabout USA 41R Crash Type Distribution 6

Report Overview

Report Generated: Feb 8, 2022 2:40 PM
Report Template: System: Multi-Page [System] (sscpm2, Jun 24, 2021 3:45 PM)

Evaluation Date: Tue Feb 08 14:35:41 CST 2022
IHSDM Version: v16.0.0 (Sep 30, 2020)
Site Set Crash Prediction Module: v|ModuleInfo.moduleVersion| (|ModuleInfo.moduleDate|)

User Name: Matt Flanagan
Organization Name: SRF Consulting Group
Phone: 608.298.5400
E-Mail: mflanagan@srfconsulting.com

Project Title: WIS 60 & Eagle Drive
Project Comment: -
Project Unit System: U.S. Customary

Site Set: Build - RAB
Site Set Comment: -
Site Set Version: v6

Evaluation Title: 2025-2034 Build RAB - WIS 60 & Eagle Drive
Evaluation Comment: Created Tue Feb 08 14:35:25 CST 2022
Policy for Superelevation: AASHTO 2011 U.S. Customary
Calibration: WisDOTCalibration_v16-0
Crash Distribution: WisDOTDistribution_v16-0
Model/CMF: WisDOTConfiguration_v16-0
Note: A Model Data Set other than the HSM (Highway Safety Manual) Configuration was selected for this Evaluation. If Crash Modification Factors (CMFs) were modified, then the results will not be in accordance with the HSM (see HSM Appendix to Part C, section A.1.3).
First Year of Analysis: 2025
Last Year of Analysis: 2034
Empirical-Bayes Analysis: None

Disclaimer Regarding Crash Prediction Method

IMPORTANT NOTICE ABOUT COMPARING RESULTS FROM HIGHWAY SAFETY MANUAL FIRST EDITION (2010) MODELS TO RESULTS FROM NEW MODELS DEVELOPED UNDER NCHRP PROJECTS 17-70 AND 17-58

Since the publication of the Highway Safety Manual - First Edition (HSM-1), in 2010 by the American Association of State

Highway and Transportation Officials (AASHTO), multiple research efforts have been undertaken through the National Cooperative Highway Research Program (NCHRP) to develop safety performance models for road segment and intersection facility types that were not initially reflected in the HSM-1, in order to expand the breadth and depth of the HSM in the future.

The IHSDM Crash Prediction Module (CPM) is intended as a faithful implementation of HSM Part C predictive methods. As NCHRP projects to develop new predictive methods for the HSM are completed, FHWA works to incorporate the new methods into IHSDM, sometimes in advance of publication in the HSM. The following new crash predictive methods have been accepted by NCHRP project panels and incorporated into IHSDM, while pending AASHTO's approval for incorporation into a future edition of the HSM:

- Roundabouts: completed in 2018 under NCHRP Project 17-70, the new methods will provide improved outcomes for the safety analysis of roundabouts.
- 6+ lane and one-way urban/suburban arterials (including models for segments and intersections): completed under NCHRP Project 17-58.

However, in the absence of local calibration factors (see HSM-1 Part C, Appendix A for guidance on calibration of the predictive models), it is neither appropriate nor advisable to directly compare the results from new models (from NCHRP Projects 17-58 and 17-70) to results from HSM-1 models, as the models were not calibrated to the same base state data sets, and consequently can produce unexpected results. If local calibration factors are available and applied to both new models and HSM-1 models, then it may be appropriate to directly compare the results.*[Note: Work being performed under NCHRP Project 17-72 (Update of Crash Modification Factors for the Highway Safety Manual) is expected to re-calibrate many of the old (HSM-1) and new (e.g., NCHRP 17-70) models to data from a single (or small number of) states, that would allow results from all models to be directly compared.]*

The models produced for NCHRP Project 17-70 have independent value in terms of informing the design of a roundabout and assessing the effects of different design characteristics on the expected safety performance of a roundabout.

The HSM-1 interim method previously included in IHSDM for evaluating roundabouts on urban/suburban arterials (i.e., evaluating an existing intersection and then applying a Crash Modification Factor for replacing the existing intersection with a roundabout) has been deactivated in IHSDM, to minimize any confusion with the new roundabout methodology.

Section Types

Roundabout Site Set CPM Evaluation

Site Type

Type: Roundabout USA 41R
Calibration Factor: USA 41R = 1.0

Table 1. Evaluation and Crash Data (CSD) (if applicable) Roundabout - Homogeneous Sites

Site No.	Type	Roundabout	Site Description	Area Type	Entering AADT
1	41R - Roundabout with 4 legs and a single circulating lane	WIS 60 & Eagle Drive	Build RAB	Urban	Leg 1:2025: 2213; 2026: 2222; 2027: 2230; 2028: 2239; 2029: 2248; 2030: 2256; 2031: 2265; 2032: 2273; 2033: 2282; 2034: 2291; Leg 2:2025: 3538; 2026: 3552; 2027: 3566; 2028: 3580; 2029: 3594; 2030: 3607; 2031: 3621; 2032: 3635; 2033: 3649; 2034: 3663; Leg 3:2025: 675; 2026: 678; 2027: 680; 2028: 683; 2029: 686; 2030: 688; 2031: 691; 2032: 693; 2033: 696; 2034: 699; Leg 4:2025: 4899; 2026: 4918; 2027: 4937; 2028: 4956; 2029: 4976; 2030: 4995; 2031: 5014; 2032: 5033; 2033: 5052; 2034: 5071

Table 2. Predicted Crash Frequencies and Rates by Site

Site No.	Type	Roundabout	Site Description	Total Predicted Crashes for Evaluation Period	Predicted Total Crash Frequency (crashes/yr)	Predicted FI Crash Frequency (crashes/yr)	Predicted PDO Crash Frequency (crashes/yr)	Predicted Intersection Travel Crash Rate (crashes/million veh)	Intersection Crash Rate (crashes/yr)
1	41R - Roundabout with 4 legs and a single circulating lane	WIS 60 & Eagle Drive	Build RAB	28.934	2.8934	0.4371	2.4563	1.38	2.8934
		Total	Total	28.934	2.8934	0.4371	2.4563	1.38	2.8934

Table 3. Predicted Crash Frequencies by Year (Roundabout USA 41R)

Year	Total Crashes	FI Crashes	Percent FI (%)	PDO Crashes	Percent PDO (%)
2025	2.86	0.43	15.060	2.43	84.940
2026	2.87	0.43	15.070	2.43	84.930
2027	2.87	0.43	15.081	2.44	84.919
2028	2.88	0.43	15.091	2.45	84.909
2029	2.89	0.44	15.102	2.45	84.898
2030	2.90	0.44	15.112	2.46	84.888
2031	2.91	0.44	15.123	2.47	84.877
2032	2.91	0.44	15.133	2.47	84.867
2033	2.92	0.44	15.144	2.48	84.856
2034	2.93	0.44	15.154	2.49	84.846
Total	28.93	4.37	15.107	24.56	84.893
Average	2.89	0.44	15.107	2.46	84.893

Note: *Fatal and Injury Crashes* and *Property Damage Only Crashes* do not necessarily sum up to *Total Crashes* because the distribution of these three crashes had been derived independently.

Table 4. Predicted Roundabout USA 41R Crash Severity

Site No.	Fatal (K) Crashes (crashes)	Incapacitating Injury (A) Crashes (crashes)	Non-Incapacitating Injury (B) Crashes (crashes)	Possible Injury (C) Crashes (crashes)	No Injury (O) Crashes (crashes)
1	0.0153	0.2441	1.6617	2.4501	24.5626
Total	0.0153	0.2441	1.6617	2.4501	24.5626

Table 5. Predicted Roundabout USA 41R Crash Type Distribution

Element Type	Crash Type	Fatal and Injury		Property Damage Only		Total	
		Crashes	Crashes (%)	Crashes	Crashes (%)	Crashes	Crashes (%)
Intersection	Collision with Animal	0.00	0.0	0.11	0.4	0.11	0.4
Intersection	Collision with Fixed Object	0.95	3.3	8.86	30.7	9.81	33.9
Intersection	Collision with Other Object	0.04	0.1	0.04	0.1	0.08	0.3
Intersection	Other Single-vehicle Collision	1.07	3.7	1.44	5.0	2.51	8.7
Intersection	Collision with Parked Vehicle	0.00	0.0	0.04	0.1	0.04	0.1
Intersection	Total Single Vehicle Crashes	2.06	7.1	10.48	36.3	12.54	43.4
Intersection	Angle Collision	0.54	1.9	4.03	14.0	4.57	15.8
Intersection	Head-on Collision	0.00	0.0	0.07	0.2	0.07	0.2
Intersection	Other Multiple-vehicle Collision	0.04	0.1	0.07	0.2	0.11	0.4
Intersection	Rear-end Collision	1.07	3.7	4.93	17.1	6.01	20.8
Intersection	Sideswipe	0.62	2.1	4.97	17.2	5.59	19.3
Intersection	Total Multiple Vehicle Crashes	2.27	7.8	14.08	48.7	16.35	56.6
Intersection	Total Intersection Crashes	4.33	15.0	24.56	85.0	28.89	100.0
	Total Crashes	4.33	15.0	24.56	85.0	28.89	100.0

Note: *Fatal and Injury Crashes* and *Property Damage Only Crashes* do not necessarily sum up to *Total Crashes* because the distribution of these three crashes had been derived independently.

Attachment 6 – Traffic Operations Outputs

Lane Group	EBL	EBT	EBR	WBL	WBT	WBR	NBL	NBT	NBR	SBL	SBT	SBR
Lane Configurations												
Ideal Flow (vphpl)	1900	1900	1900	1900	1900	1900	1900	1900	1900	1900	1900	1900
Lane Width (ft)	12	12	12	12	12	12	12	12	12	12	12	12
Grade (%)		0%			0%			0%			0%	
Storage Length (ft)	175		0	150		125	0		0	100		0
Storage Lanes	1		0	1		1	0		0	1		0
Taper Length (ft)	25			25			25			25		
Lane Util. Factor	1.00	1.00	1.00	1.00	1.00	1.00	1.00	1.00	1.00	1.00	1.00	1.00
Ped Bike Factor												
Frt		0.986				0.850		0.952			0.878	
Flt Protected	0.950			0.950				0.982		0.950		
Satd. Flow (prot)	1703	1767	0	1736	1827	1553	0	1660	0	1703	1574	0
Flt Permitted	0.950			0.950				0.982		0.950		
Satd. Flow (perm)	1703	1767	0	1736	1827	1553	0	1660	0	1703	1574	0
Link Speed (mph)		35			35			25			25	
Link Distance (ft)		551			1005			508			593	
Travel Time (s)		10.7			19.6			13.9			16.2	

Intersection Summary

Area Type: Other

Lane Group	EBL	EBT	EBR	WBL	WBT	WBR	NBL	NBT	NBR	SBL	SBT	SBR
Traffic Volume (vph)	70	345	35	15	235	85	25	20	25	80	15	65
Future Volume (vph)	70	345	35	15	235	85	25	20	25	80	15	65
Confl. Peds. (#/hr)			1	1								
Confl. Bikes (#/hr)												
Peak Hour Factor	0.84	0.84	0.84	0.84	0.84	0.84	0.84	0.84	0.84	0.84	0.84	0.84
Growth Factor	100%	100%	100%	100%	100%	100%	100%	100%	100%	100%	100%	100%
Heavy Vehicles (%)	6%	6%	6%	4%	4%	4%	7%	7%	7%	6%	6%	6%
Bus Blockages (#/hr)	0	0	0	0	0	0	0	0	0	0	0	0
Parking (#/hr)												
Mid-Block Traffic (%)		0%			0%			0%			0%	
Adj. Flow (vph)	83	411	42	18	280	101	30	24	30	95	18	77
Shared Lane Traffic (%)												
Lane Group Flow (vph)	83	453	0	18	280	101	0	84	0	95	95	0

Intersection Summary

Intersection	
Int Delay, s/veh	6.8

Movement	EBL	EBT	EBR	WBL	WBT	WBR	NBL	NBT	NBR	SBL	SBT	SBR
Lane Configurations												
Traffic Vol, veh/h	70	345	35	15	235	85	25	20	25	80	15	65
Future Vol, veh/h	70	345	35	15	235	85	25	20	25	80	15	65
Conflicting Peds, #/hr	0	0	1	1	0	0	0	0	0	0	0	0
Sign Control	Free	Free	Free	Free	Free	Free	Stop	Stop	Stop	Stop	Stop	Stop
RT Channelized	-	-	None	-	-	None	-	-	None	-	-	None
Storage Length	175	-	-	150	-	125	-	-	-	100	-	-
Veh in Median Storage, #	-	0	-	-	0	-	-	0	-	-	0	-
Grade, %	-	0	-	-	0	-	-	0	-	-	0	-
Peak Hour Factor	84	84	84	84	84	84	84	84	84	84	84	84
Heavy Vehicles, %	6	6	6	4	4	4	7	7	7	6	6	6
Mvmt Flow	83	411	42	18	280	101	30	24	30	95	18	77

Major/Minor	Major1			Major2			Minor1			Minor2		
Conflicting Flow All	381	0	0	454	0	0	1013	1016	433	941	936	280
Stage 1	-	-	-	-	-	-	599	599	-	316	316	-
Stage 2	-	-	-	-	-	-	414	417	-	625	620	-
Critical Hdwy	4.16	-	-	4.14	-	-	7.17	6.57	6.27	7.16	6.56	6.26
Critical Hdwy Stg 1	-	-	-	-	-	-	6.17	5.57	-	6.16	5.56	-
Critical Hdwy Stg 2	-	-	-	-	-	-	6.17	5.57	-	6.16	5.56	-
Follow-up Hdwy	2.254	-	-	2.236	-	-	3.563	4.063	3.363	3.554	4.054	3.354
Pot Cap-1 Maneuver	1156	-	-	1096	-	-	213	233	612	239	261	749
Stage 1	-	-	-	-	-	-	480	483	-	687	648	-
Stage 2	-	-	-	-	-	-	606	583	-	466	474	-
Platoon blocked, %		-	-		-	-						
Mov Cap-1 Maneuver	1156	-	-	1095	-	-	168	212	611	194	238	749
Mov Cap-2 Maneuver	-	-	-	-	-	-	168	212	-	194	238	-
Stage 1	-	-	-	-	-	-	445	448	-	638	638	-
Stage 2	-	-	-	-	-	-	520	574	-	390	439	-

Approach	EB	WB	NB	SB
HCM Control Delay, s	1.3	0.4	27	26.7
HCM LOS			D	D

Minor Lane/Major Mvmt	NBLn1	EBL	EBT	EBR	WBL	WBT	WBR	SBLn1	SBLn2
Capacity (veh/h)	246	1156	-	-	1095	-	-	194	534
HCM Lane V/C Ratio	0.339	0.072	-	-	0.016	-	-	0.491	0.178
HCM Control Delay (s)	27	8.4	-	-	8.3	-	-	40.2	13.2
HCM Lane LOS	D	A	-	-	A	-	-	E	B
HCM 95th %tile Q(veh)	1.4	0.2	-	-	0.1	-	-	2.4	0.6

Lane Group	EBL	EBT	EBR	WBL	WBT	WBR	NBL	NBT	NBR	SBL	SBT	SBR
Lane Configurations												
Ideal Flow (vphpl)	1900	1900	1900	1900	1900	1900	1900	1900	1900	1900	1900	1900
Lane Width (ft)	12	12	12	12	12	12	12	12	12	12	12	12
Grade (%)		0%			0%			0%			0%	
Storage Length (ft)	175		0	150		125	0		0	100		0
Storage Lanes	1		0	1		1	0		0	1		0
Taper Length (ft)	25			25			25			25		
Lane Util. Factor	1.00	1.00	1.00	1.00	1.00	1.00	1.00	1.00	1.00	1.00	1.00	1.00
Ped Bike Factor												
Frt		0.960				0.850		0.976			0.909	
Flt Protected	0.950			0.950				0.978		0.950		
Satd. Flow (prot)	1770	1788	0	1770	1863	1583	0	1796	0	1787	1710	0
Flt Permitted	0.950			0.950				0.978		0.950		
Satd. Flow (perm)	1770	1788	0	1770	1863	1583	0	1796	0	1787	1710	0
Link Speed (mph)		35			35			25			25	
Link Distance (ft)		551			1005			508			593	
Travel Time (s)		10.7			19.6			13.9			16.2	

Intersection Summary	
Area Type:	Other

Lane Group	EBL	EBT	EBR	WBL	WBT	WBR	NBL	NBT	NBR	SBL	SBT	SBR
Traffic Volume (vph)	55	275	100	35	310	80	50	40	20	55	35	55
Future Volume (vph)	55	275	100	35	310	80	50	40	20	55	35	55
Confl. Peds. (#/hr)												
Confl. Bikes (#/hr)						1			1			
Peak Hour Factor	0.82	0.82	0.82	0.82	0.82	0.82	0.82	0.82	0.82	0.82	0.82	0.82
Growth Factor	100%	100%	100%	100%	100%	100%	100%	100%	100%	100%	100%	100%
Heavy Vehicles (%)	2%	2%	2%	2%	2%	2%	1%	1%	1%	1%	1%	1%
Bus Blockages (#/hr)	0	0	0	0	0	0	0	0	0	0	0	0
Parking (#/hr)												
Mid-Block Traffic (%)		0%			0%			0%			0%	
Adj. Flow (vph)	67	335	122	43	378	98	61	49	24	67	43	67
Shared Lane Traffic (%)												
Lane Group Flow (vph)	67	457	0	43	378	98	0	134	0	67	110	0

Intersection Summary

Intersection	
Int Delay, s/veh	11.2

Movement	EBL	EBT	EBR	WBL	WBT	WBR	NBL	NBT	NBR	SBL	SBT	SBR
Lane Configurations												
Traffic Vol, veh/h	55	275	100	35	310	80	50	40	20	55	35	55
Future Vol, veh/h	55	275	100	35	310	80	50	40	20	55	35	55
Conflicting Peds, #/hr	0	0	0	0	0	0	0	0	0	0	0	0
Sign Control	Free	Free	Free	Free	Free	Free	Stop	Stop	Stop	Stop	Stop	Stop
RT Channelized	-	-	None	-	-	None	-	-	None	-	-	None
Storage Length	175	-	-	150	-	125	-	-	-	100	-	-
Veh in Median Storage, #	-	0	-	-	0	-	-	0	-	-	0	-
Grade, %	-	0	-	-	0	-	-	0	-	-	0	-
Peak Hour Factor	82	82	82	82	82	82	82	82	82	82	82	82
Heavy Vehicles, %	2	2	2	2	2	2	1	1	1	1	1	1
Mvmt Flow	67	335	122	43	378	98	61	49	24	67	43	67

Major/Minor	Major1			Major2			Minor1			Minor2		
Conflicting Flow All	476	0	0	457	0	0	1098	1092	396	1031	1055	378
Stage 1	-	-	-	-	-	-	530	530	-	464	464	-
Stage 2	-	-	-	-	-	-	568	562	-	567	591	-
Critical Hdwy	4.12	-	-	4.12	-	-	7.11	6.51	6.21	7.11	6.51	6.21
Critical Hdwy Stg 1	-	-	-	-	-	-	6.11	5.51	-	6.11	5.51	-
Critical Hdwy Stg 2	-	-	-	-	-	-	6.11	5.51	-	6.11	5.51	-
Follow-up Hdwy	2.218	-	-	2.218	-	-	3.509	4.009	3.309	3.509	4.009	3.309
Pot Cap-1 Maneuver	1086	-	-	1104	-	-	191	215	656	212	227	671
Stage 1	-	-	-	-	-	-	534	528	-	580	565	-
Stage 2	-	-	-	-	-	-	509	511	-	510	496	-
Platoon blocked, %		-	-		-	-						
Mov Cap-1 Maneuver	1086	-	-	1104	-	-	134	194	656	153	205	671
Mov Cap-2 Maneuver	-	-	-	-	-	-	134	194	-	153	205	-
Stage 1	-	-	-	-	-	-	501	495	-	544	543	-
Stage 2	-	-	-	-	-	-	406	491	-	415	465	-

Approach	EB	WB	NB	SB
HCM Control Delay, s	1.1	0.7	67.6	29.5
HCM LOS			F	D

Minor Lane/Major Mvmt	NBLn1	EBL	EBT	EBR	WBL	WBT	WBR	SBLn1	SBLn2
Capacity (veh/h)	180	1086	-	-	1104	-	-	153	356
HCM Lane V/C Ratio	0.745	0.062	-	-	0.039	-	-	0.438	0.308
HCM Control Delay (s)	67.6	8.5	-	-	8.4	-	-	45.7	19.6
HCM Lane LOS	F	A	-	-	A	-	-	E	C
HCM 95th %tile Q(veh)	4.8	0.2	-	-	0.1	-	-	2	1.3

Lane Group	EBL	EBT	EBR	WBL	WBT	WBR	NBL	NBT	NBR	SBL	SBT	SBR
Lane Configurations												
Ideal Flow (vphpl)	1900	1900	1900	1900	1900	1900	1900	1900	1900	1900	1900	1900
Lane Width (ft)	12	12	12	12	12	12	12	12	12	12	12	12
Grade (%)		0%			0%			0%			0%	
Storage Length (ft)	175		0	150		125	0		0	100		0
Storage Lanes	1		0	1		1	0		0	1		0
Taper Length (ft)	25			25			25			25		
Lane Util. Factor	1.00	1.00	1.00	1.00	1.00	1.00	1.00	1.00	1.00	1.00	1.00	1.00
Ped Bike Factor												
Frt		0.986				0.850		0.952			0.877	
Flt Protected	0.950			0.950				0.982		0.950		
Satd. Flow (prot)	1703	1767	0	1736	1827	1553	0	1660	0	1703	1572	0
Flt Permitted	0.950			0.950				0.982		0.950		
Satd. Flow (perm)	1703	1767	0	1736	1827	1553	0	1660	0	1703	1572	0
Link Speed (mph)		40			40			30			30	
Link Distance (ft)		551			1005			508			593	
Travel Time (s)		9.4			17.1			11.5			13.5	

Intersection Summary

Area Type: Other

Lane Group	EBL	EBT	EBR	WBL	WBT	WBR	NBL	NBT	NBR	SBL	SBT	SBR
Traffic Volume (vph)	75	350	35	15	235	90	25	20	25	85	15	70
Future Volume (vph)	75	350	35	15	235	90	25	20	25	85	15	70
Confl. Peds. (#/hr)			1	1								
Confl. Bikes (#/hr)												
Peak Hour Factor	0.84	0.84	0.84	0.84	0.84	0.84	0.84	0.84	0.84	0.84	0.84	0.84
Growth Factor	100%	100%	100%	100%	100%	100%	100%	100%	100%	100%	100%	100%
Heavy Vehicles (%)	6%	6%	6%	4%	4%	4%	7%	7%	7%	6%	6%	6%
Bus Blockages (#/hr)	0	0	0	0	0	0	0	0	0	0	0	0
Parking (#/hr)												
Mid-Block Traffic (%)		0%			0%			0%			0%	
Adj. Flow (vph)	89	417	42	18	280	107	30	24	30	101	18	83
Shared Lane Traffic (%)												
Lane Group Flow (vph)	89	459	0	18	280	107	0	84	0	101	101	0

Intersection Summary

Intersection	
Int Delay, s/veh	7.4

Movement	EBL	EBT	EBR	WBL	WBT	WBR	NBL	NBT	NBR	SBL	SBT	SBR
Lane Configurations												
Traffic Vol, veh/h	75	350	35	15	235	90	25	20	25	85	15	70
Future Vol, veh/h	75	350	35	15	235	90	25	20	25	85	15	70
Conflicting Peds, #/hr	0	0	1	1	0	0	0	0	0	0	0	0
Sign Control	Free	Free	Free	Free	Free	Free	Stop	Stop	Stop	Stop	Stop	Stop
RT Channelized	-	-	None	-	-	None	-	-	None	-	-	None
Storage Length	175	-	-	150	-	125	-	-	-	100	-	-
Veh in Median Storage, #	-	0	-	-	0	-	-	0	-	-	0	-
Grade, %	-	0	-	-	0	-	-	0	-	-	0	-
Peak Hour Factor	84	84	84	84	84	84	84	84	84	84	84	84
Heavy Vehicles, %	6	6	6	4	4	4	7	7	7	6	6	6
Mvmt Flow	89	417	42	18	280	107	30	24	30	101	18	83

Major/Minor	Major1			Major2			Minor1			Minor2		
Conflicting Flow All	387	0	0	460	0	0	1037	1040	439	959	954	280
Stage 1	-	-	-	-	-	-	617	617	-	316	316	-
Stage 2	-	-	-	-	-	-	420	423	-	643	638	-
Critical Hdwy	4.16	-	-	4.14	-	-	7.17	6.57	6.27	7.16	6.56	6.26
Critical Hdwy Stg 1	-	-	-	-	-	-	6.17	5.57	-	6.16	5.56	-
Critical Hdwy Stg 2	-	-	-	-	-	-	6.17	5.57	-	6.16	5.56	-
Follow-up Hdwy	2.254	-	-	2.236	-	-	3.563	4.063	3.363	3.554	4.054	3.354
Pot Cap-1 Maneuver	1150	-	-	1091	-	-	205	226	607	233	255	749
Stage 1	-	-	-	-	-	-	469	474	-	687	648	-
Stage 2	-	-	-	-	-	-	601	579	-	455	465	-
Platoon blocked, %		-	-		-	-						
Mov Cap-1 Maneuver	1150	-	-	1090	-	-	159	205	606	188	231	749
Mov Cap-2 Maneuver	-	-	-	-	-	-	159	205	-	188	231	-
Stage 1	-	-	-	-	-	-	432	437	-	634	637	-
Stage 2	-	-	-	-	-	-	511	569	-	377	429	-

Approach	EB	WB	NB	SB
HCM Control Delay, s	1.4	0.4	28.4	28.9
HCM LOS			D	D

Minor Lane/Major Mvmt	NBLn1	EBL	EBT	EBR	WBL	WBT	WBR	SBLn1	SBLn2
Capacity (veh/h)	236	1150	-	-	1090	-	-	188	537
HCM Lane V/C Ratio	0.353	0.078	-	-	0.016	-	-	0.538	0.188
HCM Control Delay (s)	28.4	8.4	-	-	8.4	-	-	44.5	13.3
HCM Lane LOS	D	A	-	-	A	-	-	E	B
HCM 95th %tile Q(veh)	1.5	0.3	-	-	0.1	-	-	2.8	0.7

Lane Group	EBL	EBT	EBR	WBL	WBT	WBR	NBL	NBT	NBR	SBL	SBT	SBR
Lane Configurations												
Ideal Flow (vphpl)	1900	1900	1900	1900	1900	1900	1900	1900	1900	1900	1900	1900
Lane Width (ft)	12	12	12	12	12	12	12	12	12	12	12	12
Grade (%)		0%			0%			0%			0%	
Storage Length (ft)	175		0	150		125	0		0	100		0
Storage Lanes	1		0	1		1	0		0	1		0
Taper Length (ft)	25			25			25			25		
Lane Util. Factor	1.00	1.00	1.00	1.00	1.00	1.00	1.00	1.00	1.00	1.00	1.00	1.00
Ped Bike Factor												
Frt		0.959				0.850		0.977			0.909	
Flt Protected	0.950			0.950				0.979		0.950		
Satd. Flow (prot)	1770	1786	0	1770	1863	1583	0	1799	0	1787	1710	0
Flt Permitted	0.950			0.950				0.979		0.950		
Satd. Flow (perm)	1770	1786	0	1770	1863	1583	0	1799	0	1787	1710	0
Link Speed (mph)		40			40			30			30	
Link Distance (ft)		551			1005			508			593	
Travel Time (s)		9.4			17.1			11.5			13.5	

Intersection Summary

Area Type: Other

Lane Group	EBL	EBT	EBR	WBL	WBT	WBR	NBL	NBT	NBR	SBL	SBT	SBR
Traffic Volume (vph)	55	280	105	35	315	85	50	45	20	60	35	55
Future Volume (vph)	55	280	105	35	315	85	50	45	20	60	35	55
Confl. Peds. (#/hr)												
Confl. Bikes (#/hr)						1			1			
Peak Hour Factor	0.82	0.82	0.82	0.82	0.82	0.82	0.82	0.82	0.82	0.82	0.82	0.82
Growth Factor	100%	100%	100%	100%	100%	100%	100%	100%	100%	100%	100%	100%
Heavy Vehicles (%)	2%	2%	2%	2%	2%	2%	1%	1%	1%	1%	1%	1%
Bus Blockages (#/hr)	0	0	0	0	0	0	0	0	0	0	0	0
Parking (#/hr)												
Mid-Block Traffic (%)		0%			0%			0%			0%	
Adj. Flow (vph)	67	341	128	43	384	104	61	55	24	73	43	67
Shared Lane Traffic (%)												
Lane Group Flow (vph)	67	469	0	43	384	104	0	140	0	73	110	0

Intersection Summary

Intersection	
Int Delay, s/veh	13

Movement	EBL	EBT	EBR	WBL	WBT	WBR	NBL	NBT	NBR	SBL	SBT	SBR
Lane Configurations												
Traffic Vol, veh/h	55	280	105	35	315	85	50	45	20	60	35	55
Future Vol, veh/h	55	280	105	35	315	85	50	45	20	60	35	55
Conflicting Peds, #/hr	0	0	0	0	0	0	0	0	0	0	0	0
Sign Control	Free	Free	Free	Free	Free	Free	Stop	Stop	Stop	Stop	Stop	Stop
RT Channelized	-	-	None	-	-	None	-	-	None	-	-	None
Storage Length	175	-	-	150	-	125	-	-	-	100	-	-
Veh in Median Storage, #	-	0	-	-	0	-	-	0	-	-	0	-
Grade, %	-	0	-	-	0	-	-	0	-	-	0	-
Peak Hour Factor	82	82	82	82	82	82	82	82	82	82	82	82
Heavy Vehicles, %	2	2	2	2	2	2	1	1	1	1	1	1
Mvmt Flow	67	341	128	43	384	104	61	55	24	73	43	67

Major/Minor	Major1			Major2			Minor1			Minor2		
Conflicting Flow All	488	0	0	469	0	0	1116	1113	405	1049	1073	384
Stage 1	-	-	-	-	-	-	539	539	-	470	470	-
Stage 2	-	-	-	-	-	-	577	574	-	579	603	-
Critical Hdwy	4.12	-	-	4.12	-	-	7.11	6.51	6.21	7.11	6.51	6.21
Critical Hdwy Stg 1	-	-	-	-	-	-	6.11	5.51	-	6.11	5.51	-
Critical Hdwy Stg 2	-	-	-	-	-	-	6.11	5.51	-	6.11	5.51	-
Follow-up Hdwy	2.218	-	-	2.218	-	-	3.509	4.009	3.309	3.509	4.009	3.309
Pot Cap-1 Maneuver	1075	-	-	1093	-	-	186	209	648	206	221	666
Stage 1	-	-	-	-	-	-	528	523	-	576	562	-
Stage 2	-	-	-	-	-	-	504	505	-	503	490	-
Platoon blocked, %		-	-		-	-						
Mov Cap-1 Maneuver	1075	-	-	1093	-	-	129	188	648	142	199	666
Mov Cap-2 Maneuver	-	-	-	-	-	-	129	188	-	142	199	-
Stage 1	-	-	-	-	-	-	495	491	-	540	540	-
Stage 2	-	-	-	-	-	-	401	485	-	403	460	-

Approach	EB	WB	NB	SB
HCM Control Delay, s	1.1	0.7	77.9	33.8
HCM LOS			F	D

Minor Lane/Major Mvmt	NBLn1	EBL	EBT	EBR	WBL	WBT	WBR	SBLn1	SBLn2
Capacity (veh/h)	175	1075	-	-	1093	-	-	142	348
HCM Lane V/C Ratio	0.801	0.062	-	-	0.039	-	-	0.515	0.315
HCM Control Delay (s)	77.9	8.6	-	-	8.4	-	-	54.6	20
HCM Lane LOS	F	A	-	-	A	-	-	F	C
HCM 95th %tile Q(veh)	5.4	0.2	-	-	0.1	-	-	2.5	1.3

Lane Group	EBL	EBT	EBR	WBL	WBT	WBR	NBL	NBT	NBR	SBL	SBT	SBR
Lane Configurations												
Traffic Volume (vph)	75	390	40	30	280	90	30	25	40	85	15	75
Future Volume (vph)	75	390	40	30	280	90	30	25	40	85	15	75
Ideal Flow (vphpl)	1900	1791	1900	1900	1830	1900	1900	1750	1900	1900	1750	1900
Storage Length (ft)	200		0	200		200	125		0	125		0
Storage Lanes	1		0	1		1	1		0	1		0
Taper Length (ft)	100			150			100			100		
Right Turn on Red			No			No			No			No
Link Speed (mph)		35			35			25			25	
Link Distance (ft)		551			1005			508			593	
Travel Time (s)		10.7			19.6			13.9			16.2	
Confl. Peds. (#/hr)			1	1								
Peak Hour Factor	0.84	0.84	0.84	0.84	0.84	0.84	0.84	0.84	0.84	0.84	0.84	0.84
Growth Factor	100%	100%	100%	100%	100%	62%	100%	100%	100%	100%	100%	100%
Heavy Vehicles (%)	6%	6%	6%	4%	4%	4%	7%	7%	7%	6%	6%	6%
Shared Lane Traffic (%)												
Lane Group Flow (vph)	89	512	0	36	333	66	36	78	0	101	107	0
Turn Type	Perm	NA		Perm	NA	Perm	Perm	NA		Perm	NA	
Protected Phases		4			8			2			6	
Permitted Phases	4			8		8	2			6		
Detector Phase	4	4		8	8	8	2	2		6	6	
Switch Phase												
Minimum Initial (s)	5.0	5.0		5.0	5.0	5.0	5.0	5.0		5.0	5.0	
Minimum Split (s)	27.5	27.5		27.5	27.5	27.5	29.5	29.5		29.5	29.5	
Total Split (s)	30.0	30.0		30.0	30.0	30.0	30.0	30.0		30.0	30.0	
Total Split (%)	50.0%	50.0%		50.0%	50.0%	50.0%	50.0%	50.0%		50.0%	50.0%	
Maximum Green (s)	24.0	24.0		24.0	24.0	24.0	24.0	24.0		24.0	24.0	
Yellow Time (s)	4.0	4.0		4.0	4.0	4.0	3.5	3.5		3.5	3.5	
All-Red Time (s)	2.0	2.0		2.0	2.0	2.0	2.5	2.5		2.5	2.5	
Lost Time Adjust (s)	0.0	0.0		0.0	0.0	0.0	0.0	0.0		0.0	0.0	
Total Lost Time (s)	6.0	6.0		6.0	6.0	6.0	6.0	6.0		6.0	6.0	
Lead/Lag												
Lead-Lag Optimize?												
Vehicle Extension (s)	3.0	3.0		3.0	3.0	3.0	3.0	3.0		3.0	3.0	
Recall Mode	Min	Min		Min	Min	Min	None	None		None	None	
Walk Time (s)	7.0	7.0		7.0	7.0	7.0	7.0	7.0		7.0	7.0	
Flash Dont Walk (s)	14.0	14.0		14.0	14.0	14.0	16.0	16.0		16.0	16.0	
Pedestrian Calls (#/hr)	0	0		0	0	0	0	0		0	0	
v/c Ratio	0.15	0.53		0.08	0.33	0.07	0.13	0.23		0.36	0.33	
Control Delay	7.4	10.5		6.9	8.0	6.5	14.8	15.6		18.0	17.1	
Queue Delay	0.0	0.0		0.0	0.0	0.0	0.0	0.0		0.0	0.0	
Total Delay	7.4	10.5		6.9	8.0	6.5	14.8	15.6		18.0	17.1	
Queue Length 50th (ft)	10	76		4	42	7	6	14		18	19	
Queue Length 95th (ft)	30	157		15	90	22	23	40		51	52	
Internal Link Dist (ft)		471			925			428			513	
Turn Bay Length (ft)	200			200		200	125			125		
Base Capacity (vph)	638	1057		507	1119	987	777	944		804	918	
Starvation Cap Reductn	0	0		0	0	0	0	0		0	0	
Spillback Cap Reductn	0	0		0	0	0	0	0		0	0	

Lane Group	EBL	EBT	EBR	WBL	WBT	WBR	NBL	NBT	NBR	SBL	SBT	SBR
Storage Cap Reductn	0	0		0	0	0	0	0		0	0	
Reduced v/c Ratio	0.14	0.48		0.07	0.30	0.07	0.05	0.08		0.13	0.12	

Intersection Summary

Area Type: Other
Cycle Length: 60
Actuated Cycle Length: 39.1
Natural Cycle: 60
Control Type: Actuated-Uncoordinated

Splits and Phases: 6: Eagle Dr & WIS 60

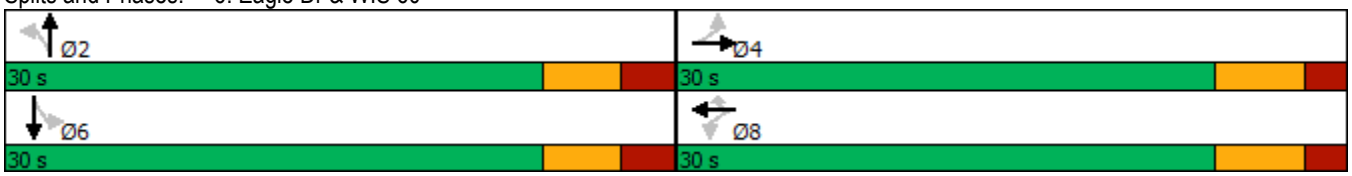

Movement	EBL	EBT	EBR	WBL	WBT	WBR	NBL	NBT	NBR	SBL	SBT	SBR
Lane Configurations												
Traffic Volume (veh/h)	75	390	40	30	280	90	30	25	40	85	15	75
Future Volume (veh/h)	75	390	40	30	280	90	30	25	40	85	15	75
Initial Q (Qb), veh	0	0	0	0	0	0	0	0	0	0	0	0
Ped-Bike Adj(A_pbT)	1.00		1.00	1.00		1.00	1.00		1.00	1.00		1.00
Parking Bus, Adj	1.00	1.00	1.00	1.00	1.00	1.00	1.00	1.00	1.00	1.00	1.00	1.00
Work Zone On Approach		No			No			No			No	
Adj Sat Flow, veh/h/ln	1811	1707	1811	1841	1773	1841	1796	1654	1796	1811	1668	1811
Adj Flow Rate, veh/h	89	464	48	36	333	66	36	30	48	101	18	89
Peak Hour Factor	0.84	0.84	0.84	0.84	0.84	0.84	0.84	0.84	0.84	0.84	0.84	0.84
Percent Heavy Veh, %	6	6	6	4	4	4	7	7	7	6	6	6
Cap, veh/h	503	640	66	375	746	656	393	113	180	424	48	237
Arrive On Green	0.42	0.42	0.42	0.42	0.42	0.42	0.20	0.20	0.20	0.20	0.20	0.20
Sat Flow, veh/h	954	1521	157	874	1773	1558	1236	573	917	1279	244	1207
Grp Volume(v), veh/h	89	0	512	36	333	66	36	0	78	101	0	107
Grp Sat Flow(s),veh/h/ln	954	0	1679	874	1773	1558	1236	0	1489	1279	0	1451
Q Serve(g_s), s	2.3	0.0	8.0	1.1	4.2	0.8	0.8	0.0	1.4	2.3	0.0	2.0
Cycle Q Clear(g_c), s	6.5	0.0	8.0	9.1	4.2	0.8	2.8	0.0	1.4	3.7	0.0	2.0
Prop In Lane	1.00		0.09	1.00		1.00	1.00		0.62	1.00		0.83
Lane Grp Cap(c), veh/h	503	0	707	375	746	656	393	0	293	424	0	285
V/C Ratio(X)	0.18	0.00	0.72	0.10	0.45	0.10	0.09	0.00	0.27	0.24	0.00	0.38
Avail Cap(c_a), veh/h	832	0	1285	676	1357	1192	1096	0	1140	1152	0	1110
HCM Platoon Ratio	1.00	1.00	1.00	1.00	1.00	1.00	1.00	1.00	1.00	1.00	1.00	1.00
Upstream Filter(I)	1.00	0.00	1.00	1.00	1.00	1.00	1.00	0.00	1.00	1.00	0.00	1.00
Uniform Delay (d), s/veh	8.8	0.0	7.6	11.4	6.5	5.5	12.2	0.0	10.7	12.2	0.0	10.9
Incr Delay (d2), s/veh	0.2	0.0	1.4	0.1	0.4	0.1	0.1	0.0	0.5	0.3	0.0	0.8
Initial Q Delay(d3),s/veh	0.0	0.0	0.0	0.0	0.0	0.0	0.0	0.0	0.0	0.0	0.0	0.0
%ile BackOfQ(95%),veh/ln	0.6	0.0	3.1	0.3	1.6	0.3	0.3	0.0	0.7	1.0	0.0	1.0
Unsig. Movement Delay, s/veh												
LnGrp Delay(d),s/veh	9.0	0.0	9.0	11.5	6.9	5.6	12.3	0.0	11.2	12.5	0.0	11.8
LnGrp LOS	A	A	A	B	A	A	B	A	B	B	A	B
Approach Vol, veh/h		601			435			114			208	
Approach Delay, s/veh		9.0			7.1			11.5			12.1	
Approach LOS		A			A			B			B	

Timer - Assigned Phs		2		4		6		8				
Phs Duration (G+Y+Rc), s		12.2		19.2		12.2		19.2				
Change Period (Y+Rc), s		6.0		6.0		6.0		6.0				
Max Green Setting (Gmax), s		24.0		24.0		24.0		24.0				
Max Q Clear Time (g_c+I1), s		4.8		10.0		5.7		11.1				
Green Ext Time (p_c), s		0.5		3.2		0.9		1.9				

Intersection Summary	
HCM 6th Ctrl Delay	9.1
HCM 6th LOS	A

Lane Group	EBL	EBT	EBR	WBL	WBT	WBR	NBL	NBT	NBR	SBL	SBT	SBR
Lane Configurations												
Traffic Volume (vph)	60	335	130	65	355	85	75	45	40	60	40	55
Future Volume (vph)	60	335	130	65	355	85	75	45	40	60	40	55
Ideal Flow (vphpl)	1900	1791	1900	1900	1830	1900	1900	1750	1900	1900	1750	1900
Storage Length (ft)	200		0	200		200	125		0	125		0
Storage Lanes	1		0	1		1	1		0	1		0
Taper Length (ft)	100			150			100			100		
Right Turn on Red			No			No			No			No
Link Speed (mph)		35			35			25			25	
Link Distance (ft)		551			1005			508			593	
Travel Time (s)		10.7			19.6			13.9			16.2	
Confl. Bikes (#/hr)						1			1			
Peak Hour Factor	0.82	0.82	0.82	0.82	0.82	0.82	0.82	0.82	0.82	0.82	0.82	0.82
Growth Factor	100%	100%	100%	100%	100%	62%	100%	100%	100%	100%	100%	100%
Heavy Vehicles (%)	2%	2%	2%	2%	2%	2%	1%	1%	1%	1%	1%	1%
Shared Lane Traffic (%)												
Lane Group Flow (vph)	73	568	0	79	433	64	91	104	0	73	116	0
Turn Type	Perm	NA		Perm	NA	Perm	Perm	NA		Perm	NA	
Protected Phases		4			8			2			6	
Permitted Phases	4			8		8	2			6		
Detector Phase	4	4		8	8	8	2	2		6	6	
Switch Phase												
Minimum Initial (s)	5.0	5.0		5.0	5.0	5.0	5.0	5.0		5.0	5.0	
Minimum Split (s)	27.5	27.5		27.5	27.5	27.5	29.5	29.5		29.5	29.5	
Total Split (s)	30.0	30.0		30.0	30.0	30.0	30.0	30.0		30.0	30.0	
Total Split (%)	50.0%	50.0%		50.0%	50.0%	50.0%	50.0%	50.0%		50.0%	50.0%	
Maximum Green (s)	23.5	23.5		23.5	23.5	23.5	23.5	23.5		23.5	23.5	
Yellow Time (s)	4.0	4.0		4.0	4.0	4.0	3.5	3.5		3.5	3.5	
All-Red Time (s)	2.5	2.5		2.5	2.5	2.5	3.0	3.0		3.0	3.0	
Lost Time Adjust (s)	0.0	0.0		0.0	0.0	0.0	0.0	0.0		0.0	0.0	
Total Lost Time (s)	6.5	6.5		6.5	6.5	6.5	6.5	6.5		6.5	6.5	
Lead/Lag												
Lead-Lag Optimize?												
Vehicle Extension (s)	3.0	3.0		3.0	3.0	3.0	3.0	3.0		3.0	3.0	
Recall Mode	Min	Min		Min	Min	Min	None	None		None	None	
Walk Time (s)	7.0	7.0		7.0	7.0	7.0	7.0	7.0		7.0	7.0	
Flash Dont Walk (s)	14.0	14.0		14.0	14.0	14.0	16.0	16.0		16.0	16.0	
Pedestrian Calls (#/hr)	0	0		0	0	0	0	0		0	0	
v/c Ratio	0.13	0.57		0.18	0.41	0.07	0.35	0.32		0.27	0.36	
Control Delay	7.3	11.5		8.2	8.8	6.6	19.2	17.9		17.8	18.5	
Queue Delay	0.0	0.0		0.0	0.0	0.0	0.0	0.0		0.0	0.0	
Total Delay	7.3	11.5		8.2	8.8	6.6	19.2	17.9		17.8	18.5	
Queue Length 50th (ft)	8	93		10	62	7	19	22		15	25	
Queue Length 95th (ft)	25	176		29	119	21	46	49		38	54	
Internal Link Dist (ft)		471			925			428			513	
Turn Bay Length (ft)	200			200		200	125			125		
Base Capacity (vph)	600	1060		465	1131	977	742	922		751	915	
Starvation Cap Reductn	0	0		0	0	0	0	0		0	0	
Spillback Cap Reductn	0	0		0	0	0	0	0		0	0	

Lane Group	EBL	EBT	EBR	WBL	WBT	WBR	NBL	NBT	NBR	SBL	SBT	SBR
Storage Cap Reductn	0	0		0	0	0	0	0		0	0	
Reduced v/c Ratio	0.12	0.54		0.17	0.38	0.07	0.12	0.11		0.10	0.13	

Intersection Summary

Area Type: Other
Cycle Length: 60
Actuated Cycle Length: 41.6
Natural Cycle: 60
Control Type: Actuated-Uncoordinated

Splits and Phases: 6: Eagle Dr & WIS 60

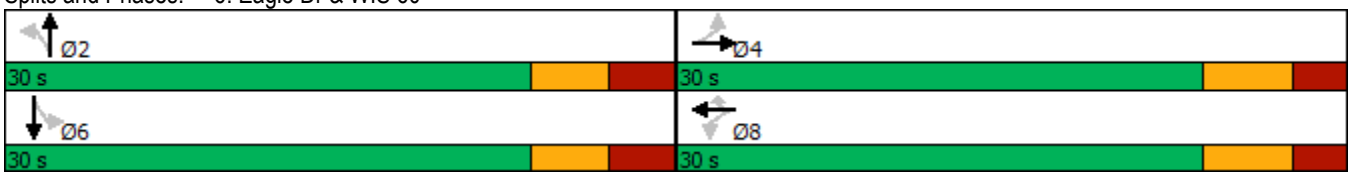

Movement	EBL	EBT	EBR	WBL	WBT	WBR	NBL	NBT	NBR	SBL	SBT	SBR
Lane Configurations												
Traffic Volume (veh/h)	60	335	130	65	355	85	75	45	40	60	40	55
Future Volume (veh/h)	60	335	130	65	355	85	75	45	40	60	40	55
Initial Q (Qb), veh	0	0	0	0	0	0	0	0	0	0	0	0
Ped-Bike Adj(A_pbT)	1.00		1.00	1.00		0.98	1.00		0.98	1.00		1.00
Parking Bus, Adj	1.00	1.00	1.00	1.00	1.00	1.00	1.00	1.00	1.00	1.00	1.00	1.00
Work Zone On Approach		No			No			No			No	
Adj Sat Flow, veh/h/ln	1870	1763	1870	1870	1801	1870	1885	1736	1885	1885	1736	1885
Adj Flow Rate, veh/h	73	409	159	79	433	64	91	55	49	73	49	67
Peak Hour Factor	0.82	0.82	0.82	0.82	0.82	0.82	0.82	0.82	0.82	0.82	0.82	0.82
Percent Heavy Veh, %	2	2	2	2	2	2	1	1	1	1	1	1
Cap, veh/h	452	560	218	347	835	719	360	166	148	372	132	180
Arrive On Green	0.46	0.46	0.46	0.46	0.46	0.46	0.20	0.20	0.20	0.20	0.20	0.20
Sat Flow, veh/h	901	1209	470	843	1801	1552	1286	837	746	1300	664	908
Grp Volume(v), veh/h	73	0	568	79	433	64	91	0	104	73	0	116
Grp Sat Flow(s),veh/h/ln	901	0	1678	843	1801	1552	1286	0	1582	1300	0	1573
Q Serve(g_s), s	2.4	0.0	10.5	3.2	6.5	0.9	2.5	0.0	2.2	2.0	0.0	2.5
Cycle Q Clear(g_c), s	8.9	0.0	10.5	13.8	6.5	0.9	5.0	0.0	2.2	4.1	0.0	2.5
Prop In Lane	1.00		0.28	1.00		1.00	1.00		0.47	1.00		0.58
Lane Grp Cap(c), veh/h	452	0	778	347	835	719	360	0	314	372	0	312
V/C Ratio(X)	0.16	0.00	0.73	0.23	0.52	0.09	0.25	0.00	0.33	0.20	0.00	0.37
Avail Cap(c_a), veh/h	585	0	1027	472	1102	949	892	0	968	910	0	962
HCM Platoon Ratio	1.00	1.00	1.00	1.00	1.00	1.00	1.00	1.00	1.00	1.00	1.00	1.00
Upstream Filter(I)	1.00	0.00	1.00	1.00	1.00	1.00	1.00	0.00	1.00	1.00	0.00	1.00
Uniform Delay (d), s/veh	10.4	0.0	8.4	13.9	7.3	5.8	15.5	0.0	13.2	15.0	0.0	13.3
Incr Delay (d2), s/veh	0.2	0.0	1.9	0.3	0.5	0.1	0.4	0.0	0.6	0.3	0.0	0.7
Initial Q Delay(d3),s/veh	0.0	0.0	0.0	0.0	0.0	0.0	0.0	0.0	0.0	0.0	0.0	0.0
%ile BackOfQ(95%),veh/ln	0.7	0.0	4.8	0.9	2.9	0.3	1.2	0.0	1.3	0.9	0.0	1.4
Unsig. Movement Delay, s/veh												
LnGrp Delay(d),s/veh	10.6	0.0	10.2	14.3	7.8	5.8	15.8	0.0	13.8	15.2	0.0	14.1
LnGrp LOS	B	A	B	B	A	A	B	A	B	B	A	B
Approach Vol, veh/h		641			576			195			189	
Approach Delay, s/veh		10.3			8.5			14.8			14.5	
Approach LOS		B			A			B			B	

Timer - Assigned Phs		2		4		6		8				
Phs Duration (G+Y+Rc), s		14.1		24.3		14.1		24.3				
Change Period (Y+Rc), s		6.5		6.5		6.5		6.5				
Max Green Setting (Gmax), s		23.5		23.5		23.5		23.5				
Max Q Clear Time (g_c+I1), s		7.0		12.5		6.1		15.8				
Green Ext Time (p_c), s		0.8		3.1		0.8		2.0				

Intersection Summary												
HCM 6th Ctrl Delay			10.7									
HCM 6th LOS			B									

HCS7 Roundabouts Report

General Information

Analyst	Matt Flanagan
Agency or Co.	SRF Consulting
Date Performed	11/12/2021
Analysis Year	2035
Time Analyzed	AM Peak
Project Description	Phase II ICE

Site Information

Intersection	WIS 60 & Eagle Drive
E/W Street Name	WIS 60
N/S Street Name	Eagle Drive
Analysis Time Period (hrs)	0.25
Peak Hour Factor	0.84
Jurisdiction	-

Volume Adjustments and Site Characteristics

Approach	EB				WB				NB				SB			
Movement	U	L	T	R	U	L	T	R	U	L	T	R	U	L	T	R
Number of Lanes (N)	0	0	1	0	0	0	1	0	0	0	1	0	0	0	1	0
Lane Assignment			LTR				LTR				LTR				LTR	
Volume (V), veh/h	0	75	390	40	0	30	280	90	0	30	25	40	0	85	15	75
Percent Heavy Vehicles, %	6	6	6	6	4	4	4	4	7	7	7	7	6	6	6	6
Flow Rate (v_{PCE}), pc/h	0	95	492	50	0	37	347	111	0	38	32	51	0	107	19	95
Right-Turn Bypass	None				None				None				None			
Conflicting Lanes	1				1				1				1			
Pedestrians Crossing, p/h	0				0				0				0			

Critical and Follow-Up Headway Adjustment

Approach	EB			WB			NB			SB		
Lane	Left	Right	Bypass	Left	Right	Bypass	Left	Right	Bypass	Left	Right	Bypass
Critical Headway (s)		4.7000			4.7000			4.7000			4.7000	
Follow-Up Headway (s)		2.6000			2.6000			2.6000			2.6000	

Flow Computations, Capacity and v/c Ratios

Approach	EB			WB			NB			SB		
Lane	Left	Right	Bypass	Left	Right	Bypass	Left	Right	Bypass	Left	Right	Bypass
Entry Flow (v_e), pc/h		637			495			121			221	
Entry Volume, veh/h		601			476			113			208	
Circulating Flow (v_c), pc/h	163			165			694			422		
Exiting Flow (v_{ex}), pc/h	650			480			238			106		
Capacity (c_{pce}), pc/h		1187			1185			719			929	
Capacity (c), veh/h		1120			1139			672			877	
v/c Ratio (x)		0.54			0.42			0.17			0.24	

Delay and Level of Service

Approach	EB			WB			NB			SB		
Lane	Left	Right	Bypass	Left	Right	Bypass	Left	Right	Bypass	Left	Right	Bypass
Lane Control Delay (d), s/veh		9.6			7.5			7.3			6.6	
Lane LOS		A			A			A			A	
95% Queue, veh		3.3			2.1			0.6			0.9	
Approach Delay, s/veh	9.6			7.5			7.3			6.6		
Approach LOS	A			A			A			A		
Intersection Delay, s/veh | LOS	8.2						A					

Copyright © 2022 University of Florida. All Rights Reserved.

HCS7 Roundabouts Report

General Information

Analyst	Matt Flanagan
Agency or Co.	SRF Consulting
Date Performed	11/12/2021
Analysis Year	2035
Time Analyzed	PM Peak
Project Description	Phase II ICE

Site Information

Intersection	WIS 60 & Eagle Drive
E/W Street Name	WIS 60
N/S Street Name	Eagle Drive
Analysis Time Period (hrs)	0.25
Peak Hour Factor	0.82
Jurisdiction	-

Volume Adjustments and Site Characteristics

Approach	EB				WB				NB				SB			
Movement	U	L	T	R	U	L	T	R	U	L	T	R	U	L	T	R
Number of Lanes (N)	0	0	1	0	0	0	1	0	0	0	1	0	0	0	1	0
Lane Assignment			LTR				LTR				LTR				LTR	
Volume (V), veh/h	0	60	335	130	0	65	355	85	0	75	45	40	0	60	40	55
Percent Heavy Vehicles, %	2	2	2	2	2	2	2	2	1	1	1	1	1	1	1	1
Flow Rate (v_{PCE}), pc/h	0	75	417	162	0	81	442	106	0	92	55	49	0	74	49	68
Right-Turn Bypass	None				None				None				None			
Conflicting Lanes	1				1				1				1			
Pedestrians Crossing, p/h	0				0				0				0			

Critical and Follow-Up Headway Adjustment

Approach	EB			WB			NB			SB		
Lane	Left	Right	Bypass	Left	Right	Bypass	Left	Right	Bypass	Left	Right	Bypass
Critical Headway (s)		4.7000			4.7000			4.7000			4.7000	
Follow-Up Headway (s)		2.6000			2.6000			2.6000			2.6000	

Flow Computations, Capacity and v/c Ratios

Approach	EB			WB			NB			SB		
Lane	Left	Right	Bypass	Left	Right	Bypass	Left	Right	Bypass	Left	Right	Bypass
Entry Flow (v_e), pc/h		654			629			196			191	
Entry Volume, veh/h		641			617			194			189	
Circulating Flow (v_c), pc/h	204			222			566			615		
Exiting Flow (v_{ex}), pc/h	540			602			236			292		
Capacity (c_{pce}), pc/h		1142			1123			811			775	
Capacity (c), veh/h		1120			1101			803			767	
v/c Ratio (x)		0.57			0.56			0.24			0.25	

Delay and Level of Service

Approach	EB			WB			NB			SB		
Lane	Left	Right	Bypass	Left	Right	Bypass	Left	Right	Bypass	Left	Right	Bypass
Lane Control Delay (d), s/veh		10.3			10.2			7.1			7.5	
Lane LOS		B			B			A			A	
95% Queue, veh		3.8			3.6			0.9			1.0	
Approach Delay, s/veh	10.3			10.2			7.1			7.5		
Approach LOS	B			B			A			A		
Intersection Delay, s/veh | LOS	9.5						A					

Copyright © 2022 University of Florida. All Rights Reserved.

Attachment 7 – Traffic Signal Warrant Analysis Worksheets

Wisconsin Department of Transportation Traffic Signal Warrant Summary Worksheet

70%

The Worksheet(s) attached are provided as an attachment to the Engineering Investigation Study for:

Intersection: WIS 60 and Eagle Drive
County: Washington
Village: Jackson

Major Street: WIS 60
Critical Approach Speed: 40 mph
Lanes: 1 lane

Minor Street: Eagle Drive
Critical Approach Speed: 30 mph
Lanes: 2 or more lanes

% Right Turns Included
From North (SB) 100%
From East (WB) 100%
From South (NB) 100%
From West (EB) 100%

In built-up area of isolated community of < 10,000 population? Yes
Total number of approaches at intersection? 4 or more
If it is a "T" intersection, inflate minor threshold to 150%?
Manually set volume level? No

Analysis based on EXISTING volume data.

Date	Day of the Week	Time (HH:MM)			
		From	AM / PM	To	AM / PM
2020	Wednesday	6	AM	9	AM
2020	Wednesday	3	PM	6	PM

Warrant Evaluation Summary	Warrant Met:
Warrant 1: Eight - Hour Vehicular Volume	**No**
Condition A: Minimum Vehicular Volume	No
Condition B: Interruption of Continuous Traffic	No
Condition C: Combination: 80% of A and B	No
Warrant 2: Four-Hour Volume	**Yes**
Warrant 3: Peak Hour Volume	**No**
Warrant 4: Pedestrian Volume	**N/A**
Criterion A: Four-Hour	
Criterion B: Peak-Hour	
Warrant 5: School Crossing	**N/A**
Warrant 6: Coordinated Signal System	**N/A**
Warrant 7: Crash Experience	**N/A**
Warrant 8: Roadway Network	**N/A**
Warrant 9: Intersection Near a Grade Crossing	**N/A**

Warrant Analysis Conducted By:
Name: Sandra Herbers
Agency: SRF Consulting
Date: 2/9/2022

Warrant 1: Eight - Hour Vehicular Volume 70%

Warrant Evaluated? Yes **Warrant Satisfied? No** **Manually Set To:**

Condition A : Min. Veh. Volume		
Volume Level	70%	56%
Major Rd. Req	350	280
Minor Rd. Req	140	112
Number of Hours	1	4

Satisfied? No

Condition B: Interruption of Continuous Traffic		
Volume Level	70%	56%
Major Rd. Req	525	420
Minor Rd. Req	70	56
Number of Hours	5	6

Satisfied? No

Condition C: Combination of A & B at 56%

Satisfied? No

6:00 AM Enter Start Time (Military Time) (HH:MM)

Time Period	**From**	**To**	**Major Road: Both App. (VPH)**	**Minor Road: High App. (VPH)**	**Total**
1	6:00	7:00	456	72	528
2	7:00	8:00	734	160	894
3	8:00	9:00	538	74	612
4	9:00	10:00	0	0	0
5	10:00	11:00	0	0	0
6	11:00	12:00	0	0	0
7	12:00	13:00	0	0	0
8	13:00	14:00	0	0	0
9	14:00	15:00	0	0	0
10	15:00	16:00	671	120	791
11	16:00	17:00	743	123	866
12	17:00	18:00	747	127	874
13	18:00	19:00	0	0	0
14	19:00	20:00	0	0	0
15	20:00	21:00	0	0	0
16	21:00	22:00	0	0	0

Warrant 2: Four-Hour Volume 70%

Warrant Evaluated? Yes
Warrant Satisfied? Yes
Manually Set To:

Hour Start	7:00	17:00	16:00	15:00
Major Road Vol.	734	747	743	671
Minor Road Vol.	160	127	123	120

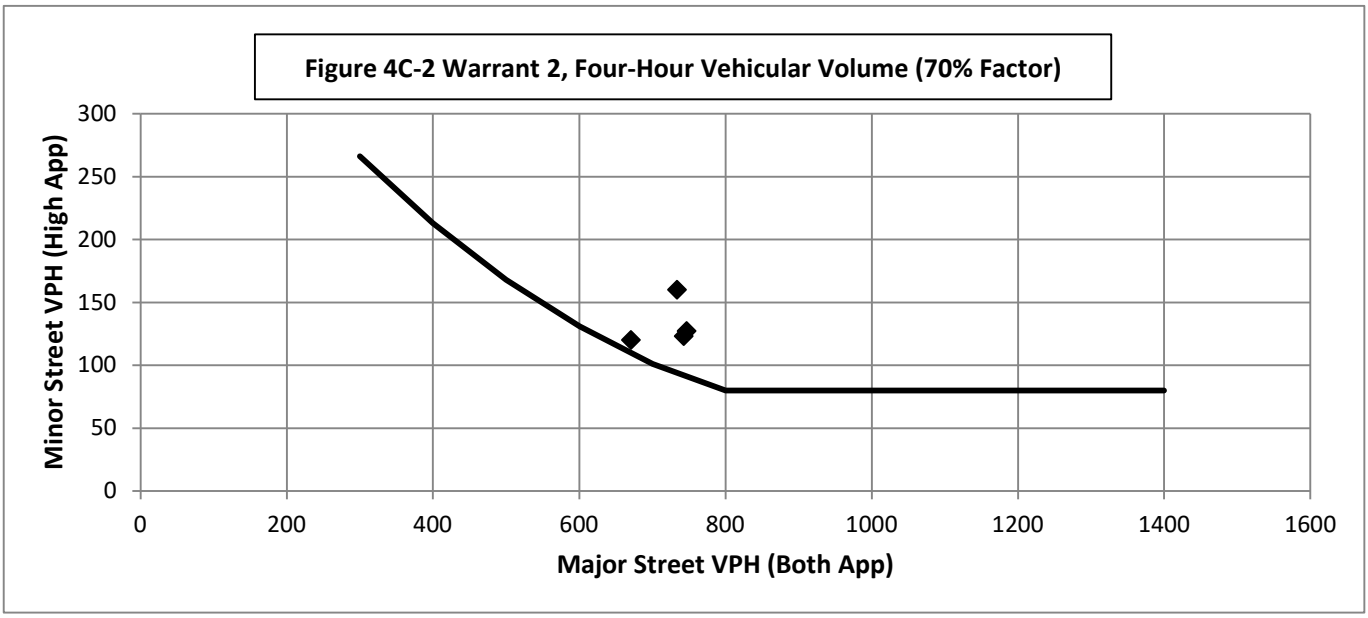

Warrant 3: Peak Hour Volume 70%

Warrant Evaluated? Yes **Warrant Satisfied? No** **Manually Set To:**

Condition justifying use of warrant:

Criteria		Met?
Delay on Minor Approach	5	Yes
Volume on Minor Approach	150	Yes
Total Entering Volume (veh/h)	800	

Manually Set Peak Hour? No

Peak Hour	Major Road Vol. (Both App.)	Minor Road Vol. (High App.)
7:00	734	160

Figure 4C-4 Warrant 3, Peak Hour (70% Factor)

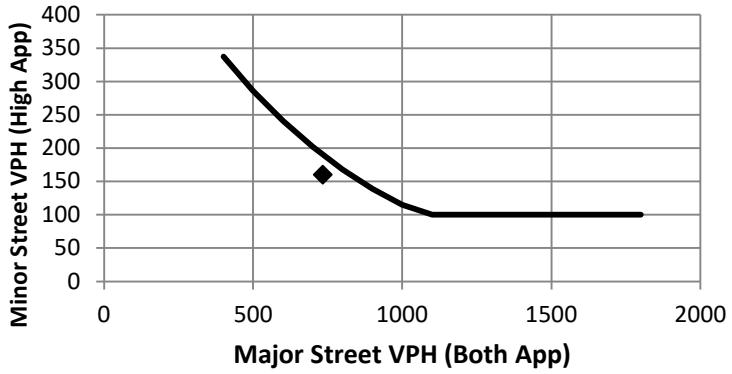

Warrant 4: Pedestrian Volume 70%

Warrant Evaluated? No **Warrant Satisfied? N/A** **Manually Set To:**

Criterion A: Four Hour

Hour (Start)	Pedestrian Volume	Major Road Vol.
		0
		0
		0
		0

Manually Set Major Rd Vol?

Avg. walk speed less than 3.5 ft/s?

Criterion A Satisfied?

Figure 4C-6 Warrant 4, Pedestrian Four-Hour Volume (70% Factor)

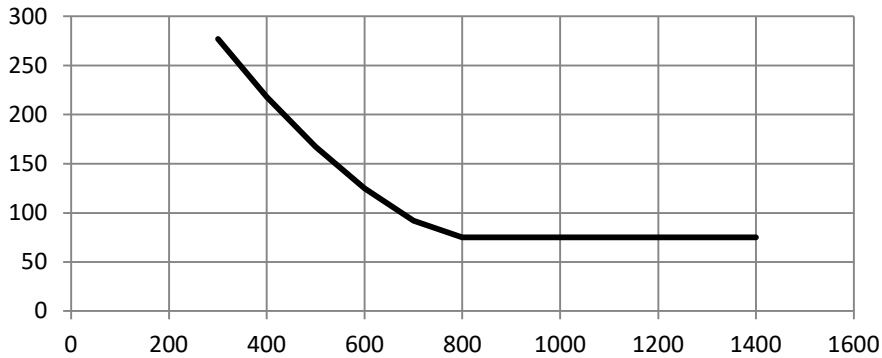

Criterion B: Peak Hour

Peak Hour	Pedestrian Vol.	Major Road Vol.
0:00	0	0

Criterion B Satisfied?

Figure 4C-8 Warrant 4, Pedestrian Peak Hour (70% Factor)

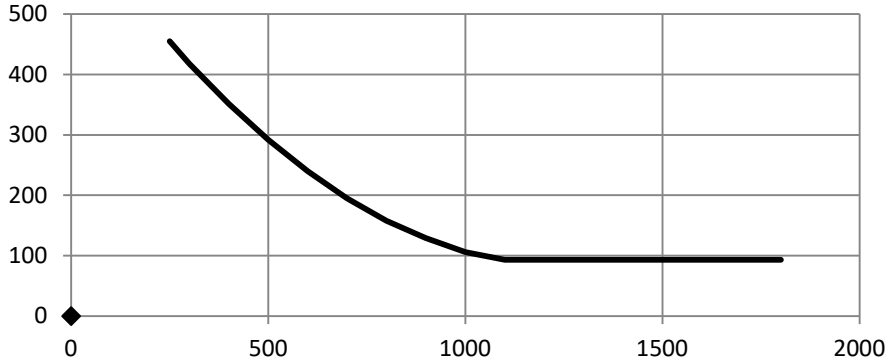

Warrant 5: School Crossing 70%

Warrant Evaluated? No **Warrant Satisfied? N/A** **Manually Set To:**

	Criteria	Fulfilled?
1	There are a MINIMUM of 20 school children during the highest crossing hour.	
2	There are fewer adequate gaps in the major road traffic stream during the period when the school children are using the crossing than the number of minutes in the same period.	
3	The nearest traffic signal along the major road is located more than 300 ft away. Or, the nearest traffic signal is within 300 ft but the proposed traffic signal will not restrict the progressive movement of traffic.	

Warrant 6: Coordinated Signal System 70%

Warrant Evaluated? No **Warrant Satisfied? N/A** **Manually Set To:**

	Criteria	Fulfilled?
1	Signal spacing > 1000 ft	
2	On a one-way road or a road that has traffic predominantly in one direction, the adjacent signals are so far apart that they do not provide the necessary degree of vehicle platooning.	
3	On a two-way road, adjacent signals do not provide the necessary degree of platooning and the proposed and the adjacent signals will collectively provide a progressive operation.	

Warrant 7: Crash Experience 70%

Warrant Evaluated? No **Warrant Satisfied? N/A** **Manually Set To:**

	Criteria		Met?	Fulfilled?
1	Adequate trial of other remedial measures has failed to reduce crash frequency.			
	Measures Tried:			
2	Five or more reported crashes, of types susceptible to correction by signal, have occurred within a 12 month period.	# of crashes per 12 months		
3	Warrant 1, Condition A (80%)		No	No
	Warrant 1, Condition B (80%)		No	
	Warrant 4, Criterion A (80%)		No	
	Warrant 4, Criterion B (80%)		No	

Warrant 8: Roadway Network 70%

Warrant Evaluated? No **Warrant Satisfied? N/A** **Manually Set To:**

	Criteria				Met?	Fulfilled?
1	Total entering volume of at least 1,000 veh/h during typical weekday peak hour			894	No	No
	Five-year projected volumes that satisfy one or more of Warrants 1, 2, or 3.				No	
2	Total entering vol. of at least 1,000 veh/h for each of any 5 hrs of non-normal business day (Sat. or Sun.)					
	Hour					
	Volume					

	Characteristics of Major Routes - Select yes if all intersecting routes have characteristic	Fulfilled?
1	Part of the road or highway system that serves as the principal roadway network for through traffic flow	
2	Rural or suburban highway outside of, entering, or traversing a city	
3	Appears as a major route on an official plan	

Warrant 9: Intersection Near a Grade Crossing 70%

Warrant Evaluated? **Warrant Satisfied? N/A** **Manually Set To:**

Adjustment Factors			Manually Set Peak Hour?				
Rail Traffic per Day	% High Occupancy Buses on Minor Road	% Tractor-Trailer Trucks on Minor Road	D	Peak Hour	Major Road Vol.	Minor Road Vol.	Adjusted Minor Vol.
1	0	0% to 2.5%	660	7:00	734	160	53.6

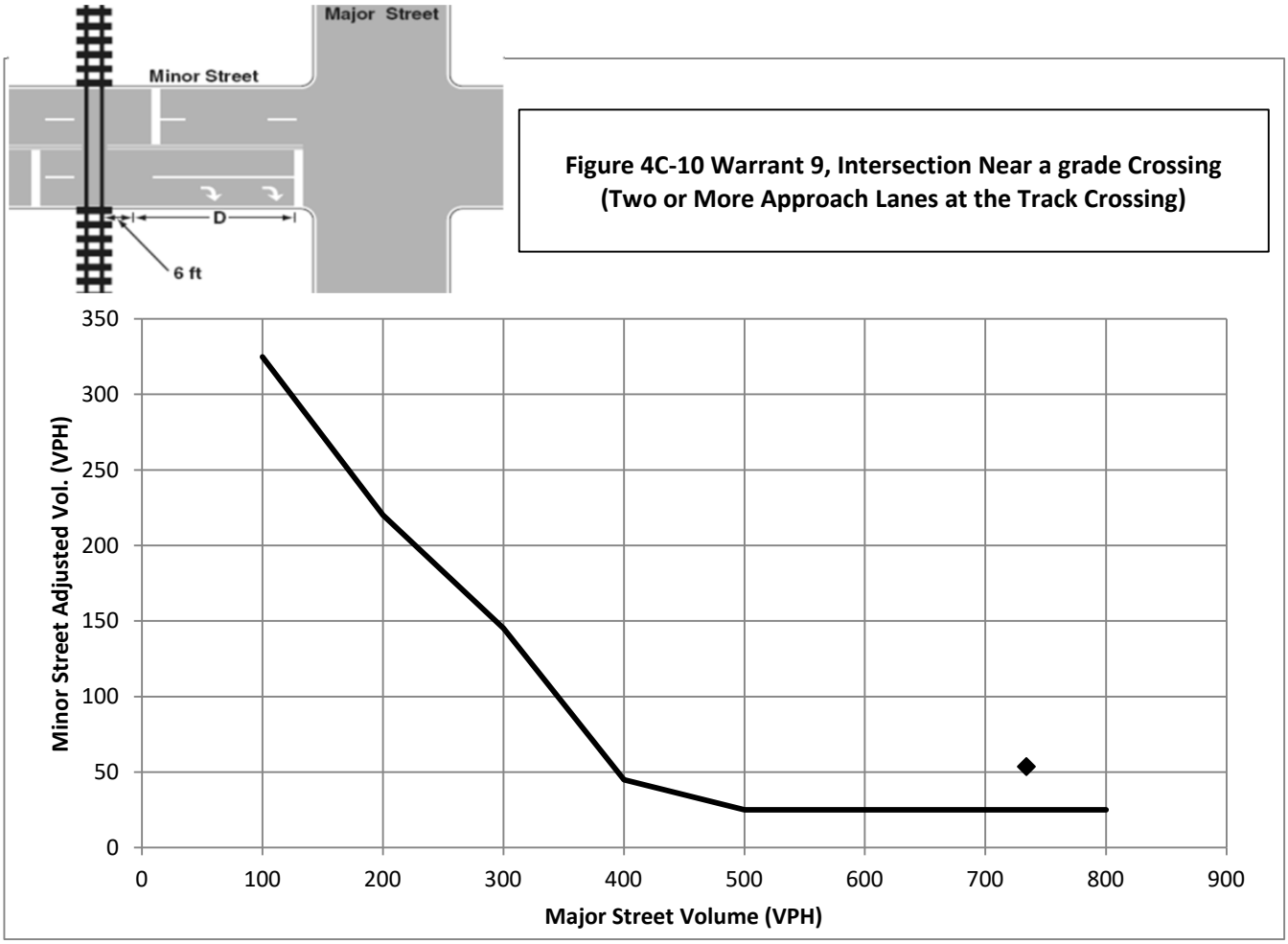

Conclusions/Comments:

Using Year 2040 projected volumes (0.5% growth/year) and rerouting traffic from Grand Avenue through Clough

Updated: 2/18/2016

Hourly Volume Data

One Hour Time Period Start Time		↓ From North (SB)					← From East (WB)					↑ From South (NB)					→ From West (EB)					Total Vehicle Volume
		Right	Thru	Left	U-Tn	Total	Right	Thru	Left	U-Tn	Total	Right	Thru	Left	U-Tn	Total	Right	Thru	Left	U-Tn	Total	
AM	6:00	24	13	35		72	23	138	7		168	9	16	17		42	27	230	31		288	570
	7:00	67	15	78		160	84	208	14		306	23	20	26		69	34	326	68		428	963
	8:00	32	15	27		74	35	204	7		246	16	21	27		64	46	222	24		292	676
	9:00	0	0	0		0	0	0	0		0	0	0	0		0	0	0	0		0	0
MD	10:00																				0	0
	11:00																				0	0
	12:00																				0	0
	13:00																				0	0
PM	14:00	0	0	0		0	0	0	0		0	0	0	0		0	0	0	0		0	0
	15:00	49	32	39		120	60	226	26		312	28	38	51		117	100	225	34		359	908
	16:00	42	39	42		123	70	267	23		360	14	41	52		107	76	257	50		383	973
	17:00	52	34	41		127	71	256	33		360	22	36	53		111	95	242	50		387	985
	18:00					0					0					0					0	0
	19:00					0					0					0					0	0
	20:00					0					0					0					0	0
	21:00					0					0					0					0	0
Totals		266	148	262	0	676	343	1299	110	0	1752	112	172	226	0	510	378	1502	257	0	2137	5075

Note: Copy volume data and paste into cells using paste special -> values

Note: U-Turns are counted as Left Turns in the Volume Totals

Please Select the Major Road: E/W

Major Road Left Turn as Minor Approach? No

% Right Turns Included (Default 0%)

From North (SB)	100%
From East (WB)	100%
From South (NB)	100%
From West (EB)	100%

Major Road Volume Totals: East/West				
Right	Thru	Left	T+LT	Total
50	368	38	406	456
118	534	82	616	734
81	426	31	457	538
0	0	0	0	0
0	0	0	0	0
0	0	0	0	0
0	0	0	0	0
0	0	0	0	0
0	0	0	0	0
160	451	60	511	671
146	524	73	597	743
166	498	83	581	747
0	0	0	0	0
0	0	0	0	0
0	0	0	0	0
0	0	0	0	0
721	2801	367	3168	3889

Minor Road Highest Volume: North/South				
Right	Thru	Left	T+LT	Total
24	13	35	48	72
67	15	78	93	160
32	15	27	42	74
0	0	0	0	0
0	0	0	0	0
0	0	0	0	0
0	0	0	0	0
0	0	0	0	0
49	32	39	71	120
42	39	42	81	123
52	34	41	75	127
0	0	0	0	0
0	0	0	0	0
0	0	0	0	0
0	0	0	0	0
266	148	262	410	676

Wisconsin Department of Transportation Traffic Signal Warrant Summary Worksheet

70%

The Worksheet(s) attached are provided as an attachment to the Engineering Investigation Study for:

Intersection: WIS 60 and Eagle Drive
County: Washington
Village: Jackson

Major Street: WIS 60
Critical Approach Speed: 40 mph
Lanes: 1 lane

Minor Street: Eagle Drive
Critical Approach Speed: 30 mph
Lanes: 2 or more lanes

% Right Turns Included
From North (SB) 100%
From East (WB) 100%
From South (NB) 100%
From West (EB) 100%

In built-up area of isolated community of < 10,000 population? Yes
Total number of approaches at intersection? 4 or more
If it is a "T" intersection, inflate minor threshold to 150%?
Manually set volume level? No

Analysis based on PROJECTED volume data.

Forecast Year	Within 5 Years of Construction?	Time (HH:MM)			
		From	AM / PM	To	AM / PM
2035	Yes	6	AM	9	AM
2035	Yes	3	PM	6	PM

Warrant Evaluation Summary	Warrant Met:
Warrant 1: Eight - Hour Vehicular Volume	**No**
Condition A: Minimum Vehicular Volume	No
Condition B: Interruption of Continuous Traffic	No
Condition C: Combination: 80% of A and B	No
Warrant 2: Four-Hour Volume	**Yes**
Warrant 3: Peak Hour Volume	**Yes**
Warrant 4: Pedestrian Volume	**N/A**
Criterion A: Four-Hour	
Criterion B: Peak-Hour	
Warrant 5: School Crossing	**N/A**
Warrant 6: Coordinated Signal System	**N/A**
Warrant 7: Crash Experience	**N/A**
Warrant 8: Roadway Network	**N/A**
Warrant 9: Intersection Near a Grade Crossing	**N/A**

Warrant Analysis Conducted By:
Name: Sandra Herbers
Agency: SRF Consulting
Date: 2/9/2022

Warrant 1: Eight - Hour Vehicular Volume 70%

Warrant Evaluated? Yes **Warrant Satisfied? No** **Manually Set To:**

Condition A : Min. Veh. Volume		
Volume Level	70%	56%
Major Rd. Req	350	280
Minor Rd. Req	140	112
Number of Hours	4	4

Satisfied? No

Condition B: Interruption of Continuous Traffic		
Volume Level	70%	56%
Major Rd. Req	525	420
Minor Rd. Req	70	56
Number of Hours	5	6

Satisfied? No

Condition C: Combination of A & B at 56%

Satisfied? No

6:00 AM Enter Start Time (Military Time) (HH:MM)

Time Period	**From**	**To**	**Major Road: Both App. (VPH)**	**Minor Road: High App. (VPH)**	**Total**
1	6:00	7:00	500	80	580
2	7:00	8:00	800	170	970
3	8:00	9:00	590	75	665
4	9:00	10:00	0	0	0
5	10:00	11:00	0	0	0
6	11:00	12:00	0	0	0
7	12:00	13:00	0	0	0
8	13:00	14:00	0	0	0
9	14:00	15:00	0	0	0
10	15:00	16:00	795	150	945
11	16:00	17:00	875	150	1025
12	17:00	18:00	890	155	1045
13	18:00	19:00	0	0	0
14	19:00	20:00	0	0	0
15	20:00	21:00	0	0	0
16	21:00	22:00	0	0	0

Warrant 2: Four-Hour Volume 70%

Warrant Evaluated? Yes
Warrant Satisfied? Yes
Manually Set To:

Hour Start	17:00	16:00	7:00	15:00
Major Road Vol.	890	875	800	795
Minor Road Vol.	155	150	170	150

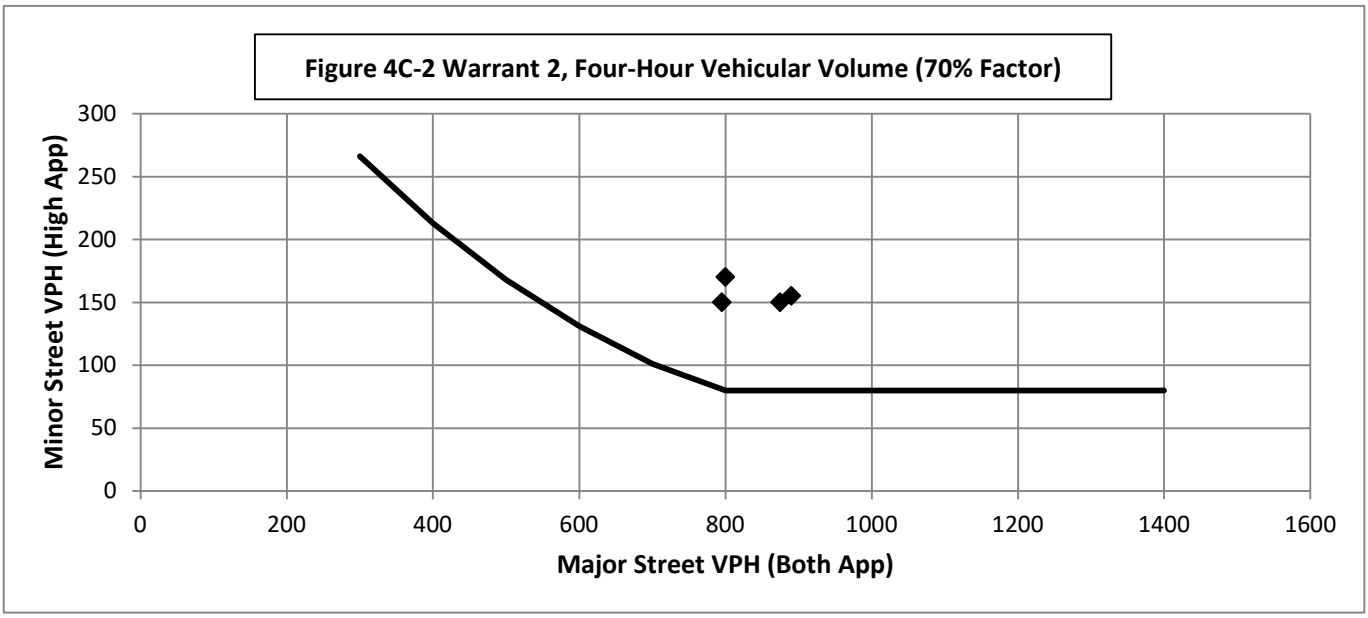

Warrant 3: Peak Hour Volume 70%

Warrant Evaluated? Yes **Warrant Satisfied? Yes** **Manually Set To:**

Condition justifying use of warrant:

Criteria		Met?
Delay on Minor Approach	5	Yes
Volume on Minor Approach	150	Yes
Total Entering Volume (veh/h)	800	

Manually Set Peak Hour? No

Peak Hour	Major Road Vol. (Both App.)	Minor Road Vol. (High App.)
17:00	890	155

Figure 4C-4 Warrant 3, Peak Hour (70% Factor)

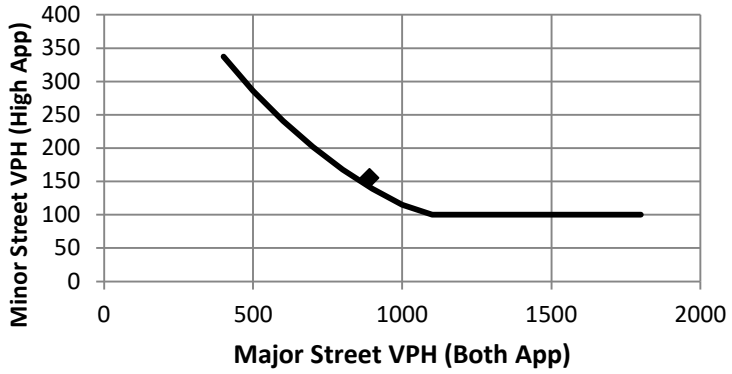

Warrant 4: Pedestrian Volume 70%

Warrant Evaluated? No **Warrant Satisfied? N/A** **Manually Set To:**

Criterion A: Four Hour

Hour (Start)	Pedestrian Volume	Major Road Vol.
		0
		0
		0
		0

Manually Set Major Rd Vol?

Avg. walk speed less than 3.5 ft/s?

Criterion A Satisfied?

Figure 4C-6 Warrant 4, Pedestrian Four-Hour Volume (70% Factor)

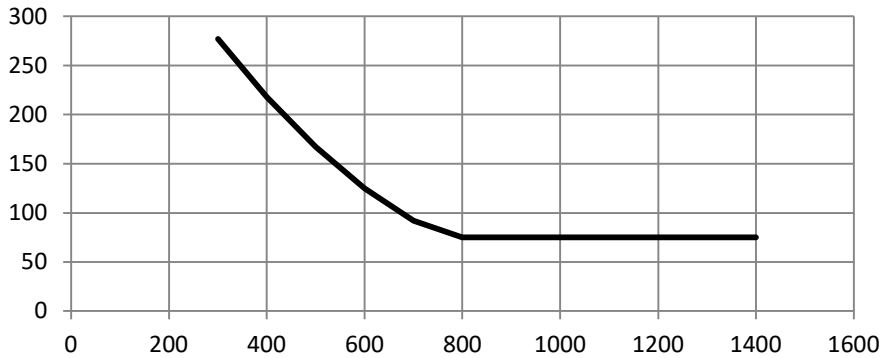

Criterion B: Peak Hour

Peak Hour	Pedestrian Vol.	Major Road Vol.
0:00	0	0

Criterion B Satisfied?

Figure 4C-8 Warrant 4, Pedestrian Peak Hour (70% Factor)

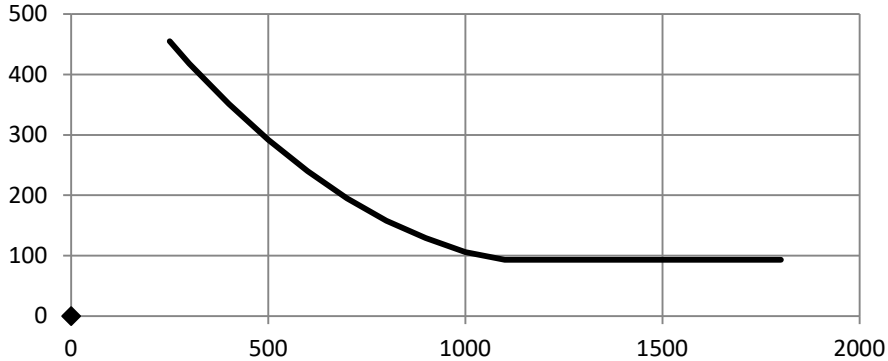

Warrant 5: School Crossing 70%

Warrant Evaluated? No **Warrant Satisfied? N/A** **Manually Set To:**

	Criteria	Fulfilled?
1	There are a MINIMUM of 20 school children during the highest crossing hour.	
2	There are fewer adequate gaps in the major road traffic stream during the period when the school children are using the crossing than the number of minutes in the same period.	
3	The nearest traffic signal along the major road is located more than 300 ft away. Or, the nearest traffic signal is within 300 ft but the proposed traffic signal will not restrict the progressive movement of traffic.	

Warrant 6: Coordinated Signal System 70%

Warrant Evaluated? No **Warrant Satisfied? N/A** **Manually Set To:**

	Criteria	Fulfilled?
1	Signal spacing > 1000 ft	
2	On a one-way road or a road that has traffic predominantly in one direction, the adjacent signals are so far apart that they do not provide the necessary degree of vehicle platooning.	
3	On a two-way road, adjacent signals do not provide the necessary degree of platooning and the proposed and the adjacent signals will collectively provide a progressive operation.	

Warrant 7: Crash Experience 70%

Warrant Evaluated? No **Warrant Satisfied? N/A** **Manually Set To:**

	Criteria		Met?	Fulfilled?
1	Adequate trial of other remedial measures has failed to reduce crash frequency.			
	Measures Tried:			
2	Five or more reported crashes, of types susceptible to correction by signal, have occurred within a 12 month period.	# of crashes per 12 months		
3	Warrant 1, Condition A (80%)		No	No
	Warrant 1, Condition B (80%)		No	
	Warrant 4, Criterion A (80%)		No	
	Warrant 4, Criterion B (80%)		No	

Warrant 8: Roadway Network 70%

Warrant Evaluated? No **Warrant Satisfied? N/A** **Manually Set To:**

	Criteria				Met?	Fulfilled?
1	Total entering volume of at least 1,000 veh/h during typical weekday peak hour			1045	Yes	No
	Five-year projected volumes that satisfy one or more of Warrants 1, 2, or 3.				No	
2	Total entering vol. of at least 1,000 veh/h for each of any 5 hrs of non-normal business day (Sat. or Sun.)					
	Hour					
	Volume					

	Characteristics of Major Routes - Select yes if all intersecting routes have characteristic	Fulfilled?
1	Part of the road or highway system that serves as the principal roadway network for through traffic flow	
2	Rural or suburban highway outside of, entering, or traversing a city	
3	Appears as a major route on an official plan	

Warrant 9: Intersection Near a Grade Crossing 70%

Warrant Evaluated? **Warrant Satisfied? N/A** **Manually Set To:**

Adjustment Factors			Manually Set Peak Hour?				
Rail Traffic per Day	% High Occupancy Buses on Minor Road	% Tractor-Trailer Trucks on Minor Road	D	Peak Hour	Major Road Vol.	Minor Road Vol.	Adjusted Minor Vol.
1	0	0% to 2.5%	660	17:00	890	155	51.925

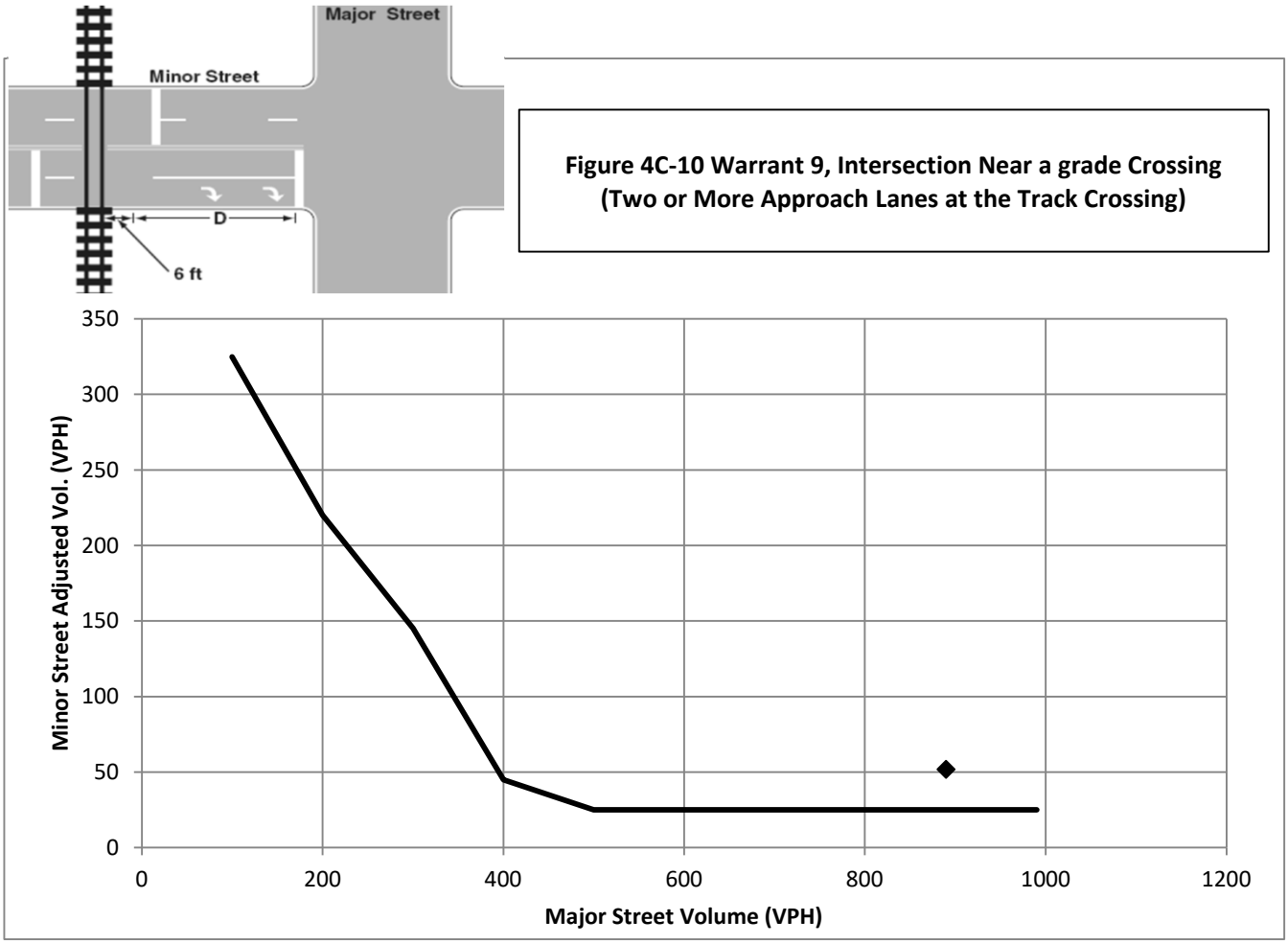

Conclusions/Comments:

Using Year 2040 projected volumes (0.5% growth/year) and rerouting traffic from Grand Avenue through Clough

Updated: 2/18/2016

Hourly Volume Data

One Hour Time Period Start Time		↓ From North (SB)					← From East (WB)					↑ From South (NB)					→ From West (EB)					Total Vehicle Volume
		Right	Thru	Left	U-Tn	Total	Right	Thru	Left	U-Tn	Total	Right	Thru	Left	U-Tn	Total	Right	Thru	Left	U-Tn	Total	
AM	6:00	25	15	40		80	25	155	10		190	10	15	15		40	30	245	35		310	620
	7:00	70	15	85		170	90	235	15		340	25	20	25		70	35	350	75		460	1040
	8:00	30	15	30		75	35	230	10		275	15	20	25		60	50	240	25		315	725
	9:00					0					0					0					0	0
MD	10:00					0					0					0					0	0
	11:00					0					0					0					0	0
	12:00					0					0					0					0	0
	13:00					0					0					0					0	0
PM	14:00					0					0					0					0	0
	15:00	65	30	55		150	70	265	40		375	40	40	50		130	135	245	40		420	1075
	16:00	55	35	60		150	85	315	35		435	20	45	50		115	105	280	55		440	1140
	17:00	70	30	55		155	85	300	55		440	30	40	55		125	130	265	55		450	1170
	18:00					0					0					0					0	0
	19:00					0					0					0					0	0
	20:00					0					0					0					0	0
	21:00					0					0					0					0	0
Totals		315	140	325	0	780	390	1500	165	0	2055	140	180	220	0	540	485	1625	285	0	2395	5770

Note: Copy volume data and paste into cells using paste special -> values

Note: U-Turns are counted as Left Turns in the Volume Totals

Please Select the Major Road: E/W

Major Road Left Turn as Minor Approach? No

% Right Turns Included (Default 0%)

From North (SB)	100%
From East (WB)	100%
From South (NB)	100%
From West (EB)	100%

Major Road Volume Totals: East/West					Minor Road Highest Volume: North/South				
Right	Thru	Left	T+LT	Total	Right	Thru	Left	T+LT	Total
55	400	45	445	500	25	15	40	55	80
125	585	90	675	800	70	15	85	100	170
85	470	35	505	590	30	15	30	45	75
0	0	0	0	0	0	0	0	0	0
0	0	0	0	0	0	0	0	0	0
0	0	0	0	0	0	0	0	0	0
0	0	0	0	0	0	0	0	0	0
0	0	0	0	0	0	0	0	0	0
0	0	0	0	0	0	0	0	0	0
205	510	80	590	795	65	30	55	85	150
190	595	90	685	875	55	35	60	95	150
215	565	110	675	890	70	30	55	85	155
0	0	0	0	0	0	0	0	0	0
0	0	0	0	0	0	0	0	0	0
0	0	0	0	0	0	0	0	0	0
0	0	0	0	0	0	0	0	0	0
875	3125	450	3575	4450	315	140	325	465	780

TWO PARTY DESIGN ENGINEERING SERVICES CONTRACT
SIGNATURE PAGES

ENGINEERING SERVICES CONTRACT

BETWEEN THE VILLAGE OF JACKSON (MUNICIPALITY)

AND DAAR ENGINEERING, INC. (CONSULTANT) FOR

Main Street Roundabout
Intersection of Main Street and Eagle Drive
STH 60
Washington County

This CONTRACT made and entered into by and between the MUNICIPALITY and the CONSULTANT provides for those SERVICES described in the Scope of Services and Special Provisions and is generally for the purpose of providing reconstruction of the intersection of Main Street and Eagle Drive in the Village of Jackson, Washington County.

The MUNICIPALITY deems it advisable to engage the CONSULTANT to provide certain engineering SERVICES and has authority to contract for these SERVICES under sec. 84.01(13), Wis. Stats.

The MUNICIPALITY REPRESENTATIVE is: Mr. Brian Kober, P.E., Director - Village of Jackson, Department of Public Works; W194 N16660 Eagle Drive; PO Box 637, Jackson, WI 53037; brian.kober@villageofjacksonwi.gov; and 262-677-0707.

The CONSULTANT REPRESENTATIVE is: Mr. Stan Lukasz; Design Project Manager; 518 W. Cherry Street, Milwaukee, WI 53212; stan.lukasz@daarcorp.com; and (414) 839-4447.

The CONSULTANT SERVICES will be performed for the MUNICIPALITY located in Jackson, WI and will be completed by June 30, 2024. Deliver PROJECT DOCUMENTS to W194 N16660 Eagle Drive; PO Box 637, Jackson, WI 53037, unless other directions are given by the DEPARTMENT.

Compensation for all SERVICES provided by the CONSULTANT under the terms of the CONTRACT will be from the MUNICIPALITY.

For Roadway Design Services consisting of plan production, survey, public involvement, design reports and PS&E production, actual costs to the CONSULTANT not to exceed $89,912.57.

For Roundabout and Structural Design Services subcontracted to MSA Professional Services, actual costs to the CONSULTANT not to exceed $166,980.00.

For Lighting Design Services subcontracted to Powrtek Engineering, Inc., actual costs to the CONSULTANT not to exceed $7,445.44.

For Soils Investigation and Report subcontracted to Himalayan Consultants, LLC (DBE), the CONSULTANT's actual cost not to exceed $9,988.39 in total.

TWO PARTY DESIGN ENGINEERING SERVICES CONTRACT
SIGNATURE PAGES

For Title Reports and Updates subcontracted to Knight-Barry Title Group, the CONSULTANT's actual cost not to exceed $1,050.00.

For Appraisal Services subcontracted to Metropolitan Appraisal, the CONSULTANT's actual cost not to exceed $10,000.

For Appraisal Review Services subcontracted to Valbridge Property Advisors, the CONSULTANT's actual cost not to exceed $10,000.

For Phase 2.5 Hazardous Materials Assessment Services subcontracted to Ramboll, the CONSULTANT's actual cost not to exceed $11,528.00.

For Cultural Resource Investigations and Report subcontracted to the University of Wisconsin-Milwaukee, Cultural Resource Management (UWM-CRM), the CONSULTANT's actual costs paid to UWM CRM based on UWM CRM's actual cost up to $ 8,879.34, plus fixed fee of $ 0.00 not to exceed $ 8,879.34 in total.

Compensation for authorized services above not to exceed $302,794.40

The CONSULTANT does and will comply with the laws and regulations relating to the profession of engineering and will provide the desired engineering SERVICES.

This CONTRACT incorporates and the parties agree to all of the standard provisions of the Two-Party Design Engineering Services Contract and referenced in Procedure 8-15-1 of the State of Wisconsin Department of Transportation Facilities Development Manual. CONSULTANT acknowledges receipt of a copy of these standard provisions.

This CONTRACT incorporates all of the MANUALS defined in the CONTRACT.

The parties also agree to all of the Special Provisions which are annexed and made a part of this CONTRACT, consisting of 22 pages.

Nothing in this CONTRACT accords any third part beneficiary rights whatsoever on any non-party that may be enforced by any non-party to this contract.

For the CONSULTANT	Approved for the MUNICIPALITY
By:_____	By: _____
Title: Design Project Manager_____	Title: _____
Date:_____	Date: _____

TWO PARTY DESIGN ENGINEERING SERVICES CONTRACT
STANDARD PROVISIONS

Page

I. DEFINITIONS 2
II. SCOPE OF SERVICES 3
A. General 3
B. Control and Authority 4
C. Services to be Performed by the CONSULTANT 4
D. Agency Coordination 4
III. PROSECUTION AND PROGRESS 4
A. Start of SERVICES 4
B. Progress 4
C. Completion of SERVICES 4
D. Delays and Extensions 5
E. Termination of CONTRACT 5
F. Subletting or Assignment of CONTRACT 6
IV. BASIS OF PAYMENT 6
A. General 6
B. SERVICE Orders, Extra SERVICES, or Decreased SERVICES 6
C. Errors and Omissions 7
V. MISCELLANEOUS PROVISIONS 7
A. Professional Practice 7
B. Ownership of Document 7
C. Legal Relations 7
D. Prevailing Wage Rate 7
E. Nondiscrimination in Employment 7
F. Federal Requirements for Disadvantaged Business Program 8
G. Equal Opportunity Employment 9
H. Implementation of Clean Air and Clean Water Act 9
I. Conflict of Interest 10
J. Certification Regarding Lobbying 10
K. Contingent Fees 10
L. Certification Regarding Debarment, Suspension, and Other Responsibility Matters – All Covered Transactions 11
M. Certification Regarding Debarment, Suspension, and Other Responsibility Matters – Primary Covered Transactions 12
N. Insurance Requirements 12
O. Choice of Law 12
P. Choice of Forum 12
Q. Entire Agreement 12
R. Severability 12
VI. Attachments 13
A. Insurance Table 13
B. Special Provisions 13

I. DEFINITIONS

A. AUTHORIZATION: written direction from the DEPARTMENT to the CONSULTANT to proceed; it references this CONTRACT, the specific SERVICES to be performed and the DEPARTMENT PROJECT ID to which costs will be charged.

B. CONSTRUCTION CONTRACT: agreement between the DEPARTMENT and a CONTRACTOR setting forth the obligations of the parties to the CONSTRUCTION CONTRACT, including, but not limited to, performance of the WORK, furnishing of labor and materials and basis of payment.

C. CONSULTANT: individual, partnership, joint venture, corporation or agency undertaking the performance of the SERVICES designated under the terms of the CONTRACT and acting directly or through a duly authorized representative.

D. CONSULTANT REPRESENTATIVE: employee designated by the CONSULTANT to act as liaison between the CONSULTANT and the DEPARTMENT

E. CONTRACT: agreement between the DEPARTMENT and a CONSULTANT setting forth the obligations of the parties to the CONTRACT, including, but not limited to, theses standard provisions, performance of the SERVICES, furnishing of labor and materials and basis of payment. The CONTRACT type may be a MASTER CONTRACT, which will include SERVICES to be provided under a WORK ORDER.

F. CONTRACT AMENDMENT: agreement between the DEPARTMENT and a CONSULTANT setting forth the change in SERVICES from the original contract. The change in compensation, fixed fee and completion date, if any, shall be agreed upon by the DEPARTMENT and the CONSULTANT.

G. CONTRACTOR: individual, partnership, joint venture, corporation or agency undertaking the performance of the WORK designated under the terms of a CONSTRUCTION CONTRACT and acting directly or through a duly authorized representative.

H. DEPARTMENT: Wisconsin Department of Transportation.

I. DEPARTMENT REPRESENTATIVE: employee of the DEPARTMENT in immediate charge of this CONTRACT and designated to act as liaison between the DEPARTMENT and the CONSULTANT

J. FHWA: Federal Highway Administration.

K. MANUALS: DEPARTMENT'S Construction and Materials Manual (CMM); Finals Process for Let Project Closeout; Facilities Development Manual (FDM); LRFD Bridge Manual (BM); and Standard Specifications for Highway and Structure Construction (Standard Specifications,) and materials referenced in those manuals.

L. MASTER CONTRACT: a type of CONTRACT under which WORK ORDERS are issued.

M. MUNICIPALITY: city, village, town, or county.

N. MUNICIPALITY REPRESENTATIVE: employee of the MUNICIPALITY in immediate charge of this CONTRACT and designated to act as liaison between the MUNICIPALITY and the CONSULTANT.

O. PROJECT: specific section of highway proposed for improvement by the DEPARTMENT in this CONTRACT. Each PROJECT or other described activity has a unique project ID.

P. PROJECT DOCUMENTS: all materials, guides, written instructions, plans, documents, correspondence, forms, computer files, databases, electronic mail messages, work product or other information of any type created by the CONSULTANT for the DEPARTMENT under this CONTRACT.

Q. SERVICES: engineering or other services, labor, equipment, and materials furnished by the CONSULTANT in accordance with this CONTRACT.

R. WORK: The furnishing of all labor, materials, equipment, and incidentals and the performing of all tasks needed to complete the project or a specific part of the project as specified in the CONSTRUCTION CONTRACT, together with the fulfillment of all associated obligations and duties required under the CONSTRUCTION CONTRACT.

S. WORK ORDER: a type of CONTRACT issued under the terms of a MASTER CONTRACT.

II. SCOPE OF SERVICES

A. General

1. Active Voice
   a. The DEPARTMENT defines the CONSULTANT and DEPARTMENT responsibilities within the contract documents in one of the following ways:
      (1) Taken in context, the contract language makes the responsible party clear.
      (2) Direct commands are written to the CONSULTANT in the active voice-imperative mood.
   b. If the CONSULTANT thinks the responsibility for an action under the CONTRACT is unclear or given to the wrong party, the CONSULTANT will seek clarification from the DEPARTMENT.
   c. Sentences directing the CONSULTANT to perform SERVICES are written in the active voice-imperative mood. These CONSULTANT directions are written as commands. For example, the basic requirement to perform the CONTRACT SERVICES would be expressed as, “Furnish all SERVICES to accomplish this CONTRACT," rather than “The CONSULTANT shall furnish all SERVICES to accomplish this CONTRACT”. In the imperative mood, the subject "the CONSULTANT” is understood.
   d. Requirements to be performed by others are written in the active voice. Sentences written in the active voice identify the party responsible for performing the action. For example, "The DEPARTMENT will provide manuals, guides, written instructions and other information and data necessary to enable the CONSULTANT to perform the SERVICES to the same standards required of the DEPARTMENT’S personnel." Certain requirements of the CONSULTANT may also be written in the active voice, rather than the active voice-imperative mood, if the sentence includes requirements for others in addition to the CONSULTANT. For example, a sentence that involves action by both the CONSULTANT and the DEPARTMENT would be expressed, “At the request of the DEPARTMENT, the CONSULTANT shall furnish maps, portions of plans, supplemental reports or other information relating to the SERVICES."
   e. Sentences that define terms, describe a product or desired result, or describe a condition that may exist are written in neither the active voice nor the imperative mood. These types of sentences that describe a condition use verbs requiring no action. For example, "The DEPARTMENT REPRESENTATIVE is identified in the CONTRACT."
2. Perform all SERVICES consistent with applicable standards and requirements contained in the MANUALS. Revisions to the MANUALS made subsequent to the execution of this CONTRACT will be considered as orders defined in (IV)(B)(1.)
3. Furnish all SERVICES, materials, equipment, supplies, and incidentals other than those designated in writing to be furnished by the DEPARTMENT and check or test them prior to use.
4. The DEPARTMENT and FHWA may participate in all conferences and reviews.
5. Confer with the DEPARTMENT and prepare and present such information and studies pertinent or requested by the DEPARTMENT to enable it to reasonably pass judgment on the features of the SERVICES. The CONSULTANT shall make such changes or revisions to the SERVICES required by the DEPARTMENT.
6. The DEPARTMENT reserves the right to select the alternative to be used and may request additional alternatives be studied.
7. At the request of the DEPARTMENT furnish maps, portions of plans, supplemental reports or other information relating to the SERVICES.
8. This CONTRACT serves as a permit under sec. 86.07(2), Wis. Stats., for the CONSULTANT to perform the SERVICES on property under the jurisdiction of the DEPARTMENT, unless a

separate permit is required by the DEPARTMENT REPRESENTATIVE. The CONSULTANT is an authorized representative of the DEPARTMENT for purposes of the right of entry under sec. 84.01(10), Wis. Stats., to enter private lands to perform the SERVICES.

9. The SERVICES under this CONTRACT are subject to review and approval by the DEPARTMENT at those appropriate steps defined in detail in the MANUALS.

B. Control and Authority
   1. DEPARTMENT
      (1) The DEPARTMENT REPRESENTATIVE is identified in this CONTRACT and will monitor CONSULTANT compliance with the CONTRACT.

C. SERVICES to be Performed by the CONSULTANT
   1. Perform field operations in accordance with Occupational Safety and Health Administration (OSHA) regulations and accepted professional practice.
   2. Railroad and Utility Coordination
      a. Arrange for applicable utility and railroad coordination as set forth in the MANUALS.
      b. Provide necessary information to allow the DEPARTMENT to negotiate utility and railroad agreements.
   3. Surveys
      a. Make surveys to accomplish the SERVICES in accordance with the MANUALS.
      b. Surveys shall be tied into the coordinate system as specified in the Special Provisions.
   4. Soils and Subsurface Investigation
      a. Prepare a Soils Report(s) in accordance with the MANUALS.
      b. Recommend additional subsurface SERVICES, if warranted.
   5. Public Involvement
      a. Prepare a Public Involvement Plan according to the MANUALS.
      b. Maintain a log of public and agency involvement activities.
      c. Assist the DEPARTMENT in answering all questions received from the general public.
   6. Schedule and attend meetings and conferences as required in the Special Provisions.
   7. Prepare the Plans, Specifications, and Estimates (P.S. & E.) as specified in the MANUALS.
   8. Unless terminated, the CONTRACT is in full force and effect for the purposes of requiring changes or revisions in accepted SERVICES.

D. Agency Coordination
   1. General
      a. Consult with applicable affected local, state, and federal agencies and supply them with the necessary information according to the MANUALS.
      b. Contact with the FHWA shall be only through the DEPARTMENT.
   2. Prepare necessary permit applications according to the MANUALS.

III. PROSECUTION AND PROGRESS

A. Start of Services
   1. Commence SERVICES upon AUTHORIZATION from the DEPARTMENT.
   2. The DEPARTMENT will not be liable for payment for SERVICES performed without AUTHORIZATION.

B. Progress
   1. Prepare progress reports documenting the SERVICES performed to date.

C. Completion of Services
   1. Notify the DEPARTMENT when the SERVICES have been completed.
   2. The DEPARTMENT will notify the CONSULTANT of the formal acceptance of the completed SERVICES.

D. Delays and Extensions
   1. The DEPARTMENT may extend the time for completion, with a CONTRACT AMENDMENT, in the event of an excusable non-compensable delay as defined in the Standard Specifications.
   2. Prior to completion of the CONTRACT, request, if desired, a CONTRACT AMENDMENT for an excusable delay.

E. Termination of Contract
   1. Termination for Cause – Default
      a. The DEPARTMENT may terminate this CONTRACT, in whole or in part, upon default by CONSULTANT, including:
         (1) Failing to begin the SERVICES under the CONTRACT within the time specified.
         (2) Failing to perform the SERVICES with sufficient workers, equipment, or materials to complete the SERVICES within the specified time.
         (3) Failing to complete the CONTRACT within the CONTRACT time specified, as extended by the DEPARTMENT.
         (4) Performing the SERVICES unsuitably, or not obeying a DEPARTMENT directive to remove and replace or otherwise correct unacceptable SERVICES.
         (5) Discontinuing the prosecution of the SERVICES before completion without the DEPARTMENT'S permission.
         (6) Failing to resume SERVICES that the DEPARTMENT discontinued within a reasonable time after notice to do so.
         (7) Insolvency or bankruptcy, or committing an act of bankruptcy or insolvency.
         (8) Allowing a final judgment against the CONSULTANT to stand unsatisfied for a period of 48 hours.
         (9) Making an assignment for the benefit of creditors.
         (10) Failing to comply with the provisions of the CONTRACT.
         (11) Failing to acquire or maintain the required insurance.
         (12) Failing to perform the SERVICES in an acceptable manner.
      b. The DEPARTMENT will notify the CONSULTANT in writing of a default condition specifying the default and the action required. If the CONSULTANT, within a period of 10 calendar days of the notice, fails to proceed satisfactorily in compliance therewith, the DEPARTMENT then has full power and authority to take the performance of SERVICES out of the hands of the CONSULTANT; to use all suitable materials and equipment on the project; or to enter into CONTRACT, or use other methods that the DEPARTMENT requires to perform the SERVICES.
      c. If the DEPARTMENT takes over or reassigns the incomplete SERVICES (III)(E)(a), the DEPARTMENT will deduct all additional costs and damages and the costs and charges of completing the SERVICES under CONTRACT from payments due the CONSULTANT. If that total exceeds the sum that would have been payable under the CONTRACT, the DEPARTMENT will consider the CONSULTANT liable, and the CONSULTANT shall pay the excess sum to the DEPARTMENT.
      d. The DEPARTMENT will not relieve the CONSULTANT of the liability for the assessment of liquidated damages because of the CONSULTANT'S default.
      e. The rights and remedies of the DEPARTMENT are in addition to all other rights and remedies provided by law or under the CONTRACT.
   2. Termination for Convenience
      a. The DEPARTMENT may terminate the CONTRACT in whole or in part after determining that termination is in the DEPARTMENT'S or the public interest.
      b. The DEPARTMENT will deliver to the CONSULTANT a termination notice specifying the extent of termination and the effective date.

c. Upon receipt of a termination notice, do not proceed with the affected SERVICES unless directed to do so in that notice. Complete all SERVICES specified in the termination notice. The DEPARTMENT reserves the right to declare in default a CONSULTANT who does not carry out the conditions of a termination for convenience.
d. If the DEPARTMENT orders termination of the CONTRACT for convenience, the CONSULTANT shall be paid for the SERVICES rendered, an amount bearing the same ratio to the total CONTRACT amount as the amount of SERVICES completed or partially completed and delivered to the DEPARTMENT bears to the total amount of SERVICES provided for herein, as a CONTRACT AMENDMENT.
e. If the DEPARTMENT directs, the CONSULTANT shall promptly remove equipment and supplies from the project site or other DEPARTMENT property. If the CONSULTANT does not remove the equipment and supplies as directed, the DEPARTMENT may do so at the CONSULTANT'S expense.
f. The DEPARTMENT will not relieve the CONSULTANT of contractual responsibilities for the SERVICES performed and SERVICES completed.

F. Subletting or Assignment of Contract
1. Obtain approval to sublet or assign any part of this CONTRACT.
2. Perform SERVICES amounting to at least one-half of the original CONTRACT amount.
3. Retain full responsibility for the fulfillment of the CONTRACT.

IV. BASIS OF PAYMENT

A. General
1. The CONSULTANT will be paid for the performed and approved SERVICES under this CONTRACT.
2. Reimbursement for costs will be limited to those which are allowable under 48 CFR Part 31 and by DEPARTMENT policy.
3. Submit invoices for the SERVICES performed to date. The final invoice shall be submitted within three months of completion of SERVICES.
4. Submit a separate invoice and a separate final invoice for each individual PROJECT.
5. Payment does not constitute acceptance of unsatisfactory or defective SERVICES.
6. The DEPARTMENT has the equitable right to set off against any sum due and payable to CONSULTANT under this CONTRACT, any amount the DEPARTMENT determines the CONSULTANT owes the DEPARTMENT, whether arising under this CONTRACT or under any other CONTRACT.
7. Maintain and make available all records pertaining to all costs incurred for inspection by the DEPARTMENT, the FHWA, and the Comptroller General of the United States for three years following the final payment.
8. Compensation will not exceed the total CONTRACT amount unless authorized by a CONTRACT AMENDMENT.
9. Compensation will not be allowed for improper CONSULTANT performance.
10. Pay subconsultants within 10 business days of receipt of a payment for SERVICES performed.

B. SERVICE Orders, Additional SERVICES, or Decreased SERVICES
1. The DEPARTMENT may give orders regarding the SERVICES including additional SERVICES or the elimination of required SERVICES until the CONTRACT is terminated.
   a. If the order will not increase or decrease SERVICES, there is no change to the CONTRACT amount.
   b. The CONSULTANT must notify the DEPARTMENT if extra compensation is desired for the SERVICES in (IV)(B)(1)(a).

c. If the order will increase or decrease SERVICES the DEPARTMENT and the CONSULTANT will negotiate adjustments to the CONTRACT amount and submit a CONTRACT AMENDMENT.

C. Errors and Omissions
1. Be responsible for the accuracy of the SERVICES, and promptly make necessary revisions to its SERVICES resulting from its negligent acts, errors, or omissions without additional compensation.
2. Give immediate attention to these revisions to prevent or minimize delay to any PROJECT.
3. Be responsible to the DEPARTMENT for any losses to or costs to repair or remedy as a result of negligent acts, errors or omissions.
4. Unless terminated, the CONTRACT is in full force and effect for the purposes of requiring revisions in the SERVICES necessary to correct errors or omissions.

V. MISCELLANEOUS PROVISIONS

A. Professional Practice
1. Perform all SERVICES consistent with generally accepted professional practice.

B. Ownership of Documents
1. The DEPARTMENT is owner of all PROJECT DOCUMENTS.
2. Deliver all PROJECT DOCUMENTS within 10 business days of request or completion of CONTRACT.
3. The DEPARTMENT'S reuse of PROJECT DOCUMENTS other than for the intended PROJECT shall be at the sole risk of the DEPARTMENT.

C. Legal Relations
1. Comply with and observe applicable federal, state, and local laws, ordinances, and regulations in effect at the time the SERVICES are performed.
2. Indemnify the DEPARTMENT and the FHWA and all of their officers, agents, and employees on account of any damages to persons or property resulting from negligence in performance of the SERVICES, errors, omissions and/or noncompliance with any applicable federal, state or local laws.
3. Be responsible for all damages to property or persons arising out of negligent act, error and/or omission.

D. Prevailing Wage Rate
1. Sec. 103.50, Wis. Stats., the Wisconsin prevailing wage rate law, does not apply.

E. Nondiscrimination in Employment
1. The CONSULTANT will comply with the Acts and the Regulations relative to Non-discrimination in Federally-assisted programs of the U.S. Department of Transportation, Federal Highway Administration (FHWA), as they may be amended from time to time, which are herein incorporated by reference and made a part of this CONTRACT.
2. The CONSULTANT, with regard to the SERVICES performed by it during the CONTRACT, will not discriminate on the grounds of race, color, or national origin in the selection and retention of subconsultants, including procurements of materials and leases of equipment. The CONSULTANT will not participate directly or indirectly in the discrimination prohibited by the Acts and the Regulations, including employment practices when the contract covers any activity, project, or program set forth in Appendix B of 49 CFR Part 21.
3. In all solicitations, either by competitive bidding, or negotiation made by the CONSULTANT for SERVICES to be performed under a subcontract, including procurements of materials, or leases of equipment, each potential subconsultant or supplier will be notified by the CONSULTANT of the CONSULTANT'S obligations under this CONTRACT and

the Acts and the Regulations relative to Non-discrimination on the grounds of race, color, or national origin.

4. The CONSULTANT will provide all information and reports required by the Acts, the Regulations, and directives issued pursuant thereto and will permit access to its books, records, accounts, other sources of information, and its facilities as may be determined by the Recipient or FHWA to be pertinent to ascertain compliance with such Acts, Regulations, and instructions. Where any information required of a CONSULTANT is in the exclusive possession of another who fails or refuses to furnish the information, the CONSULTANT will so certify to the Recipient or the FHWA, as appropriate, and will set forth what efforts it has made to obtain the information.
5. In the event of the CONSULTANT'S noncompliance with the Non- discrimination provisions of this CONTRACT, the Recipient will impose such contract sanctions as it or the FHWA may determine to be appropriate, including, but not limited to:
   a. Withholding payments to the CONSULTANT under the CONTRACT until the CONSULTANT complies; and/or
   b. Cancelling, terminating, or suspending the CONTRACT, in whole or in part.
6. The CONSULTANT will include the provisions of (V)(E) in every subcontract, including procurements of materials and leases of equipment, unless exempt by the Acts, the Regulations and directives issued pursuant thereto. The CONSULTANT will take action with respect to any subcontract or procurement as the Recipient or the FHWA may direct as a means of enforcing such provisions including sanctions for noncompliance. Provided, that if the CONSULTANT becomes involved in, or is threatened with litigation by a subcontractor, or supplier because of such direction, the CONSULTANT may request the Recipient to enter into any litigation to protect the interests of the Recipient. In addition, the CONSULTANT may request the United States to enter into the litigation to protect the interests of the United States.

F. Federal Requirements for Disadvantaged Business Program

1. Disadvantaged Businesses Enterprises (DBE) as defined in 49 CFR Part 26 and federal law shall have the maximum opportunity to participate in the performance of contracts financed in whole or in part with federal funds. Consequently, the DBE requirements 49 CFR Part 26 and federal law apply to this CONTRACT (and any WORK ORDER) only when they are federally funded.
2. When any portion of this CONTRACT is federally funded and Federal law in effect at the time this CONTRACT is executed authorizes and requires it, the CONSULTANT agrees to ensure that DBE'S have the maximum opportunity to participate in the performance of any subcontracts financed in whole or in part with federal funds provided under this agreement. Take all necessary and reasonable steps in accordance with 49 CFR Part 26 to ensure that DBE's have the maximum opportunity to compete for and perform subcontracts. The CONSULTANT shall not discriminate on the basis of race, color, national origin, or sex in the award and performance of contracts. Failure to carry out the requirements of this provision shall constitute a breach of contract and may result in termination of this CONTRACT (or any WORK ORDER) by the DEPARTMENT or other such remedy as the DEPARTMENT deems appropriate.
3. When this CONTRACT is federally funded, identify, by name, the DBE'S whose utilization is intended to satisfy this provision, the items of SERVICES involved, and the dollar amounts of such items of SERVICES.
4. When this CONTRACT is federally funded, maintain records and document its performance under this item.

G. Equal Employment Opportunity (All Contracts Exceeding $10,000)
   1. During the performance of this CONTRACT, the CONSULTANT, for itself, its assignees, and successors in interest agrees to comply with the following non-discrimination statutes and authorities; including but not limited to:
      a. Title VI of the Civil Rights Act of 1964 (42 U.S.C. § 2000d *et seq.,* 78 stat. 252), (prohibits discrimination on the basis of race, color, national origin); and 49 CFR Part 21.
      b. The Uniform Relocation Assistance and Real Property Acquisition Policies Act of 1970, (42 U.S.C. §4601), (prohibits unfair treatment of persons displaced or whose property has been acquired because of Federal or Federal-aid programs and projects);
      c. Federal-Aid Highway Act of 1973, (23 U.S.C. § 324 *et seq.),* (prohibits discrimination on the basis of sex);
      d. Section 504 of the Rehabilitation Act of 1973, (29 U.S.C. § 794 *et seq.),* as amended, (prohibits discrimination on the basis of disability); and 49 CFR Part 27;
      e. The Age Discrimination Act of 1975, as amended, (42 U.S.C. § 6101 *et seq.),* (prohibits discrimination on the basis of age);
      f. Airport and Airway Improvement Act of 1982, (49 USC § 471, Section 47123), as amended, (prohibits discrimination based on race, creed, color, national origin, or sex);
      g. The Civil Rights Restoration Act of 1987, (PL 100-209), (Broadened the scope, coverage and applicability of Title VI of the Civil Rights Act of 1964, The Age Discrimination Act of 1975 and Section 504 of the Rehabilitation Act of 1973, by expanding the definition of the terms "programs or activities" to include all of the programs or activities of the Federal-aid recipients, sub-recipients and contractors, whether such programs or activities are Federally funded or not);
      h. Titles II and III of the Americans with Disabilities Act, which prohibit discrimination on the basis of disability in the operation of public entities, public and private transportation systems, places of public accommodation, and certain testing entities (42 U.S.C. §§ 12131-12189) as implemented by Department of Transportation regulations at 49 C.P.R. parts 37 and 38;
      i. The Federal Aviation Administration's Non-discrimination statute (49 U.S.C. § 47123) (prohibits discrimination on the basis of race, color, national origin, and sex);
      j. Executive Order 12898, Federal Actions to Address Environmental Justice in Minority Populations and Low-Income Populations, which ensures discrimination against minority populations by discouraging programs, policies, and activities with disproportionately high and adverse human health or environmental effects on minority and low-income populations;
      k. Executive Order 13166, Improving Access to Services for Persons with Limited English Proficiency, and resulting agency guidance, national origin discrimination includes discrimination because of limited English proficiency (LEP). To ensure compliance with Title VI, you must take reasonable steps to-ensure that LEP persons have meaningful access to your programs (70 Fed. Reg. at 74087 to 74100);
      l. Title IX of the Education Amendments of 1972, as amended, which prohibits you from discriminating because of sex in education programs or activities (20 U.S.C. 1681 et seq.)
   2. Include the provisions of (V)(G) in every subcontract in excess of $10,000.

H. Implementation of Clean Air Act and Clean Water Act (All Contracts Exceeding $10,000)

1. Stipulate that any facility to be utilized in the performance of this CONTRACT, unless such CONTRACT is exempt under the Clean Air Act and under the Clean Water Act is not listed, on the date of CONTRACT award, on the U.S. Environmental Protection Agency (EPA) List of Violating Facilities Pursuant to 40 CFR 15.20.
2. Comply with all the requirements of the Clean Air Act and the Clean Water Act and all regulations and guidelines listed therein.
3. Notify the DEPARTMENT (or MUNICIPALITY, in the case of a three-party contract) and the U.S. EPA Assistance Administrator for Enforcement of the receipt of any communication from the Director, Office of Federal Activities, EPA, indicating that a facility to be utilized for this CONTRACT is under consideration to be listed on the EPA List of Violating Facilities.
4. Include the provisions (V)(H) in every nonexempt subcontract.

I. Conflict of Interest
1. Warrant that neither it nor any of its affiliates have any financial or personal interest that would conflict in any manner with the performance of the SERVICES, and that neither it nor any of its affiliates will acquire directly or indirectly any such interest.
2. Warrant that it will not employ for any SERVICES any person who is employed by the DEPARTMENT at the time of execution or during the life of this contract without prior written approval from the DEPARTMENT.
3. Warrant that it will immediately notify the DEPARTMENT if any actual or potential conflict of interest arises or becomes known. Upon receipt of such notification a DEPARTMENT review and approval is required to continue to perform SERVICES under this CONTRACT.

J. Certification Regarding Lobbying
1. No Federal appropriated funds have been paid or will be paid, by or on behalf of the CONSULTANT, to any person for influencing or attempting to influence an officer or employee of any agency, a Member of Congress, an officer or employee of Congress, or an employee of a Member of Congress in connection with the awarding of any Federal contract, the making of any Federal grant, the making of any Federal loan, the entering into of any cooperative agreement, and the extension, continuation, renewal, amendment, or modification of any Federal contract, grant, loan, or cooperative agreement.
2. If any funds other than federal appropriated funds have been paid or will be paid to any person for influencing or attempting to influence an officer or employee of any agency, a Member of Congress, an officer or employee of Congress, or an employee of a Member of Congress in connection with this federal contract, grant, loan, or cooperative agreement, the CONSULTANT shall complete and submit standard form-LOLL, "Disclosure Form to Report Lobbying," in accordance with its instructions.
3. The CONSULTANT shall require that the language of this certification be included in the award documents for all sub-awards at all tiers (including subcontracts, sub-grants, and contracts under grants, loans, and cooperative agreements) and that all sub-recipients shall certify and disclose accordingly.
   This certification is a material representation of fact upon which reliance is placed when this transaction was made or entered into. Submission of this certification is a prerequisite for making or entering into this transaction imposed by section 1352, title 31, U.S. Code. Any person who fails to file the required certification shall be subject to a civil penalty of not less than $10,000 and not more than $100,000 for each such failure.

K. Contingent Fees
1. Warrant that only employee(s) working solely for the CONSULTANT solicited or secured this CONTRACT (or any WORK ORDERS), and that any fees, commissions, percentages, brokerage fees, gifts, or any other considerations, contingent upon or resulting from the award or

making of this CONTRACT (or any WORK ORDER) will be given only to employee(s) working solely for the CONSULTANT.

2. For breach or violation of this warranty, the DEPARTMENT may terminate this CONTRACT without liability, or deduct from the agreement price or consideration, or otherwise recover, the full amount of such fee, commission, percentage, brokerage fee, gift, or contingent fee.

L. Certification Regarding Debarment, Suspension, and Other Responsibility Matters-All Covered Transactions

1. For purposes of this section, “proposal” means this entire CONTRACT when signed and submitted by CONSULTANT to the DEPARTMENT before execution by the DEPARTMENT.
   a. Instructions for Certification
      (1) Signing and submitting this proposal provides the certification set out in section (V)(L)(1)(b) below.
      (2) The terms "covered transaction", "debarred", "suspended", "ineligible", "lower tier covered transaction", "participant", "person", "primary covered transaction", "principal", "proposal", and "voluntarily excluded", as used in this provision, have the meanings set out in the Definitions and Coverage sections of the rules implementing Executive Order 12549 and Chapter Trans 504 Wis. Admin. Code.
      (3) Include (V)(L) titled “Certification Regarding Debarment, Suspension, Ineligibility and Voluntary Exclusion—All Covered Transactions” without modification, in all lower tier covered transactions and in all solicitations for lower tier covered transactions.
      (4) Submit an explanation for the inability to provide the certification set out in (V)(L)(1)(b) below. The DEPARTMENT will determine if the explanation is sufficient to enter into this transaction. Failure to furnish a certification or explanation will exclude participation in this transaction.
      (5) The certification in this clause is a material representation of fact upon which reliance was placed when the DEPARTMENT determined to enter into this transaction. If it is later determined that the CONSULTANT knowingly rendered an erroneous certification the DEPARTMENT may pursue all available remedies.
      (6) Provide immediate written notice to the DEPARTMENT if at any time the CONSULTANT learns that its certification was invalid when submitted or has become invalid by reason of changed circumstances.
      (7) Will not enter into any lower tier covered transaction with a person who is debarred, suspended, declared ineligible, or voluntarily excluded from participation in this covered transaction without written notice by the DEPARTMENT. The DEPARTMENT may pursue all available remedies for failure to obtain this written notice.
   b. The CONSULTANT certifies to the best of its knowledge and belief, that it and its principals:
      (1) Are not currently debarred, suspended, proposed for debarment, declared ineligible, or voluntarily excluded from covered transactions by the DEPARTMENT, under Chapter Trans 504 Wis. Admin. Code or any federal department or agency;
      (2) Have not within a three-year period preceding this proposal been convicted of or had a civil judgment rendered against them for commission of fraud or a criminal offense in connection with obtaining, attempting to obtain, or performing a public (Federal, State, or Local) transaction or contract under a public transaction; violation of federal or state antitrust statutes or commission of embezzlement, theft, forgery, bribery, falsification or destruction of records, making false statements, or receiving stolen property.

(3) Are not currently indicted for or otherwise criminally or civilly charged by a governmental entity (Federal, State or Local) with commission of any of the offenses enumerated in section (V)(L)(1)(b)(2) above; and
(4) Have not within a three-year period preceding this proposal had one or more public transactions (Federal, State, or Local) terminated for cause or default.

M. Certification Regarding Debarment, Suspension, and Other Responsibility Matters-Primary Covered Transactions
   1. Certify that all grantees or subcontractors, also known as lower tier participants as that term is used in 49CFR Part 29 have certified in writing that neither they nor their principals are currently debarred, suspended or proposed for debarment, have been declared ineligible or have voluntarily been excluded from participation in this or any other Federal, State or local transaction by any Federal, State or local department agency or official.

N. Insurance Requirements
   1. Maintain the following types and limits of commercial insurance in force until such time as all SERVICES under or incidentals to the CONTRACT have been completed.
      (See Insurance Table, VI Attachment A)
   2. Furnish an Insurance Certificate, (or Certificates) showing the CONSULTANT is covered by the required types and amounts of insurance to the DEPARTMENT prior to the performance of any SERVICES under this CONTRACT.
   3. A 60 day notice of cancellation or change in coverage will be required. All coverage shall be placed with insurance companies licensed to do business in the State of Wisconsin with an A.M. Best rating of A - or better. The DEPARTMENT reserves the right to require other coverage and limits as described in the Special Provisions of this CONTRACT.
   4. The insurance requirements shall apply with equal force whether the SERVICES under this CONTRACT is performed by the CONSULTANT, a subcontractor of the CONSULTANT, or by any entity employed directly or indirectly by either party.
   5. Exceptions to the insurance requirements require approval from the DEPARTMENT. The approval must be reflected in the Special Provisions of the CONTRACT.

O. Choice of Law and Sovereign Immunity
   1. The CONTRACT shall be governed, construed, and enforced in accordance with the laws of the State of Wisconsin.
   2. Nothing in this CONTRACT shall be deemed as a waiver of the State's sovereign immunity consistent with Wisconsin law.
   3. Non-Appropriation of Funds. With respect to any payment required to be made by DEPARTMENT under this CONTRACT, the parties acknowledge DEPARTMENT'S authority to make such payment is contingent upon appropriation of funds and required legislative approval sufficient for such purpose by the Legislature. If such funds are not so appropriated, either CONSULTANT or DEPARTMENT may terminate this CONTRACT after providing not less than thirty (30) days notice to the other party.

P. Choice of Forum
   1. Any dispute arising out of or related to this CONTRACT shall be brought solely and exclusively in front of the State and Federal courts of Dane County, Wisconsin.

Q. Entire Agreement
   1. This CONTRACT and its attachments contain the entire agreement of the parties and supersede any and all prior agreements or oral understandings between the parties.

R. Severability
   1. The invalidity or unenforceability of any provisions of this CONTRACT shall not affect the validity or enforceability of any other provision of this CONTRACT, which shall remain in full force and effect.

VI. Attachment A. Insurance Table

Type of Insurance	Minimum Limits required *
(a) Commercial General Liability Insurance; shall be endorsed to include completed operations and blanket contractual liability coverage.	$1 Million Combined Single Limits per Occurrence, may be subject to an Annual Aggregate Limit of not less than $2 Million.
(b) Worker's Compensation and Employer's Liability Insurance	Worker's Compensation: Statutory Limits Employer's Liability: Bodily Injury by Accident - $100,000 Each Accident Bodily Injury by Disease $500,000 Each Accident $100,000 Each Employee
(c) Commercial Automobile Liability Insurance; shall cover all CONSULTANT owned, non-owned and hired vehicles used in carrying out the contract.	$1 Million - Combined Single Limits per occurrence
(d) Architect [*sic*] and Engineer [*sic*] Professional Liability Insurance **	$1 Million - Each Claim, may be subject to an Annual Aggregate Limit of $1 Million

** These requirements may be satisfied either through primary insurance coverage or through excess/umbrella insurance policies.*
***This insurance requirement applies only to engineering services and is waived for non-engineering services. Engineering services are defined as project management, construction management and inspection, feasibility studies, preliminary engineering, design engineering, surveying mapping and architectural related services.*

Attachment B. Special Provisions

Insert Special Provisions

ID VOJ 1814.001
Main Street Roundabout
STH 60
Village of Jackson
Washington County

VI. SPECIAL PROVISIONS

Substitute MUNICIPALITY for the DEPARTMENT in the Two-Party Design Engineering Standard Provisions.

SCOPE OF SERVICES

A. DESIGN REPORTS

(1) Request for Exceptions to Design Standards:

A Request for Exceptions to Design Standards are NOT PART OF THIS CONTRACT and are considered extra services, if required.

(2) Encroachment Report:

Submit an encroachment report electronically documenting private encroachments on public R/W.

(3) Design Study Report:

The CONSULTANT will prepare a Modernization Design Study Report (DSR) as per 11-4-10 of the MANUAL.

Roadside Hazard Analysis (RHA) is NOT PART OF THIS PROJECT and will be considered extra services, if required.

(4) Request for Design Justifications:

A separate design justifications report is NOT PART OF THIS CONTRACT and is considered extra services, if required. Any Design Justifications needed based on the Department S-1 design criteria will be documented in the DSR.

(5) Transportation Management Plan (TMP):

The CONSULTANT will prepare a 50% and 90% Type 2 Transportation Management Plan (TMP) as directed by the DEPARTMENT. The 50% and 90% TMP will be prepared and submitted electronically thru the WisTransPortal System.

The 50% and 90% TMPs will include any required delay analysis, alternative staging costs, staging concepts/plans, the PIOP checklist and the TOP checklist.

(6) Drainage & Storm Water Summary Report:

Drainage & Storm Water Summary Report is NOT PART OF THIS CONTRACT and is considered extra services, if required.

(7) Pavement Design Report:

Submit a pavement design report (PDR) as per the Manual.

(8) Complete Streets Report (CSD):

a. The CONSULTANT will update the CSD from ID 2310-13-00.

B. ENVIRONMENTAL DOCUMENTATION

Execute a disclosure statement as required by 40 CFR 1506.5(c).

Prepare an independent Categorical Exclusion Checklist (CEC) for the PROJECT as specified in the MANUAL and Chapter TRANS 400, Wisconsin Administrative Code. Furnish the required number to the DEPARTMENT for approval.

Prepare an environmental document that evaluates reasonable alternatives to the PROJECT and consider other reasonable actions or activities that may achieve the same or similar goals of the proposed highway PROJECT, including other or additional transportation alternatives and intermodal opportunities and the alternative of taking no action. Evaluate alternative courses of action based upon a balanced consideration of the environment, public comments, and the need for safe and efficient transportation consistent with local, state, and national environmental goals. Prepare environmental documents that are concise and emphasize significant environmental issues and plausible alternatives. Comply with requirements specified in the MANUAL and TRANS 400, Wisconsin Administrative Code. In the event of a conflict between the MANUAL and TRANS 400, Wisconsin Administrative Code, the administrative rule supersedes.

(1) Environmental Assessments:

Environmental Assessments are NOT PART OF THIS CONTRACT and are considered extra services, if required.

(2) Environmental Impact Statements:

Environmental Impact Statements are NOT PART OF THIS CONTRACT and are considered extra services, if required.

(3) Agricultural Impact Notice:

An Agricultural Impact Notice is NOT PART OF THIS CONTRACT and is considered extra services, if required.

(4) Section 4(f) Evaluation:

Section 4(f) Evaluation is NOT PART OF THIS CONTRACT and is considered extra services, if required.

(5) Section 6(f) Evaluation:

A Section 6(f) Evaluation is NOT PART OF THIS CONTRACT and is considered extra services, if required.

(6) Historical and Archaeological Surveys and Studies:

(a) The CONSULTANT shall update background and archival research from ID 2310-13-00. CONSULTANT shall update the architecture/history survey of properties that may be directly or indirectly affected by the project in accordance with the Wisconsin Historical Society's Survey Manual.

(7) Noise Analysis:

A Noise Analysis is NOT PART OF THIS CONTRACT and is considered extra services, if required.

(8) Air Quality:

An Air Analysis is NOT PART OF THIS CONTRACT and is considered extra services, if required.

(9) Hazardous Materials/Contamination Assessments:

(a) Hazardous Materials/Contamination Phase 1 Assessment is NOT PART OF THIS CONTRACT and is considered extra services, if required. The DEPARTMENT will prepare and complete the Phase 1 Assessment.

(b) Submit a Phase 2.5 assessment as per the MANUAL. CONSULTANT shall prepare necessary Special Provisions for Construction Proposal and Bid purposes as per the MANUAL in addition to the following:
1. Coordination and correspondence with WisDOT and WDNR personnel
2. Coordinate Special Provisions with WisDOT
3. Develop Engineer's Estimate for hazardous materials Contract Bid Items

(10) Preparation of the following Environmental Document Factor Sheets are NOT PART OF THIS CONTRACT and are considered extra services, if needed:

(a) General Economics Evaluation
(b) Business Evaluation
(c) Community or residential evaluation
(d) Environmental Justice Evaluation
(e) Archaeological sites Evaluation
(f) Tribal Coordination/Consultation
(g) Aesthetics Evaluation

(h) Wetlands Evaluation
(i) Rivers, Streams and Floodplains Evaluation
(j) Lakes and other open water evaluation
(k) Coastal Zones Evaluation
(l) Groundwater, wells, and springs evaluation
(m) Construction Stage sound quality evaluation
(n) Indirect or Cumulative Effects Evaluation

C. AGENCY COORDINATION

(1) Section 401 and 402 Certifications:

The DEPARTMENT has completed WDNR coordination and has obtained low impact final WDNR concurrence and water quality certification for the PROJECT. Evaluation of the effects of the PROJECT on water quality, in accordance with the provisions of the Clean Water Act and Chapter TRANS 400, Wisconsin Administrative Code and the MANUAL is NOT PART OF THIS CONTRACT and is considered extra services, if required.

(2) Section 404 Permits:

Prepare and submit Section 404 Permit to WisDOT and USACE as per the Manual.

(3) Storm Water Permits:

Preparation/coordination of Storm Water Permits are NOT PART OF THIS CONTRACT and are considered extra services, if required.

(4) Section 9 and 10 Permits:

Preparation/coordination of Section 9 and 10 Permits are NOT PART OF THIS CONTRACT and are considered extra services, if required.

(5) Wisconsin Department of Natural Resources (WDNR) Coordination:

The CONSULTANT shall coordinate with WDNR and shall provide plan information at 60% Plan and Final PS&E design stages as per the MANUAL.

(5) United States Fish and Wildlife Service (USFWS):

Preparation of Informal Section 7 Consultation is part of the contract. Additional meetings and Formal Section 7 Consultation and will be considered extra services, if required.

(6) Bureau of Aeronautics (BOA) and Federal Aviation Administration (FAA):

Coordination with BOA and FAA as per the MANUAL and utilize the FAA Notice Criteria Tool is NOT PART OF THIS CONTRACT and is considered extra services, if required.

D. RAILROAD/ UTILITY INVOLVEMENTS

(1) Preparation of notifications for railroads is NOT PART OF THIS CONTRACT and is considered extra services, if required.

(2) Preparation of statements and/or documentation for the DEPARTMENT to coordinate project details with both railroad companies or to present testimony at proceedings before the Office of the Commissioner of Transportation, attendance at OCR proceedings is NOT PART OF THIS CONTRACT and is considered extra services, if required.

(2) Utility Coordination

Perform all utility coordination in accordance with:

(a) The MANUAL
(b) TRANS 220
(c) The WisDOT "Guide to Utility Coordination"

(3) The CONSULTANT shall develop a list of known utilities on the PROJECT and a list of contact personnel for utility coordination.

(4) Confer on an ongoing basis with all utility facility owners in the project vicinity to establish mutual understanding on design features of the project affecting utility facilities and shall keep the MUNICIPALITY and DEPARTMENT informed of all such coordination activities.

(5) Update TUMS with required information.

E. PUBLIC INVOLVEMENT

(1) Public Involvement Meetings:

(a) Conduct or assist the DEPARTMENT in holding one (1) virtual public involvement meeting (PIM) to explain to the public concepts and potential impacts of this PROJECT.

(b) Prepare all exhibits and supplementary material and provide the equipment necessary to conduct the PIM.

(c) Prepare a summary report after the PIM.

(d) Discuss with the MUNICIPALITY and the DEPARTMENT the comments received and recommend the possible disposition of these comments and suggestions after the PIM.

(e) Make all the necessary arrangements for scheduling the PIM and provide notices.

(f) Provide the MUNICIPALITY and the DEPARTMENT with copies of all public involvement correspondence and file notes.

(g) Coordinate meeting schedules with the MUNICIPALITY's and the DEPARTMENT'S region representative.

(h) Multi-lingual interpretation services are NOT PART OF THIS CONTRACT and are considered extra services, if required.

(i) Prepare an initial Public Involvement Plan (PIP) and a 60% PIP for MUNICIPALITY approval.

(2) Formal Public Hearing:

Conducting a Formal Public Hearing is NOT PART OF THIS CONTRACT and is considered extra services, if required.

(3) Open Forum Public Hearing:

Conducting an Open Formal Public Hearing is NOT PART OF THE CONTRACT and will be considered extra services, if required.

(4) Project Mailings, Newsletters

Prepare a database for project mailings, newsletters/PIM invite, or any contact lists.

Preparation and mailing of one (1) design newsletter/PIM invite in single page, double-sided 8 ½" x 11" format (folded) as an invitation to the PIM.

F. MEETINGS

(1) One (1) meeting shall be held with MUNICIPALITY officials approximately 2-4 weeks prior to the Public Involvement Meeting (PIM).

(2) Attend one (1) Final Plan Virtual Review (Draft PS&E) Meeting with the Region approximately 45 - 60 days ahead of the P.S. & E. submittal date.

(3) Attend one (1) virtual pre-construction conference as scheduled by the DEPARTMENT.

(4) Four (4) meetings shall be held to plan, review, and coordinate the PROJECT with the MUNICIPALITY.

(5) Utility coordination meeting with utilities having facilities on the PROJECT is NOT PART OF THIS CONTRACT and is considered extra services, if required.

(6) Conduct one (1) 60% Plan Virtual Review meeting with the MUNICIPALITY and the DEPARTMENT. The DEPARTMENT'S Region staff will send the invitation.

(7) Attend up to two (2) property owner meetings with the MUNICIPALITY. The MUNICIPALITY will send the invitation.

(8) Conduct two (2) field review meetings.

(9) Attend a 50% Virtual TMP review meeting with the Region's PM and Traffic personnel.

(10) Attending railroad review meeting is NOT PART OF THIS CONTRACT and is considered extra services, if required.

(11) Attendance at an OCR Hearing is NOT PART OF THIS CONTRACT and is considered extra services, if required.

(12) A meeting with the Region Technical Services Soils Engineer to coordinate soils and sub-surface investigation work efforts is NOT PART OF THIS CONTRACT and is considered extra services, if required.

(13) A 30% Plan Review meeting with the MUNICIPALITY and the DEPARTMENT is NOT PART OF THIS CONTRACT and is considered extra services, if required.

G. LOCATING

Locating is NOT PART OF THIS CONTRACT and is considered extra services, if required.

H. SURVEYS

(1) GENERAL

(a) The CONSULTANT shall provide supplemental survey of LiDAR survey furnished by the DEPARTMENT under Project ID 2310-13-00 as needed.

(b) All work to be performed in and referenced to NAD 83 (2011), NAVD 88 (2012), Geoid Model (12A) in Wisconsin Coordinate Reference System (WISCRS) Washington County Zone, US Survey Feet.

(c) The CONSULTANT shall keep track of all interim deliverables and subsequent revisions and provide a final complete set of deliverables at the conclusion of the work order.

(d) For all file names below, Road name = STH 60 & Proj ID = TBD (assumed 2310-13-01 until established by State/Municipal Agreement

(e) Metadata-STH 60_ Proj ID TBD = To be determined.docx

(f) All raw data collector files <u>and</u> office surveying software files created and used in the CONSULTANTS <u>normal</u> workflow under this contract. Said raw data collector files shall be in their native format as used onboard the data collector and contain raw GPS vectors and terrestrial surveying observation data. This may require simply copying the raw file off the data collector instead of using the onboard "export" routines which often strips these important details from the files (e.g. JOB, VCE, DAT, JXL).

(g) All files imported into the Survey Database. (e.g. TXT, CSV, LandXML, DWG)

(h) Civil 3D Survey Database "SD-STH 60_TBD_(DAAR)" (includes .sdbx .sdxx .sdbx.info & .log files). The Civil 3D Survey Database is the main deliverable that the surface, topography and utility DWG's will be generated from. All edits done to survey data inserted to the associated DWG files shall be saved back to the Civil 3D Survey Database. The Civil 3D Survey Database should contain the corrected and latest version of the survey data. Change Reporting Logging shall be enabled in the Survey Database Settings to log the changes made after the initial files were imported into the survey database.

(i) Cntrl-GPS-Cal-Report-STH 60_TBD.pdf GPS Calibration/Localization report showing which points were calibrated to horizontally and vertically with residuals and coordinate system adjustments/translation values.

(j) Field Notes & Sketches in PDF format

(k) DWG files shall be in version 2020

(2) LIDAR

(a) The DEPARTMENT will provide LiDAR information along STH 181 centerline to the CONSULTANT for design and plat purposes. LiDAR survey is NOT PART OF THIS CONTRACT and is considered extra services, if required.

(3) HORIZONTAL & VERTICAL CONTROL

(a) The DEPARTMENT will provide available control point information to the CONSULTANT for design purposes.

(b) Setting 3D coordinates and FENO Markers is NOT PART OF THIS CONTRACT and is considered extra services, if required.

(c) Establishing Primary Control 3D coordinates on any existing vertically stable survey markers or convenient vertically stable manmade features within the project corridor is NOT PART OF THIS CONTRACT and is considered extra services, if required.

(d) Control point deliverables including Control-Primary-Datasheets NOT PART OF THIS CONTRACT and is considered extra services, if required.

(e) The CONSULTANT shall establish necessary temporary control for side road alignments not furnished by the DEPARTMENT for design purposes.

(f) The DEPARTMENT will furnish digital photos of each primary control point as described below.

(g) <u>Limits/Extents:</u>

1. STH 181 from 100' south of W. Florist Avenue to County Line Road and 150' east/west at all intersections, except 300' east/west at STH 100

(h) <u>Deliverables:</u>

1. The DEPARTMENT will furnish available control point data separated into four categories (as needed) in .DWG, .KMZ, .XML & .TXT (w/metadata header) file formats using the following naming convention:
   a. "Cntrl-Pri-STH 60_TBD.XXX" which includes existing NGS HMOD points the survey is based on, Feno Markers, Bridge Caps, & other permanent control intended to be shown on project plan sets
   b. "Cntrl-Second-STH 60_TBD.XXX" which are temporary control points such as mag nails, spikes, iron pipes, rebar etc.

c. Cntrl-Pri-Datasheets-STH 60_TBD.pdf (showing project coordinates for all primary control including NGS & HMOD stations used)
d. Cntrl-Dig-Level-Report-STH 60_TBD.pdf (if digital level used)
e. Cntrl-Optical-Level-Notes-STH 60_TBD.pdf (if optical level used)
f. Cntrl-Level-Route-STH 60_TBD.dwg & kmz (shows generalized routes of circuits/networks and connectivity of leveled control points and BM's. Individual routes/circuits correlating with field notes or digital data files should be differentiated in some manner by representing them as separate entities or colors or some other means)
g. Cntrl-Pt-Deriv-Report-STH 60_TBD.pdf Point derivation report for all primary control points surveyed indicating point averaging delta statistics, and source measurement (GPS or Terrestrial) in PDF format
h. Cntrl-GPS-Cal-Report-STH 60_TBD.pdf. GPS Calibration/Localization report showing which points were calibrated to horizontally and vertically with residuals and coordinate system adjustments/translation values.
i. Digital photos of each "primary" control point (one close up shot of monument cap and one overview of control point). Files shall utilize names matching subject point numbers or files with embedded geo-reference and method to view the files.
j. Digital photo showing the typical control point marker post label.

(4) SECTION CORNER SURVEY

(a) CONSULTANT shall survey the location of an estimated four (4) Public Land Survey System (PLSS) corners to support the determination of existing property lines, existing and proposed right of way and project alignments.
(b) The CONSULTANT shall use WisDOT point numbering conventions and point description codes.
(c) The CONSULTANT shall obtain digital photos of each corner surveyed.
(d) <u>Limits/Extents:</u>
a. An estimated four (4) section corners in the project area sufficient for framing anticipated R/W parcels for plat development purposes.
(e) <u>Deliverables:</u>
a. SEC-STH 60_TBD.dwg, .TXT w/metadata header, .KMZ, & .XML formats.
b. SEC-Deriv-Report-STH 60_TBD.pdf Point derivation report for all section corners surveyed indicating point averaging delta statistics, and source measurement (GPS or Terrestrial) in PDF format.
c. Digital copies of all Dossier sheets obtained
d. Digital photos of each corner. (one close up and one overview looking north) Files shall utilize names matching subject point numbers or files with embedded geo-reference and method to view the files.

(5) PROPERTY CORNER SEARCH

(a) CONSULTANT shall search for and survey the location of any property corners found to support the determination of existing property lines, existing and proposed right of way and project alignments.

(b) The CONSULTANT is NOT expected to reset or establish any missing corners.
(c) The CONSULTANT will provide GIS parcel mapping for the project area.
(d) The CONSULTANT will acquire subdivision plats, CSM's, and plat of surveys within the project area.
(e) The CONSULTANT shall obtain existing WisDOT right of way plat information.
(f) The CONSULTANT shall use WisDOT point description codes.
(g) Limits/Extents:
    1. Intersection of STH 60 and Eagle Drive, 500' in each direction
(i) Deliverables:
    1. IP-STH 60_TBD.dwg, .TXT w/metadata header, .KMZ, & .XML formats.
    2. Digital copies of all Subdivision Plats, R/W Plats, CSM's, Surveys, GIS maps associated with the project.
    3. Any maps marked up with property corners found.

(6) APPRAISAL STAKING OF RIGHT OF WAY & EASEMENTS

(a) The CONSULTANT shall stake two (2) existing and proposed right of way and easements for viewing and use by appraisers and property owners.
(b) The CONSULTANT shall provide field surveyed locations of encroachments as requested by the DEPARTMENT and any previously unknown encroachments that become known during the field staking.
(c) The CONSULTANT shall provide an Encroachment Reporting Form and provide digital pictures of the encroachment.
(d) The DEPARTMENT will provide digital data and hard copies of the subject right of way plat or TPP to the CONSULTANT along with coordinates and Civil 3D files to facilitate setting the points in the field.
(e) Limits/Extents: Limits/Extents:
    1. Two (2) parcels as shown on traditional plat at STH 60/Eagle Drive Intersection
(f) Deliverables:
    1. Highlighted copy of appraisal plat using the colors shown below:
        a. **Pink = PRW** (proposed RW)
        b. Blue = TLE (Temporary Limited Easement)
        c. Yellow = RW (Existing RW)
        d. Blue/**Pink** = PLE (Permanent Limited Easement)
    2. Individual LandXML files of PRW, TLE, RW, PLE, and all alignments used for any station/offset reference on plat
    3. Individual LandXML file containing Section Corners, Control Points staking is based on.
    4. Google KMZ of plat points (PRW, TLE, RW, PLE) with point numbers and description/code displayed in appropriate color (see above)
    5. "As-staked" appraisal plat showing dates of appraisal staking (on each sheet) and types of marks placed
    6. Civil 3D dwg file showing any encroachments located.
    7. Completed Encroachment Reporting Forms in PDF format.
    8. Photos of any encroachments

(7) FINAL MONUMENTATION OF RIGHT OF WAY & EASEMENTS

(a) The CONSULTANT shall set required right of way monuments/rebar at two (2) permanent parcel locations as directed by the MUNICIPALITY.
(b) The CONSULTANT shall coordinate with DEPARTMENT Plat or Survey Coordinator to ensure proper control and datums/adjustments are used.
(c) The CONSULTANT shall supply all required rebar, rebar caps, R/W posts, R/W signs meeting MUNICIPALITY standards.
(d) Limits/Extents:
    1. Two (2) parcels as shown on the plat.
(e) Deliverables:
    1. Digital copy of Acquisition Exhibits marked up with notes showing points staked, type of monument used, dates of staking and location of R/W. If an existing monument is found, then provide the type of monument (pipe, rebar, chiseled X, etc.), material, size, distance and direction from the proposed location.
    2. Individual LandXML files of PRW, RW, PLE, and all alignments used for any station/offset reference on plat
    3. Google KMZ of final staking plat points with point numbers and description/code displayed.

(8) ALIGNMENTS (EXISTING)

(a) The CONSULTANT shall establish existing alignments for the side road segments based on previous plan alignments, pavement splits, reference line monuments, section corners, property corners found and any other pertinent evidence.
(b) The CONSULTANT shall obtain field evidence beyond the extents of the alignments as needed to support the establishment of accurate alignments.
(c) The CONSULTANT shall obtain subdivision plats, CSM, plats of survey within the project area.
(d) The MUNICIPALITY will provide existing WisDOT right of way plat information.
(e) The CONSULTANT shall prepare a station and offset report for each alignment showing the relationship of the alignment to adjacent evidence considered in establishing the alignment which is sorted by station values.
(f) The CONSULTANT shall make notes on utilized source documents and in working CAD files which will be delivered to the DEPARTMENT.
(g) Limits/Extents:
    1. Eagle Drive 500’ in each direction.

(9) WEAK & OBSCURED AREAS

(a) The CONSULTANT shall perform supplemental survey of select weak and obscure areas of furnished aerial mapping under ID 2310-13-00 identified as needed during design efforts.
(b) The supplemental survey shall provide enough detail including any necessary break lines to accurately depict drainage in those areas and facilitate fusing the supplemental survey with the surface developed from the aerial mapping.
(c) The CONSULTANT shall be responsible for fusing the supplemental survey data with the aerial mapping derived surface to produce a seamless accurate Civil 3D surface file.

(d) The CONSULTANT shall provide a separate DWG file containing a Civil 3D surface of just the area the CONSULTANT surveyed and created before any data fusing.
(e) The CONSULTANT shall provide a surface data source drawing with line work depicting the boundaries between areas acquired by different field survey data collection methods (Total Station, GPS, Total Station & GPS, Static LiDAR, Mobile LiDAR, Aerial LiDAR, and Aerial Photogrammetry, etc.). The individual areas need to be clearly labeled so the user can easily identify the responsible firm name, date of survey, Work Order Number, and technology used to develop the surface information throughout the entire project. If no fusion was done, only areas of work done by the CONSULTANT need to be delineated.
(f) Limits/Extents:
    1. Eagle Drive 500' in each direction.
(g) Deliverables:
    1. Surf-Ex-STH 60_TBD.dwg (final fused data)
    2. Surf-Ex-Basis-DAAR-STH 60_TBD.dwg
    3. Surf-Data-Source-STH 60_TBD.dwg

(10) TOPO/DTM (INCLUDING METHODS OF COLLECTION)

(a) CONSULTANT to perform horizontal Topo/DTM survey to supplement survey data under ID 2310-13-00
(b) The CONSULTANT shall fuse horizontal joints survey with the aerial mapping.
(c) The CONSULTANT shall provide a data source drawing with line work depicting the boundaries of joint surveys by field survey data collection method utilized (GPS). The individual areas need to be clearly labeled so the user can easily identify the responsible firm name, date of survey, and technology used (GPS) to develop the survey information. Only areas of work done by the CONSULTANT need to be delineated.
(d) The CONSULTANT will provide a separate DWG file containing all of the elements that were used to build the surface. The elements included in this DWG file are the basis of the existing surface and should include (but not limited to) all points, figures, break lines, 3D polylines, and point groups that were used to build the surface. Note that figures are preferred over break lines or 3D polylines. Any custom point groups you created to control the importation of data should be added to the "prospector" tab in the DWG. The resultant Civil 3D surface should also be in this DWG file.
(e) Limits/Extents:
    1. Eagle Drive 500' in each direction.
(f) Deliverables:
    1. Topo-Ex-STH 60_TBD.dwg

(11) UTILITY SURVEY

(a) Collect all overhead and underground utilities within the utility survey limits. Utilities include but are not limited to; Gas, Telephone, Communications, Cable TV, Fiber Optic, Electric, Water, Sanitary Sewer, Sanitary Force Mains, Storm Sewer, Storm Sewer Pipe Outfalls, Traffic Signal Facilities, FTMS/ITS facilities.

(b) All utilities shall be represented by unique connecting line work representing the facilities and utility structures such as manhole, inlets, pull boxes, poles, pedestals, valves, vent pipes, transformers etc. shall be obtained and shown.
(c) The CONSULTANT shall submit both field locate and prints tickets to Diggers Hotline.
(d) The CONSULTANT shall however make one (1) additional attempt to contact each utility that did not respond to the prints ticket request to obtain system maps.
(e) The CONSULTANT shall insert the following language into the "Remarks" section of the Diggers Hotline Field Locate tickets submitted.
(f) AN AGENT OF WISDOT WILL TAKE PHOTOS OF REQUESTED AREA AFTER START DATE. IF FACILITIES ARE NOT MARKED AS REQUIRED IN SS 182.0175. WISDOT MAY PURSUE IMPOSING PENALTIES AS ALLOWED IN SS 182.0175(3).
(g) The CONSULTANT shall insert the following language into the "Remarks" section of the Diggers Hotline Prints tickets submitted.
(h) THE CALLER AS AGENT FOR WIDOT WILL REPORT LACK OF RESPONSE TO WIDOT IF MAPPING IS NOT PROVIDED AS REQUIRED IN SS 182.0175. WIDOT MAY PURSUE IMPOSING PENALTIES AS ALLOWED IN SS 182.0175(3).
(i) If any utilities are not marked and surveyed in the field, those utilities shall be shown in a separate Uti-APPROX-STH 60_TBD.dwg as depicted in the utility system maps provided by the utilities.
(j) The CONSULTANT shall list all utilities that did not supply system maps in a note in the Uti-APPROX.dwg.
(k) Said Uti-APPROX dwg shall be suitable for overlaying with other project base mapping and field located utility dwgs to represent the approximate location of the utilities not marked or surveyed but shown on the maps provided by the utilities.
(l) The CONSULTANT shall take digital photos and/or video of the entire area described in the Utility Survey Limits/Extents shortly after the Ticket Start Date & Time (Clear Date).
(m) The intent is to be able to document the utilities marked and not marked within the requested limits shortly after the clear date on the ticket. So photograph or video areas with no marks too, especially area known to contain utilities that are not marked.
(n) Photos and video files shall be clearly named or organized to reference each individual Ticket # or logical sub areas.
(o) Photos and video shall also show on the image/video the date and time the image/video was captured.
(p) The images/videos shall be taken/labeled/narrated or indexed such that the viewer will be able to determine the location and direction of the photographs and video.
(q) All digital photos and videos shall be delivered on a USB 3.X external hard drive that will become the permanent property of the DEPARTMENT.
(r) The CONSULTANT shall complete a WisDOT Diggers Hotline Ticket Assessment form for this work order. This form will assist in assessing the quality of the response received from the utility company and their locators.
(s) The DEPARTMENT will provide the blank WisDOT Diggers Hotline Ticket Assessment template spreadsheet to be used.
(t) Storm & Sanitary Sewer "Measure Downs" are NOT PART OF THIS CONTRACT and are considered extra work, if required.
(u) Limits/Extents:

1. Eagle Drive 500’ in each direction and 10’ beyond existing R/W

(v) Deliverables:

1. Uti-STH 60_TBD.dwg
2. Uti-APPROX-STH 60_TBD.dwg
3. Digital copies of utility system maps
4. Digital copies of Diggers Hotline tickets.
5. Digital photos (.jpg) and/or video (.wmv) of the entire area described in the Utility Survey Limits/Extents with associated indexing system.
6. WisDOT Diggers Hotline Ticket Assessment Form spreadsheet.

(12) STORM SEWER SURVEY

Storm sewer survey is NOT PART OF THIS CONTRACT and is considered extra services, if required.

(13) CULVERT SURVEY

Culvert survey is part of this CONTRACT.

(14) SANITARY SEWER SURVEY

Sanitary sewer survey is NOT PART OF THIS CONTRACT and is considered extra services, if required.

(15) MISCELLANEOUS FACILITIES-WELLS-SEPTIC SURVEY

Miscellaneous facilities survey is NOT PART OF THIS CONTRACT and is considered extra services, if required.

(16) REHABILITATION STRUCTURE SURVEY

Rehabilitation structure survey is NOT PART OF THIS CONTRACT and is considered extra services, if required.

(17) STREAM CROSSING STRUCTURE SURVEY

Stream crossing structure survey is NOT PART OF THIS CONTRACT and is considered extra services, if required.

(18) AERIAL MAPPING TARGET SURVEY

Aerial mapping target survey is NOT PART OF THIS CONTRACT and is considered extra services, if required.

I. SOILS AND SUBSURFACE INVESTIGATIONS

Soils and subsurface investigations are part of the CONTRACT and shall comply with the MANUAL.

J. ROAD PLANS

Section II C (7) in the Standard Provision of the CONTRACT is amended to include the following plans:

(1) Title Sheet
(2) General Notes & Contacts
(3) Project Overview - Single Sheet Schematic Drawing
(4) Typical Sections
(5) Construction Details
    a) Including (10 scale) detailed designs for an estimated eight (8) curb ramps
(6) Removal Plan
(7) Erosion Control
(8) Existing/Permanent Signing
(9) Pavement Marking Plan
(10) Traffic Control/Stage Construction
    a) Including pedestrian detour(s) and temporary ramp accommodations
(11) Alignment Plan
(12) Miscellaneous Quantities
(13) Traditional Plat (2 parcels)
(14) Plan & Profile
(15) Computer Earthwork Data
(16) Cross-sections
(17) Wetland Mitigation Plan – not included and considered extra services, if needed.
(18) Waste Disposal Plan – not included and considered extra services, if needed.
(19) Landscaping Plan – not included and considered extra services, if needed.
(20) Storm Sewer Plan – not included and considered extra services, if needed.

K. STRUCTURE PLANS

(1) Prepare Structure Survey Reports in accordance with the MANUAL. Completed preliminary plans shall show the structure plan, elevation, and typical cross section, and all pertinent data shall appear on the first sheet(s) of the completed structure plans. The DEPARTMENT will review preliminary structure plans and Structure Survey Reports showing requested revisions, if any.

(2) Plans for Structures shall be fully dimensioned besides showing controlling elevations. The plans shall be prepared with such precision and detail to allow for layout in the field with customary degree of accuracy and to allow for the production of an accurate estimate of quantities for all pertinent items of work to be performed in the PROJECT.

(3) Plans for Structures shall include schedules for bar steel reinforcement (if required). Such schedules shall provide all of the necessary detail required for the fabrication of the reinforcement without the necessity of making separate shop drawings for that purpose.

(4) When the plans for a structure have been completed, the CONSULTANT shall furnish the DEPARTMENT with electronic files of such plans for review and examination.

(5) Submit electronic copies for review and examination of all specifications for items of work in the Structure Plans which are not covered by the STANDARD SPECIFICATIONS and such amendments to, or revisions of the STANDARD SPECIFICATIONS as may be required to properly cover the work contemplated by the plans.

(6) Prepare or check the shop drawings for the fabrication of structural steel.

(7) Plans will be subject to review and examination by the DEPARTMENT. Such review and examination may be made on the site of the PROJECT.

(8) Along with the plans for structures submit one copy or reproduction of the design computations for the DEPARTMENT'S review and permanent file.

(9) When the plans for structures are to be prepared by others, the DEPARTMENT and the CONSULTANT(S) shall provide each other with the necessary pertinent information to affect the proper correlation between the Road Plans and the Structure Plans.

(10) Furnish such other pertinent information and data with respect to the plans and design as the DEPARTMENT may request.

(11) Structure Survey Reports, Preliminary Plans and Final Plans shall be completed for MSE Retaining Wall.

L. PLANS, SPECIFICATIONS, & ESTIMATES (P.S. & E.)

(1) The CONSULTANT shall provide Highway Project Data in a digital format to the DEPARTMENT in accordance with the standards outlined in the FDM. All electronic project data must be delivered to the DEPARTMENT via e-mail or ftp transfer after Central Office completes a final PROJECT review prior to construction letting. All electronic project data must be accompanied by a meta-data document (format of meta-data provided by the DEPARTMENT) which describes all data which is delivered.

(2) Upon receipt of the electronic data files, a DEPARTMENT representative will process the data within 6 weeks and return to the CONSULTANT a notification confirming that the data was received and verified to be in the correct formats. If the data received is not correct, the CONSULTANT must rectify the problem and resubmit the data to the DEPARTMENT within 2 weeks of being notified of the problem. This confirmation notification does not certify that the CONSULTANT submitted electronic data matches the information that is shown on the paper plan, nor does it verify that the design is valid and follows design standards set the Facilities Development Manual. The confirmation notification in no way releases the CONSULTANT from responsibilities related to the constructability and validity of the design.

(3) The CONSULTANT shall provide field control information, including all data used to establish survey control in the field. At minimum, the data shall include all control points

and section corner points. Control points must have a feature code of CP and section corner points must have a feature code of SEC. In addition, other field control data may be required, this being at the discretion of the project manager. Other field control data must also be assigned a standard WisDOT feature code. The format of the file containing field control information shall be in accordance with the standards outlined in the FDM.

(4) The CONSULTANT shall provide reference line information, including all mainline and side road reference lines and the project control necessary to establish such reference lines. All proposed alignments must be assigned a feature code of PRL and all existing alignments must be assigned a feature code of CL. In addition, for each alignment a report of the alignment/reference line details (bearings, curve data, etc.) shall be provided. The format of this report is provided in the FDM. The format of the file containing reference line information shall be in accordance with the standards outlined in the FDM.

(5) The CONSULTANT shall provide data necessary for the preparation of plats and acquisition of rights of way and property, including all existing and proposed right-of-way chains and points to be staked. The format of the file containing right-of-way monumentation information shall be in accordance with the standards outlined in the FDM.

(6) The CONSULTANT is not required to provide mainline profile information, which includes profiles of any reference lines, as mainline profile development is considered extra services, if needed.

(7) The CONSULTANT shall provide design profile information of modified driveway profiles and modified ditch profiles. The format of the file containing profile information shall be in accordance with the standards outlined in the FDM. driveway profiles and any necessary ditch profiles,

(8) The CONSULTANT shall provide existing cross section data for the project. At a minimum, the existing ground surface, the finished ground surface outside the subgrade shoulder points and the finished ground surface between the subgrade shoulder points must be provided with the information for each surface being placed in its own file. Names of the surfaces in all cross section files must follow those standards set in the WisDOT standard feature table. The format of the file containing existing cross section data shall be in accordance with the standards outlined in the FDM.

(9) The CONSULTANT is not required to provide information on the locations of the superelevation transition points along alignments.

(10) The CONSULTANT shall provide existing topographic data which is classified as utility information. WisDOT standard feature codes and point connectivity methods must be used in the data files submitted. The format of the topographic data shall be in accordance with the standards outlined in the MANUAL.

(11) The CONSULTANT shall provide existing topographic data which is classified as other than utility information. WisDOT standard feature codes and point connectivity

methods must be used in the data files submitted. The format of the topographic data shall be in accordance with the standards outlined in the FDM.

(12) The CONSULTANT shall provide other Survey Information, as deemed necessary by the WisDOT Project Manager. The format of the miscellaneous survey information shall be in accordance with the standards outlined in the FDM.

(13) The CONSULTANT shall provide graphical data files for the complete plan set. All graphical files shall be in accordance with the data exchange and CADDS standards outlined in the FDM.

M. PLATS

(1) Prepare right-of-way plats for the PROJECT in accordance with the MANUALS and WisDOT Guide to Utility Coordination. Transportation project plats (TPP) shall also be prepared in accordance with Wisconsin Statute 84.095.

(a) Prepare each plat sheet showing coordinates on all United States Public Land Survey System (USPLSS) section corners, quarter section corners, meander corners, monumented sixteenth corners, private claim corners and on all main line and side road survey line/reference line PI's.

(b) Provide all coordinate information in Wisconsin Coordinate Reference System Coordinates (WISCRS) NAD 1983

(c) Prepare all plat sheets in accordance with FDM 15-5 Plan Preparations - Methods using WISDOT-provided Civil 3D file templates and related CAD components.

(d) Provide the DEPARTMENT an electronic *(choose: CSV or LandXML)* file with unique point ID's of all right-of-way points, permanent easement points, alignment PI's and USPLSS corners on the project.

(e) Provide the DEPARTMENT with an electronic report describing all elements within all alignments and an electronic XML file, for each alignment.

(f) Show all newly monumented, reestablished right-of-way and permanent easement points with the size and type noted (e.x. 3/4" I.P.) in accordance with the MANUALS.

(g) Show all recovered monuments with the size and type noted in accordance with the MANUALS.

(h) Show on the plat sheets existing access control or access covenants from previous DEPARTMENT projects, local projects, certified survey maps (CSM), subdivisions and title reports.

(i) Show on the TPP and plat sheets existing property lines along with CSM's, subdivisions, assessor plats, condominium plats and plats of survey and other surveys of record.

(j) Assign a note or table to each TPP and plat sheet stating the historical basis for dimensioning the existing highway right-of-way; include intersecting roads.

(k) Show the bearing and distance from a USPLSS corner along the section line to the adjacent quarter corner or section corner whenever the mainline reference line and the right-of-way lines cross a section line or quarter line. Note on the plat the monument type and coordinates of the section corners.

(l) Provide the DEPARTMENT with an electronic Coordinate Geometry (COGO) report of the exterior boundaries of the right-of-way as depicted on each TPP, right of way envelope or description, which specifies closure and precision of the traverse.

(m) Submit a final full size, 22" x 34" portable document format (PDF), unless otherwise specified by the county or DEPARTMENT, in accordance with the MANUALS upon final approval of the DEPARTMENT.

(n) Submit the plat PROJECT DOCUMENTS in accordance with the MANUALS upon receiving final approval from the DEPARTMENT. Submit Civil 3D dwg files in accordance with the data exchange and CADDS standards outlined in the MANUAL.

(2) Title Searches/Updates

Obtain title searches, title updates, or commitments necessary to determine property lines and current ownerships for the PROJECT. It is estimated that two (2) title searches and two (2) title updates are required. Contract with a title company to prepare the title searches, title updates, or commitments in accordance with the DEPARTMENT'S approved list of title companies. Provide a copy of the title searches, title updates, or commitments to the DEPARTMENT, upon request.

(3) Acquisition Descriptions

a) Traditional Plat:

Provide descriptions for all individual parcels of land and interests to be acquired for the PROJECT. Provide individual legal description(s) for each parcel and interest(s),

or an envelope description that does not cover more than one page of the plat. Write descriptions in a metes and bounds format, or in the case of platted property by suitable reference to the platted data. Commence or begin unplatted property descriptions at a monumented USPLSS corner. The legal descriptions shall contain a basis of reference and shall describe the exterior boundaries of, and the interest being acquired.

(4) Prepare the descriptions and relocation order, when applicable, using Microsoft Word or software compatible with the DEPARTMENT. Contact the DEPARTMENT'S real estate unit for current formatting instructions. The DEPARTMENT will be responsible for the recording of all descriptions and filing the relocation order with the applicable county.

(5) Provide relocation order, when applicable, preliminary plat and descriptions, excluding the recording information, in electronic format for DEPARTMENT review.

(6) Plat Revisions

a) Traditional Plat:

Be responsible for all revisions to the plat sheets and descriptions until the real estate certification is completed. Changes on the right-of-way plat that occur following the initial relocation order (excluding hardship or protective purchase) are anticipated and are part of this CONTRACT.

(7) Submit the traditional plat sheet electronically to the DEPARTMENT for approval. The DEPARTMENT will be responsible for the recording of all transportation project plats or filing the traditional plat with the applicable county.

(8) Supply the DEPARTMENT with a PDF file of the plan/profile and cross sections for the DEPARTMENT'S use in real estate acquisition at the time required in the project schedule.

N. ACQUISITION EXHIBITS

(1) Acquisition Exhibits are NOT PART OF THIS CONTRACT and are considered extra services, if required.

O. HIGHWAY SYSTEM CHANGES

Highway System Changes are NOT PART OF THIS CONTRACT and are considered extra services, if required.

P. TRAFFIC

(1) The CONSULTANT shall provide Plans, specifications, and estimates for the reconstruction of STH 60 intersection with Eagle Drive to a modern roundabout as per the MANUAL.

(2) All work will be performed according to Wisconsin Department of Transportation standards. All materials will be prepared to be inserted into the bid package to be prepared by the CONSULTANT.

(3) Design of intersection lighting is included in this scope of services.

(4) Design of any traffic signal and/or interconnect system, or any traffic signal timing or operational analysis is NOT PART OF THIS PROJECT and is considered extra services, if required.

Q. SERVICES PROVIDED BY THE MUNICIPALITY

The MUNICIPALITY will provide to the CONSULTANT the following for the PROJECT:

(1) As-built plans for the project roadway
(2) Culvert condition/inspection report (if available)
(3) Available plats and CSMs

R. DESIGN PC SPECIFICATIONS (for design staff working on an engineer's estimate)

Contracts with projects that have PS&E dates of February 1, 2019, and beyond, go to the AASHTOWare Project Knowledge Base web site https://awpkb.dot.wi.gov/Content/Default.htm for information about supported web browsers, how to obtain system access and how to use AASHTOWare Project Preconstruction and AASHTOWare Project Estimator to create an engineer's estimate.
(January 10, 2019)

S. PROSECUTION AND PROGRESS

(1) Monitor the progress of the PROJECT as stipulated in the contract agreement. The tracking process shall include providing the DEPARTMENT with an updated version of the project network on a monthly basis to show the progress of the project. The report can be delivered in electronic format consistent with current WisDOT standards.

(2) The CONSULTANT proposes to sublet these services:

(a) Roundabout engineering services to MSA Professional Services
(b) Updated Section 106 Report services to University of Wisconsin – Milwaukee, Cultural Resource Management (CRM).
(c) Title Reports and updates by Knight Barry Title Group
(d) Lighting engineering services to Powrtek Engineering, Inc.
(e) Soils investigations and Soils Report to Himalayan Consultants, LLC
(f) Parcel Appraisals to Metropolitan Appraisal
(g) Appraisal review services to Valbridge Property Advisors
(h) Phase 2.5 Hazardous Materials Assessment services to Ramboll

(3) The following items of work will be completed and submitted to the MUNICIPALITY and DEPARTMENT'S Region Office by the indicated dates if CONSULTANT has received the Notice to Proceed by May 23, 2022.

Report Title	Date
30% Roundabout Plan	June 27, 2022
LOM & PIM	July 2022
TMP (50%) sent	August 15, 2022
60% Plan sent	August 15, 2022
Complete Streets Report sent	August 15, 2022
Section 106 Report sent	August 15, 2022
Draft Environmental Document (CEC) sent	August 15, 2022
Slope Intercepts & Preliminary Plat sent	August 15, 2022
Preliminary Retaining Wall Plan sent	August 15, 2022
CEC approved	September 2, 2023
Design Study Report sent	September 2, 2023
Design Study Report approved	September 16, 2023
Final Plat sent	September 16, 2023
Encroachment Report sent	September 16, 2023
Final Plat approved	September 25, 2023
1078s sent	October 7, 2022
TMP (90%) sent	December 2022
Final Retaining Wall Plan sent	February 1, 2023
Draft PS&E (90%) sent	February 1, 2023
R/W Acquisition Complete	April 4, 2023
Final PS&E (eSubmit)	May 1, 2023
LET	9/12/2023
Preconstruction Conference	February 2024

Summary of Staff Hours and Direct Labor Costs

PROJECT TOTAL

Project ID: **VOJ 1814.001 Main Street RAB**

Activity Code	Classification	"X" As per Scoping	Design Project Manager		Design Engineer - High		Design Engineer-Mid		Design Engineer - Entry		Survey - High		Survey - Mid		Survey - Entry		Traffic Engineer - Mid		Administration/Clerical		Total Direct Labor	Total $
	Avg. Hourly Wage		$72.87		$55.14		$38.77		$30.75		$45.00		$40.50		$24.00		$46.41		$38.51			
	Task		Hours	Dollars	Hours	Dollars	Hours	Dollars	Hours	Dollars	Hours	Dollars	Hours	Dollars	Hours	Dollars	Hours	Dollars	Hours	Dollars	Hours	Dollars
	Project Management																					
	Scope, Schedule and Change Management																					
887	Manage Project Scope and Schedule		13	$947.31	6	$330.84	0	$0.00	0	$0.00	0	$0.00	0	$0.00	0	$0.00	0	$0.00	0	$0.00	19	$1,278.15
887.1	Create project schedule/Updates	X	1																			
887.2	Update and Track project progress/percent complete	X	2																			
887.3	Region phone calls, coordination & correspondense/emails	X	4																			
887.5	Prepare/attend 60% Plan review meeting (virtual)	X	2		2																	
887.6	Prepare/attend 90% Plan review meeting (virtual)	X	4		4																	
773	Manage Consultant Contract		10	$728.70	0	$0.00	0	$0.00	0	$0.00	0	$0.00	0	$0.00	0	$0.00	0	$0.00	10	$385.10	20	$1,113.80
773.1	Prepare consultant invoice and supporting documents	X	4																10			
773.2	Review Subconsultant invoices	X	4																			
	Communication and Stakeholder Management																					
743	Manage Project Stakeholders		14	$1,020.18	4	$220.56	0	$0.00	0	$0.00	0	$0.00	0	$0.00	0	$0.00	0	$0.00	17	$654.67	35	$ 1,895.41
743.1	Respond to inquiries (public, government, media)	X	2																			
743.2	Develop public involvement plan	X	0.5																2			
743.3	Prepare and maintain public involvement log/comment database	X	0.5																2			
743.4	Notify property owners/Letters/Mailing	X	0.5																2			
743.5	Pre-meeting (PIM PAC TAC)																					
743.5.1	Develop and maintain contact mailing list (email/address)	X																	1			
743.5.2	Plan pre-meeting and meeting arrangements	X	1																			
743.5.5	Prepare/Review/Revise meeting materials (Exhibits, PP presentation) PIM & LOM (1 meeting each)	X	1																4			
743.5.6	Prepare & Attend PIM & LOM (1 meeting each)	X	4																4			
743.5.7	Prepare/Review PIM/LOM summaries	X	0.5																2			
743.6	General Project Meeting																					
743.6.1	Prepare for, attend, and summarize project update meetings (4)	X	4		4																	
893	Manage Project Communications	X	1.5	$109.31	0	$0.00	0	$0.00	16	$492.00	0	$0.00	0	$0.00	0	$0.00	0	$0.00	6	$231.06	23.5	$ 832.37
893.2	Develop project newsletter/coordinate comments	X	0.5																4			
	Preliminary and Final Design																					
	Pavement and Soils Design																					
208	Design Soils, PDR & Earthwork		0	$0.00	4	$220.56	0	$0.00	0	$0.00	0	$0.00	0	$0.00	0	$0.00	0	$0.00	0	$0.00	4	$220.56
208.1	Roadway																					
208.1.1	Review available geotechnical/develop Pavement Design Report	X			4																	
	Engineering and Plan Development																					
768	Design Erosion Control and Landscaping		0	$0.00	0	$0.00	0	$0.00	0	$0.00	0	$0.00	0	$0.00	0	$0.00	0	$0.00	0	$0.00	0	$0.00
768.2	Determine temporary erosion control features																					
768.3	Determine permanent erosion control features																					
776	Design Geometrics and Details		12.5	$910.88	32	$1,764.48	24	$930.48	244	$7,503.00	0	$0.00	0	$0.00	0	$0.00	12	$0.00	4	$154.04	328.5	$11,262.88
776.15	Field Site Visit	X	8				8															
776.24	Design Documentation																					
776.24.1	Develop Encroachment Report	X	0.5																4			
776.24.2	Complete Streets Report	X	4																			
776.24.3	Develop and document Design Study Report	X			2		16															
776.25	Plan Preparation																					
776.25.1	Title sheet Update (1 Sheet)	X			0.5				2													
776.25.2	General Notes Update (1 Sheet)	X			1				4													
776.25.3	Utility Contacts (1 Sheet)	X			1				4													
776.25.4	Project Overview (Update)	X			0.5				2													
776.25.5	ExisitngTypical Sections	X			2				8													
776.25.6	Finished Typical Sections	X			2				8													
776.25.7	General construction details	X			2				8													
776.25.8	Removal plan	X			2				8													
776.25.9	Curb ramp details (10 Scale - 8 Ramps)	X			4				80													
776.25.10	Paving grades	X			2				16													
776.25.11	Plan & Profile Sheet/Coordination & Review	X			1																	
776.25.12	Sidewalk/Path plan	X			2				16													
776.25.13	Erosion Control Plan	X			1				4													
776.25.14	Paving marking plan	X			2				8								4					
776.25.15	Signing Plan	X			2				8								8					
776.25.16	Alignment plan	X			0.5				2													
776.25.17	Survey Contol/Ties plan	X			0.5				2													
776.25.18	Cross sections	X			4				16													
786	Develop Quantities and Estimates		0	$0.00	7	$385.98	12	$465.24	28	$861.00	0	$0.00	0	$0.00	0	$0.00	0	$0.00	0	$0.00	47	$1,712.22
786.1	Calculate/estimate quantities & MQ Sheets	X			2				16													
786.2	Calculate Earthwork and Develop Summary Tables	X			2				8													
786.3	Prepare Estimate Documentation Report/Determine unit prices	X			2		8															
786.4	Prepare non-delivery cost (Estimator/Trns.port PES estimate)	X			1		4		4													
856	Develop PSE Documents		0	$0.00	1	$55.14	55.5	$2,151.74	0	$0.00	0	$0.00	0	$0.00	0	$0.00	0	$0.00	0	$0.00	56.5	$2,206.88

Summary of Staff Hours and Direct Labor Costs

PROJECT TOTAL

Project ID: **VOJ 1814.001 Main Street RAB**

Activity Code	Classification	"X" As per Scoping	Design Project Manager		Design Engineer - High		Design Engineer-Mid		Design Engineer - Entry		Survey - High		Survey - Mid		Survey - Entry		Traffic Engineer - Mid		Administration/Clerical		Total Direct Labor	Total $
	Avg. Hourly Wage		$72.87		$55.14		$38.77		$30.75		$45.00		$40.50		$24.00		$46.41		$38.51			
	Task		Hours	Dollars	Hours	Dollars	Hours	Dollars	Hours	Dollars	Hours	Dollars	Hours	Dollars	Hours	Dollars	Hours	Dollars	Hours	Dollars	Hours	Dollars
856.1	Develop special provisions	X			1		4															
856.2	Develop construction time chart	X					4															
856.3	Develop certificate of right of way	X					0.5															
856.4	Develop Utility status report	X					4															
856.5	Develop Certification of Railroad Coordination	X					0.5															
856.6	Develop Governors Bond - DT25	X					0.5															
856.7	Develop highway work proposal	X					0.5															
856.8	Develop plan letter	X					2															
856.9	Develop news release form	X					0.5															
856.10	Develop notes to construction engineer	X					1															
856.12	AutoCAD Civil 3D Project Data Submittal	X					16															
856.14	Contractor Data Packet	X					16															
856.15	Create Standard Detail Spreadsheet	X					2															
856.16	Prepare e-plan submittal	X					4															
	Data, Survey, and Mapping																					
382	Setup Survey Project		0	$0.00	1	$55.14	0	$0.00	0	$0.00	0	$0.00	1	$40.50	0	$0.00	0	$0.00	0	$0.00	2	$95.64
382.0	Setup Project Survey	X			1								1									
666	Establish Project Control		0	$0.00	0	$0.00	0	$0.00	0	$0.00	0	$0.00	4	$162.00	4	$96.00	0	$0.00	0	$0.00	8	$258.00
666.0	Establish Project Control - Supplemental Control Survey	X																				
666.1	Set horizontal and vertical control for GPS or other conventional methods																					
666.1.1	Set project control	X											2		2							
666.1.2	Set project benchmarks	X											2		2							
666.1.3	Create control tie sheets																					
723	Conduct and Process Existing Field Survey		0	$0.00	10	$551.40	0	$0.00	0	$0.00	0	$0.00	37	$1,498.50	24	$576.00	0	$0.00	0	$0.00	71	$2,625.90
723.1	Review plans and as-builts	X											2									
723.4	Existing surface and topographic survey	X											20		20							
723.6	Cooridnate diggers hotline	X											2									
723.11	Review 1077 utility facility maps	X			2								1									
723.12	Field survey exisitng utilities	X											4		4							
723.14	Process survey data and create existing surface	X			4								4									
723.15	Field notes	X											1									
723.18	Create deliverables in Civil 3D	X			4								2									
723.19	Reduce field notes	X											1									
726	Survey Existing and Proposed Right-of-Way		0	$0.00	0	$0.00	0	$0.00	0	$0.00	0	$0.00	13	$526.50	12	$288.00	0	$0.00	0	$0.00	25	$814.50
726.8	Review plans and as-builts	X											1									
726.10	Field locate section corners, block corners, iron pins	X											4		4							
726.12	Survey section corners	X											4		4							
726.13	Appraisal staking	X											4		4							
897	Place Monumentation		0	$0.00	0	$0.00	0	$0.00	0	$0.00	0	$0.00	4	$162.00	4	$96.00	0	$0.00	0	$0.00	8	$258.00
897.1	Set right of way pins	X											4		4							
745	Develop Plat		0	$0.00	2	$110.28	40	$1,550.80	0	$0.00	12	$540.00	0	$0.00	0	$0.00	0	$0.00	0	$0.00	54	$2,201.08
745.0	Develop Traditional Plat	X			2		40				8											
745.19	Acquistion Exhibits (Permanent & Temporary R/W Interests) - 50 parcels																					
745.19.7	Legal Descriptions/Title Report Review	X									4											
	Environmental and Cultural Impact	**X**																				
762	Analyze Socio-Economic and Physical Environment Impacts		0	$0.00	0	$0.00	1	$38.77	0	$0.00	0	$0.00	0	$0.00	0	$0.00	0	$0.00	0	$0.00	1	$38.77
762.4	Review community and residential issues																					
762.4.1	Evaluate right of way impacts	X					1															
762.4.4	Collect/obtain population data																					
762.4.5	Evaluate impacts to environmental justice and Title VI populations																					
763	Analyze Archaeological and Historical Impact and Tribal Consultation		0	$0.00	10	$551.40	0	$0.00	0	$0.00	0	$0.00	0	$0.00	0	$0.00	0	$0.00	2	$77.02	12	$628.42
763.0	Review Archaeological and Historical Impact and Tribal Consultation	X																	2			
765	Analyze Hazardous Materials Site Impact		0	$0.00	5	$275.70	0	$0.00	0	$0.00	0	$0.00	0	$0.00	0	$0.00	0	$0.00	0	$0.00	5	$275.70
765.0	Analyze Hazardous Materials Site Impact	X			4																	
765.2.2	Perform Phase 2.5 investigation, develop materials handling plan and special provisions																					
765.2.2.1	Coordinate phase 2.5 Report & Specials	X			1																	
766	Analyze Natural Environment Impact		0	$0.00	9	$496.26	6	$232.62	0	$0.00	0	$0.00	0	$0.00	0	$0.00	0	$0.00	0	$0.00	15	$728.88
766.1	Evaluate impact on wetlands																					
766.1.1	Determine presence and delineate exisiting wetlands	X			1																	
766.1.2	Determine wetland impacts & Process 404 Permit	X			8																	
766.7	Evaluate impacts to Threatened and Endangered Species																					
766.7.1	Determine if any species are present in project area (IPaC/official species list for federally listed species, NHI review for state listed species)	X					2															
766.7.4	Agency Consultation																					
766.7.4.1	Federally Listed Species (Section 7 Consultation): United States Fish and Wildlife Service (USFWS)	X					2															
766.7.4.2	State Listed Species: Wisconsin Department of Natural Resources (WDNR)	X					2															
769	Environmental Documentation and Agency Coordination		0	$0.00	0	$0.00	14	$542.78	0	$0.00	0	$0.00	0	$0.00	0	$0.00	0	$0.00	0	$0.00	14	$542.78
769.0	Environmental Documentation and Agency Coordination	X																				

Summary of Staff Hours and Direct Labor Costs

PROJECT TOTAL

Project ID: **VOJ 1814.001 Main Street RAB**

Activity Code	Classification	"X" As per Scoping	Design Project Manager		Design Engineer - High		Design Engineer-Mid		Design Engineer - Entry		Survey - High		Survey - Mid		Survey - Entry		Traffic Engineer - Mid		Administration/Clerical		Total Direct Labor	Total $
	Avg. Hourly Wage		$72.87		$55.14		$38.77		$30.75		$45.00		$40.50		$24.00		$46.41		$38.51			
	Task		Hours	Dollars	Hours	Dollars	Hours	Dollars	Hours	Dollars	Hours	Dollars	Hours	Dollars	Hours	Dollars	Hours	Dollars	Hours	Dollars	Hours	Dollars
769.1	Initial Agency and Tribal Coordination																					
769.1.1	WDNR	X					2															
769.1.2	USFWS	X					4															
769.4	Categorical Exclusion Checklist	X					8															
	Traffic Operations																					
313	Analyze Traffic Data/ Forecast		0	$0.00	0	$0.00	0	$0.00	0	$0.00	0	$0.00	0	$0.00	0	$0.00	4	$0.00	0	$0.00	4	$0.00
313.2	Review/Document crash data-analyze crash trends	X															4					
788	Develop Traffic Control and Staging		2	$145.74	4	$220.56	0	$0.00	48	$1,476.00	0	$0.00	0	$0.00	0	$0.00	18	$0.00	0	$0.00	72	$1,842.30
788.0	Develop Traffic Control and Staging	X																				
788.1	Develop/Coordinate/Review Transportation Management Plan (Type 2) for all statuses.																					
788.1.5	Temporary pedestrian accomodations	X			1				4								2					
788.4	Traffic control plan (1 - General detail/typicals)	X			1				4													
788.5	Traffic control staging plans	X	1		2				40													
788.6	50% TMP, Alternative Matrix, 90% TMP & 50% Region Meeting	X	1														16					
	Real Estate, Railroad and Utilities	**X**																				
746	Coordinate Utilities		0	$0.00	4.5	$248.13	43	$1,667.11	0	$0.00	0	$0.00	0	$0.00	0	$0.00	0	$0.00	0	$0.00	47.5	$1,915.24
746.0	Coordinate Utilities	X					4															
746.1	Prepare and maintain TUMS or DT1079 form	X					1															
746.4	Review/Update Utility Coordination Task List and/or review DOT utility coordination docs	X					2															
746.5	Prepare and Hold OPM	X					0															
746.6	1077 Docs	X					0															
746.7	Obtain/review system maps	X					2															
746.10	Identify potential utility conflicts	X					8															
746.11	1078 Project Plan Process	X			1		8															
746.13	Plan changes	X			0.5		2															
746.14	Reviews of utility work plans	X					4															
746.15	Create or review utility special provisions	X			0.5		8															
746.17	Work plan approval and start work notice process	X			0.5		4															
746.20	Post PS&E activities	X			2																	
	Construction Management																					
	Post-PSE through Letting																					
790	Manage Post-PSE Though Let		0	$0.00	6	$330.84	0	$0.00	0	$0.00	0	$0.00	0	$0.00	0	$0.00	0	$0.00	0	$0.00	6	$330.84
790.1	Prepare addendum development form and addendum form	X			2																	
790.2	Respond to contractor inquires prior to let	X			2																	
790.3	Respond to BPD requests (engineer's estimate justification, etc.)	X			2																	
	Construction Contract Administration																					
885	Enforce Labor Provisions		3	$218.61	3	$165.42	0	$0.00	0	$0.00	0	$0.00	0	$0.00	0	$0.00	0	$0.00	0	$0.00	6	$384.03
885.2	Precon preparation and attendance	X	3		3																	
	TOTAL:		**56**	**$3,362.03**	**108.5**	**$5,982.69**	**195.5**	**$7,579.54**	**336**	**$10,332.00**	**12**	**$540.00**	**59**	**$2,389.50**	**44**	**$1,056.00**	**34**	**$0.00**	**39**	**$1,126.79**	**884.00**	**$33,462.35**

Consultant Direct Labor Rates

Project ID: **VOJ 1814.001 Main Street RAB**

Employee Number (a)	Classification (b)	Current Rate(c)	% Pay Increase(d)	New Pay Rate(e)	Date of Increase(f)	% Pay Increase(g)	New Pay Rate(h)	Date of Increase(i)	% Pay Increase(j)	New Pay Rate(k)	Date of Increase(l)	% Work at Current Rate (c)	% Work at Increased Rate (e)	% Work at Increased Rate (h)	% Work at Increased Rate (k)	Weighted Average Hourly Rate(i)
000003	Design Project Manager	$ 72.29	3.2%	$74.60	1/1/2023	3.2%	$76.99	1/1/2024	3.2%	$ 79.45	1/1/2025	75.0%	25.0%	0.0%	0.0%	$72.87
000077	Design Engineer - High	$ 54.70	3.2%	$56.45	1/1/2023	3.2%	$58.26	1/1/2024	3.2%	$ 60.12	1/1/2025	75.0%	25.0%	0.0%	0.0%	$55.14
Weighted	Design Engineer-Mid	$ 38.46	3.2%	$39.69	1/1/2023	3.2%	$40.96	1/1/2024	3.2%	$ 42.27	1/1/2025	75.0%	25.0%	0.0%	0.0%	$38.77
Weighted	Design Engineer - Entry	$ 30.50	3.2%	$31.48	1/1/2023	3.2%	$32.49	1/1/2024	3.2%	$ 33.53	1/1/2025	75.0%	25.0%	0.0%	0.0%	$30.75
000168	Survey - High	$ 45.00	3.2%	$46.44	1/1/2023	3.2%	$47.93	1/1/2024	3.2%	$ 49.46	1/1/2025	100.0%	0.0%	0.0%	0.0%	$45.00
000375	Survey - Mid	$ 40.50	3.2%	$41.80	1/1/2023	3.2%	$43.14	1/1/2024	3.2%	$ 44.52	1/1/2025	100.0%	0.0%	0.0%	0.0%	$40.50
000453	Survey - Entry	$ 24.00	3.2%	$24.77	1/1/2023	3.2%	$25.56	1/1/2024	3.2%	$ 26.38	1/1/2025	100.0%	0.0%	0.0%	0.0%	$24.00
000388	Traffic Engineer - Mid	$ 46.04	3.2%	$47.51	1/1/2023	3.2%	$49.03	1/1/2024	3.2%	$ 50.60	1/1/2025	75.0%	25.0%	0.0%	0.0%	$46.41
000004	Administration/Clerical	$ 38.20	3.2%	$39.42	1/1/2023	3.2%	$40.68	1/1/2024	3.2%	$ 41.98	1/1/2025	75.0%	25.0%	0.0%	0.0%	$38.51

Contract Completion Date (as per scoping):	6/30/2024
Contract Duration in Months:	24
Estimated NTP Date *(today's date +60 bus. days)* :	6/1/2022

Consultant Weighted Average Direct Labor Rates

Project ID: VOJ 1814.001 Main Street RAB

Classification: Design Engineer-Mid

Employee Number (a)	Current Rate (b)	Percent Contribution (c)	(b*c)
000465	$37.52	50.00%	$18.76
000192	$39.39	50.00%	$19.70
TOTAL		100.00%	$38.46

Classification: Design Engineer - Entry

Employee Number (a)	Current Rate (b)	Percent Contribution (c)	(b*c)
000460	$31.00	50.00%	$15.50
000077	$30.00	50.00%	$15.00
TOTAL		100.00%	$30.50

Fee Computation Summary by Engineering Task

PROJECT TOTAL

Project ID: VOJ 1814.001 Main Street RAB

Activity Code	Task	Filter by "X"	Direct Labor Costs	Overhead Costs	Fixed Fee/Profit	Direct Expenses	Total
887	Manage Project Scope and Schedule	X	$ 1,278.15	$ 2,025.23	$ 231.66	$ -	$3,535.04
773	Manage Consultant Contract	X	$ 1,113.80	$ 1,764.82	$ 201.88	$ -	$3,080.50
743	Manage Project Stakeholders	X	$ 1,895.41	$ 3,003.28	$ 343.54	$ 858.50	$6,100.73
893	Manage Project Communications	X	$ 832.37	$ 1,318.89	$ 150.87	$ -	$2,302.13
208	Design Soils & Earthwork	X	$ 220.56	$ 349.48	$ 39.98	$ -	$610.02
768	Design Erosion Control and Landscaping		$ -	$ -	$ -	$ -	$0.00
776	Design Geometrics and Details	X	$ 11,262.88	$ 17,846.03	$ 2,041.40	$ 58.50	$31,208.81
786	Develop Quantities and Estimates	X	$ 1,712.22	$ 2,713.01	$ 310.34	$ -	$4,735.57
856	Develop PSE Documents	X	$ 2,206.88	$ 3,496.80	$ 400.00	$ -	$6,103.68
382	Setup Survey Project	X	$ 95.64	$ 151.54	$ 17.33	$ -	$264.51
666	Establish Project Control	X	$ 258.00	$ 408.80	$ 46.76	$ -	$713.56
723	Conduct and Process Existing Field Survey	X	$ 2,625.90	$ 4,160.74	$ 475.94	$ 58.50	$7,321.08
726	Survey Existing and Proposed Right-of-Way	X	$ 814.50	$ 1,290.58	$ 147.63	$ 58.50	$2,311.21
897	Place Monumentation	X	$ 258.00	$ 408.80	$ 46.76	$ -	$713.56
745	Develop Transportation Project Plat (TPP)	X	$ 2,201.08	$ 3,487.61	$ 398.95	$ -	$6,087.64
766	Analyze Natural Environment Impact	X	$ 728.88	$ 1,154.91	$ 132.11	$ -	$2,015.90
769	Environmental Documentation and Agency Coordination	X	$ 542.78	$ 860.03	$ 98.38	$ -	$1,501.19
788	Develop Traffic Control and Staging	X	$ 1,842.30	$ 2,919.12	$ 333.92	$ -	$5,095.34
746	Coordinate Utilities	X	$ 1,915.24	$ 3,034.70	$ 347.14	$ -	$5,297.08
847	Coordinate Railroad		$ -	$ -	$ -	$ -	$0.00
790	Manage Post-PSE Though Let	X	$ 330.84	$ 524.22	$ 59.96	$ -	$915.02
	TOTAL:		$32,135.43	$50,918.59	$5,824.55	$1,034.00	$89,912.57

Home Office Indirect Cost Rate: 158.45% **Fixed Fee:** 7.25%

Standard Indirect Cost Rate to Compute Fixed Fee: 150%

Direct Costs by Item

Project ID: **VOJ 1814.001 Main Street RAB**

Item	Unit Amount	Unit Type	Rate	Total Expenses
Mileage	400	Miles	$ 0.585	$234.00
Mailhaus Newsletter Mailing/Postage Service	1	Each	$ 800.000	$800.00
	0			$0.00
TOTAL				$1,034.00

Consultant Contract Total Fee Computation

Project ID	VOJ 1814.001 Main Street RAB				Total for Contract
Number of Staff Hours	884				884
Total Direct Labor	$32,135.43				$32,135.43
Total Indirect Costs	$50,918.59				$50,918.59
Fixed Fee/Profit	$5,824.55				$5,824.55
Direct Costs	$1,034.00				$1,034.00
Subtotal	$89,912.57	$0.00	$0.00	$0.00	$89,912.57
MSA	$166,980.00				$166,980.00
Powrtek	$7,445.44				$7,445.44
Himalayan Consultants	$9,998.39				$9,998.39
Knight Barry	$1,050.00				$1,050.00
Metropolitan Appraisal	$10,000.00				$10,000.00
Valbridge	$2,775.00				$2,775.00
Ramboll	$11,528.00				$11,528.00
UWM-CRM	$3,105.00				$3,105.00
Subcontract Subtotal	$212,881.83	$0.00	$0.00	$0.00	$212,881.83
TOTAL COST	$302,794.40	$0.00	$0.00	$0.00	$302,794.40

Home Office Indirect Cost Rate: 158.45%

Fixed Fee: 7.25%

Standard Indirect Cost Rate to Compute Fixed Fee: 150%

MSA Office Address
1702 Pankratz Street
Madison, WI 53704

P: (608) 242-7779
TF: (800) 446-0679
F: (608) 242-5664

April 22, 2022

Mr. Stan Lukasz, P.E.
DAAR Engineering, Inc.
518 W Cherry St
Milwaukee, WI 53212

Re: STH 60 & Eagle Drive Roundabout Design
Village of Jackson
Washington County

Dear Stan:

Thank you for the opportunity to be a member of the Design Team for the Subject Project. As a subconsultant to DAAR Engineering, Inc., MSA proposes to perform the work as described in the attached "MSA Scope of Services" document for an Actual Cost Not to Exceed amount of **$166,980.00**. Please refer to the attached cost spreadsheet for additional breakdown.

Sincerely,

MSA Professional Services, Inc.

Ben Wilkinson, P.E.
Project Manager/Team Leader

SCOPE OF SERVICES

STH 60 & Eagle Drive Roundabout Design
Village of Jackson
Washington County

MSA PROFESSIONAL SERVICES, INC. (MSA)

The CONTRACT Scope of Services for the above referenced project will be based on the following:

1. GENERAL
   As subconsultant to DAAR Engineering, Inc., MSA will perform the following services for the above-referenced project:
   - Road design for the proposed single lane roundabout at STH 60 and Eagle Drive intersection
   - Structural design of one retaining wall, located on the northwest quadrant
   - Assistance in some reports, meetings, utility coordination, and PS&E documents, generally in relation to MSA areas of work described above.

   The project limits for MSA road design work are along STH 60 are approximately 700 feet west of, to 600 feet east of the intersection center. Also along Eagle Drive from approximately 200 feet south of, to 400 feet north of the intersection center. These limits are as depicted in an SRF ICE report exhibit report dated February 10, 2022.

   Plans will be developed using WisDOT drafting and plan standards and using WisDOT bid items. Assume DOT will review the work as part of the larger DAAR design project, WisDOT ID 2310-13-00/70.

2. REPORTS
   a. Prepare a Hydraulic Sizing Memo for the twin culvert pipes under Eagle Drive along the north side of STH 60, and the single culvert pipe under Eagle Drive along the south side of STH 60. The assumed work will involve either extending the pipes in-kind, or total replacement, if required for RAB geometry. Assumes no other storm sewer design or reporting needed – surface drains only.
   b. One Retaining Wall Structure Survey Report (DOT form) is included, with attachments.
   c. Prepare and sign the Roundabout Critical Parameters worksheet for inclusion in the DSR.

3. ENVIRONMENTAL DOCUMENTATION
   a. No work included.

4. AGENCY/UTILITY/RAILROAD COORDINATION
   a. Assist with Utility Coordination:
      i. Provide cross-sections with existing utility locations within the roundabout area.
      ii. Provide list of potential conflicts in retaining wall and culvert areas designed by MSA.
   b. All other utility coordination will be by DAAR Engineering, Inc.

5. PUBLIC INVOLVEMENT
   a. None included. Public involvement by DAAR Engineering, Inc.

6. MEETINGS
    a. Includes one MSA representative to participate in up to four Progress Meeting Conference Calls.
    b. Includes one MSA representative at up to two Plan Review Meetings (via phone conference).
    c. Attendance at the Preconstruction Conference is not included.

7. SOILS AND SUBSURFACE INVESTIGATIONS
    a. No subsurface exploration included.

8. SURVEY
    a. No Survey included.

9. PRELIMINARY ROAD DESIGN (Roundabout area, limits described above under "GENERAL")
    a. Research Existing Files.
    b. File Creation.
        i. Existing Utility Alignments/Profiles
        ii. DTM Importing
    c. Design
        i. Plan layout of RAB
        ii. Alignments
        iii. Profiles
        iv. Typical Sections
        v. Preliminary Cross Sections
        vi. Intersection Geometrics
        vii. Lighting Coordination (Lighting Design and plans by others)
        viii. Truck Movements (including review of OSOW permits and accommodations)
        ix. Roundabout 30% Plan
        x. Roundabout 60% Plan
    d. Preliminary Drafting
        i. Typical Sections
        ii. Construction Details (for 60% plan).
        iii. Erosion Control Plan (for 60% plan)
        iv. Paving Details (for 60% plan). Assumes asphalt pavement.
        v. Curb Ramp Details
        vi. Plan Profiles
        vii. Traffic Control and Staging – not included; by DAAR Engineering, Inc. Included at 30% and 60% plan development is review assistance relating to the roundabout and structures area staging.
    e. Preliminary Estimates: provide Excel file with major bid items and qtys to DAAR Engineering, Inc.
        i. 60% Estimate
    f. QA/QC

10. FINAL ROAD DESIGN (Roundabout area described above under "GENERAL")
    a. Design
        i. Final Geometrics
        ii. Final Cross Sections
        iii. Quantity Calculations
    b. Final Plans

i. Typical Sections
ii. Construction Details
iii. Erosion Control Plan
iv. Paving Details
v. Roundabout Details
vi. Curb Ramp Details
vii. Plan Profile
viii. Alignment Sheet
ix. Earthwork Sheet
x. Excel file with Quantity Tables for DAAR Engineering, Inc. to incorporate into Miscellaneous Quantities sheets
xi. Traffic Control - not included; by DAAR Engineering, Inc. Included at 90% plan development is review assistance relating to the roundabout and structures area staging.

c. QA/QC

11. DRAINAGE DESIGN
    a. MSA will perform a hydrologic and hydraulic analysis of flows tributary to the culvert crossings passing eastward under Eagle Drive in the north and south roadside ditches of STH 60.
        i. Hydrologic Study. MSA will prepare a HydroCAD computer model for purposes of estimating peak flows at each culvert and at selected locations upstream and downstream from each culvert as determined by MSA's project engineer. The watershed tributary to the northern culvert appears to be approximately 224 acres in size, is nearly completely fully developed and contains at least three stormwater detention ponds. The watershed tributary to the southern culvert appears to be much smaller serving only the area in close proximity to the culvert itself.
        ii. Hydraulic Study. MSA will construct an HEC-RAS model of the north side creek for purposes of determining the size of culvert necessary to pass 25-yr peak flows without overtopping the road. MSA will utilize the findings of the HydroCAD model of the southern culvert to determine the necessary size to pass 25-yr peak flows without overtopping the road.
    b. Assumptions:
        i. Survey will be by others. Survey will include the creek on the north side of STH 60 beginning at Cedar Creek and extending upstream past Eagle Drive to Georgetown Drive (approximately 3,400 feet). Survey will include collection of flow-line shots approximately every 250 feet and one 'wet' cross-section approximately every 500 feet, with at least one wet section between each existing culvert cross-section. Survey will include three culverts.
        ii. Storm sewer alignment maps for the Village will be made available to MSA in GIS format.
        iii. Available construction plans and applicable stormwater management plans for detention ponds within the study area will be provided to MSA.

12. PLANS, SPECS AND PS&E DOCUMENTS (Roundabout area described above under "GENERAL", and structure items)
    a. Provide Special Provisions (for Roundabout and Retaining Wall special items)
    b. Provide Time Chart data (for the Roundabout and Retaining Wall)
    c. Provide final bid items and quantities for Engineers Estimate
    d. Digital Data Exchange with DAAR Engineering, Inc. Data exchange directly with the client, if any, would be by DAAR Engineering, Inc.

e. It is assumed questions during bidding and construction will go thru DAAR Engineering, Inc. MSA will assist with answering questions on roundabout and retaining wall.

13. STRUCTURE DESIGN
    a. MSE Retaining Wall (at NW quadrant)
        i. Assume a modular block MSE retaining wall will be required
        ii. Assume a pedestrian railing will be attached to the top of the wall (see railing section below), at the back of a proposed sidewalk. Assume no parapet or other crash-tested barrier required or included.
        iii. Assume base of wall protected by heavy riprap berm running along the edge of the existing drainage channel/tributary, to protect the wall. Standard wall foundation type and depths assumed.
        iv. LRFD design criteria for the wall
        v. The overall stability, preliminary external stability, and settlement shall be determined by a geotechnical engineer (not provided by MSA).
        vi. The internal stability and structural design of the wall are the responsibility of the contractor.
        vii. Assume that the retaining wall will be new construction. Rehabilitation of or tying into existing retaining wall is not anticipated.
        viii. Up to 5 plan sheets are anticipated, including railing.
    b. Pedestrian Railing
        i. Assume a pedestrian railing will be attached to the top of the wall using a C.I.P. concrete coping.
        ii. The railing will be a standard WisDOT pedestrian railing. Detail included.
    c. Structure Cost Estimates
        i. Provide Excel spreadsheet with Major bid item quantities for preliminary estimates
        ii. Provide excel spreadsheet with final wall and railing quantities.

14. RIGHT OF WAY ACQUISITION
    a. Assume up to two Fee & TLE parcels to acquire, on the southwest and southeast quadrants. Assume the north side of STH 60 has enough existing right of way with the existing vision triangle boundaries.
    b. Assume both are commercial properties, with impact to each property's business sign, along with a small portion of each parking lot. For this reason, and the timeframe, a Before and After Appraisal is assumed required for each parcel for valuation. A separate Review Appraiser is also assumed required.
        i. Costs for Appraisals and Review Appraisals are assumed to be contracted as subconsultants to DAAR Engineering, Inc (not provided by MSA).
        ii. Requires Offering Price Report, by MSA
    c. Includes are up to 6 recording fees at $36/each, using Simplifile.
    d. Assumes a minimum of 6 months to acquire right of way after the Relocation Order and plat are approved and filed with the County Clerk (by September 23, 2022), and prior to the target completion deadline of April 4, 2023.
    e. Assumed not included but can be added if necessary by contract amendment if determined to be required and approved by the Village:
        i. In-person meetings with village board or officials, or public info meetings.
        ii. Utility coordination/releases.
        iii. Encroachments. Assumes Revocable Occupancy Permits or letters of removal not required, or will be by the Village
        iv. Info on existing Mortgages, if any, is not available. Partial Releases of

Mortgage for any Fee parcels can be added later through Contract Amendment upon determination of scope.

v. Off-premise signs requiring coordination or negotiation

f. Assumed by DAAR Engineering, Inc., or others:

i. Utility Releases of Rights, if any, will be coordinated by DAAR Engineering, Inc. or WisDOT.

ii. Survey, plat, descriptions, Relocation Order, Title work or updates, research, staking, monumentation.

15. Services assumed provided by others:

a. Field survey, including additional field info as may be required, including hydraulic-related surveys for the cross-drain design.

b. Street Lighting, signing, pavement marking. Assumes no overhead sign structures.

c. The overall stability, preliminary external stability, and settlement of proposed retaining wall shall be determined by a geotechnical engineer (not provided by MSA).

d. Renderings or animations assumed not required; not included.

16. SCHEDULE, assumes a May 23, 2022 start

a.	30% Preliminary Roundabout Plan:	June 27, 2022
b.	60% Roundabout Plan:	August 15, 2022
c.	Preliminary Retaining Wall Plan:	August 15, 2022
d.	Final Plat approved (DAAR):	September 16, 2022
e.	Final Retaining Wall Plan:	February 1, 2023
f.	Draft PSE:	February 1, 2023
g.	R/E Acquisition Complete:	April 4, 2023
h.	Final PSE:	May 1, 2023
i.	Design Contract Complete:	July 31, 2023
j.	Let:	September 2023
k.	Construction:	2024

STH 60 & Eagle Drive Roundabout Design
Village of Jackson

Summary of Staff Hours and Labor Costs

Classification	Project Manager/Roundabout Designer		Senior Project Engineer 2		Senior Project Engineer 1		Project Engineer 2		Project Engineer 1		R/E Acquisition Specialist 2		R/E Acquisition Specialist 1		Expenses		
Hourly Wage	$200.00		$160.00		$140.00		$120.00		$100.00		$140.00		$120.00			**Total Cost**	
Task	**Hours**	**Dollars**	**Hours**	**Dollars**	**Hours**	**Dollars**	**Hours**	**Dollars**	**Hours**	**Dollars**	**Hours**	**Dollars**	**Hours**	**Dollars**		**Hours**	**Dollars**
1. Project Management & Coordination																	
Project Administration/Management	12	$2,400.00	0	$0.00	0	$0.00	0	$0.00	0	$0.00	0	$0.00	0	$0.00	$0.00	12	$2,400.00
Subtotal	12	$2,400.00	0	$0.00	0	$0.00	0	$0.00	0	$0.00	0	$0.00	0	$0.00	$0.00	12	$2,400.00
4. Agency/Utility Coordination																	
Assist with Utility Coordination	0	$0.00	0	$0.00	8	$1,120.00	0	$0.00	0	$0.00	0	$0.00	0	$0.00	$0.00	8	$1,120.00
Subtotal	0	$0.00	0	$0.00	8	$1,120.00	0	$0.00	0	$0.00	0	$0.00	0	$0.00	$0.00	8	$1,120.00
6. Meetings																	
Progress Meetings (4 via web meeting)	8	$1,600.00	0	$0.00	0	$0.00	0	$0.00	0	$0.00	0	$0.00	0	$0.00	$0.00	8	$1,600.00
DOT Plan Review Meetings (2 via web meeting)	4	$800.00	0	$0.00	0	$0.00	0	$0.00	0	$0.00	0	$0.00	0	$0.00	$0.00	4	$800.00
Subtotal	12	$2,400.00	0	$0.00	0	$0.00	0	$0.00	0	$0.00	0	$0.00	0	$0.00	$0.00	12	$2,400.00
9. Preliminary Road Design																	
Horizontal Design	4	$800.00	8	$1,280.00	24	$3,360.00	40	$4,800.00	0	$0.00	0	$0.00	0	$0.00	$0.00	76	$10,240.00
Vertical Design	4	$800.00	8	$1,280.00	32	$4,480.00	80	$9,600.00	0	$0.00	0	$0.00	0	$0.00	$0.00	124	$16,160.00
Plan Details	2	$400.00	2	$320.00	8	$1,120.00	40	$4,800.00	40	$4,000.00	0	$0.00	0	$0.00	$0.00	92	$10,640.00
Plan and Profile/Cross Sections	2	$400.00	2	$320.00	4	$560.00	40	$4,800.00	0	$0.00	0	$0.00	0	$0.00	$0.00	48	$6,080.00
Quantities and Estimates	2	$400.00	2	$320.00	4	$560.00	8	$960.00	40	$4,000.00	0	$0.00	0	$0.00	$0.00	56	$6,240.00
Curb Ramp Design	2	$400.00	2	$320.00	4	$560.00	32	$3,840.00	0	$0.00	0	$0.00	0	$0.00	$0.00	40	$5,120.00
Subtotal	16	$3,200.00	24	$3,840.00	76	$10,640.00	240	$28,800.00	80	$8,000.00	0	$0.00	0	$0.00	$0.00	436	$54,480.00
10. Final Road Design																	
Horizontal Design	2	$400.00	4	$640.00	8	$1,120.00	0	$0.00	0	$0.00	0	$0.00	0	$0.00	$0.00	14	$2,160.00
Vertical Design	2	$400.00	4	$640.00	8	$1,120.00	40	$4,800.00	0	$0.00	0	$0.00	0	$0.00	$0.00	54	$6,960.00
Plan Details	2	$400.00	2	$320.00	8	$1,120.00	24	$2,880.00	80	$8,000.00	0	$0.00	0	$0.00	$0.00	116	$12,720.00
Plan and Profile/Cross Sections	2	$400.00	0	$0.00	8	$1,120.00	40	$4,800.00	0	$0.00	0	$0.00	0	$0.00	$0.00	50	$6,320.00
Quantities and Estimates	2	$400.00	2	$320.00	8	$1,120.00	16	$1,920.00	40	$4,000.00	0	$0.00	0	$0.00	$0.00	68	$7,760.00
Subtotal	10	$2,000.00	12	$1,920.00	40	$5,600.00	120	$14,400.00	120	$12,000.00	0	$0.00	0	$0.00	$0.00	302	$35,920.00
11. Drainage Design																	
Modeling, Design, and Reporting	2	$400.00	6	$960.00	50	$7,000.00	48	$5,760.00	4	$400.00	0	$0.00	0	$0.00	$0.00	110	$14,520.00
Subtotal	2	$400.00	6	$960.00	50	$7,000.00	48	$5,760.00	4	$400.00	0	$0.00	0	$0.00	$0.00	110	$14,520.00
12. PS&E																	
Special Provisions	2	$400.00	8	$1,280.00	0	$0.00	0	$0.00	0	$0.00	0	$0.00	0	$0.00	$0.00	10	$1,680.00
Time Chart	2	$400.00	0	$0.00	8	$1,120.00	0	$0.00	0	$0.00	0	$0.00	0	$0.00	$0.00	10	$1,520.00
Final Quantities and Estimate	2	$400.00	0	$0.00	8	$1,120.00	0	$0.00	0	$0.00	0	$0.00	0	$0.00	$0.00	10	$1,520.00
Digital Data	0	$0.00	0	$0.00	8	$1,120.00	0	$0.00	0	$0.00	0	$0.00	0	$0.00	$0.00	8	$1,120.00
Subtotal	6	$1,200.00	8	$1,280.00	24	$3,360.00	0	$0.00	0	$0.00	0	$0.00	0	$0.00	$0.00	38	$5,840.00
13. Structure Design																	
Retaining wall with railing	4	$800.00	50	$8,000.00	66	$9,240.00	96	$11,520.00	0	$0.00	0	$0.00	0	$0.00	$0.00	216	$29,560.00
Structure Survey Report for Wall (1)	1	$200.00	2	$320.00	5	$700.00	5	$600.00	0	$0.00	0	$0.00	0	$0.00	$0.00	13	$1,820.00
Structure special provisions	1	$200.00	3	$480.00	6	$840.00	0	$0.00	0	$0.00	0	$0.00	0	$0.00	$0.00	10	$1,520.00
Subtotal	6	$1,200.00	55	$8,800.00	77	$10,780.00	101	$12,120.00	0	$0.00	0	$0.00	0	$0.00	$0.00	239	$32,900.00
14. Right-of-Way Acquisition																	
Acquisitions, two commercial parcels with signs	4	$800.00	0	$0.00	0	$0.00	0	$0.00	0	$0.00	70	$9,800.00	40	$4,800.00	$1,000.00	114	$16,400.00
Subtotal	4	$800.00	0	$0.00	0	$0.00	0	$0.00	0	$0.00	70	$9,800.00	40	$4,800.00	$1,000.00	114	$16,400.00
SUBTOTAL:	**62**	**$13,600.00**	**105**	**$16,800.00**	**275**	**$38,500.00**	**509**	**$61,080.00**	**204**	**$20,400.00**	**70**	**$9,800.00**	**40**	**$4,800.00**	**$1,000.00**	**1,265**	**$165,980.00**
EXPENSES:																	**$1,000.00**
TOTAL:																	**$166,980.00**

565 Milwaukee Avenue, Suite 3B
Burlington, WI 53105
www.powrtek.com
262-827-9575

April 20, 2022

Mr. Stan Lukasz, P.E.
Project Manager
DAAR Engineering, Inc.
518 W. Cherry Street
Milwaukee, WI 53212

RE: ID 2130-13-00/70
STH 60 & Eagle Dr Roundabout
Village of Jackson
Washington County

Stan:
We appreciate the opportunity to provide you with a fee proposal for this project and look forward to working with you. We have included our fee proposal and scope of services.

SUMMARY OF PROJECT
The project includes lighting design for new roundabout in accordance with WisDOT standards.

ELECTRICAL FEE:
- The contract total will be $7,445.44.
- The fee includes all labor and expenses - See attachment for details on this specific hourly rate proposal.
- Completion Date: 12/31/2023

SCOPE OF SERVICES
- Design coordination.
- Lighting design for roundabout.
- Lighting controls/service layout, wiring diagrams, details – WisDOT SDDs anticipated.
- Voltage drop calculations.
- Lighting calculations.
- Drafting.
- Submittal for review of 60%, draft PS&E and final PS&E plans.
- Miscellaneous quantities.
- Cost estimate.
- Print and electronic file furnished to Powrtek.
- Specifications in DOT format.

If you have any questions or need any additional information, please don't hesitate to let me know.

Submitted By:

Greg W. Sadowski, P.E.
President

Powrtek Engineering, Inc.

Specific Rate Contract Total Fee Computation

ID 2130-13-00/70
STH 60 & Eagle Dr
Roundabout
Village of Jackson
Washington County

Project ID	ID 2130-13-00/70				Total for Contract
Number of Staff Hours	53				53
Labor-Related Costs	$7,445.44				$7,445.44
Direct Costs	$0.00				$0.00
Subtotal	$7,445.44	$0.00	$0.00	$0.00	$7,445.44
Subcontract 1					$0.00
Subcontract 2					$0.00
Subcontract 3					$0.00
Subcontract Subtotal	$0.00	$0.00	$0.00	$0.00	$0.00
TOTAL COST	$7,445.44	$0.00	$0.00	$0.00	$7,445.44

Fixed Fee calculated based on an Direct Labor multiplier of: 2.5

Company Wide Indirect Rate: 116% **Fixed Fee:** 7.25%

POWRTEK ENGINEERING, INC.

ID 2130-13-00/70
STH 60 & Eagle Dr
Roundabout
Village of Jackson
Washington County

DESIGN ENGINEERING
SUMMARY OF STAFF HOURS AND DIRECT LABOR COSTS

		Greg Sadowski Engineer				Total Direct Labor	
	Hourly Wage	$140.48		$0.00			
TASK	**ACT. CODE**	Hours	Dollars	Hours	Dollars	Hours	Dollars
DRAWING SETUP/PLOTTING		2	$280.96	0	$0.00	2	$280.96
CALCULATIONS - LIGHTING		8	$1,123.84	0	$0.00	8	$1,123.84
CALCULATIONS - VOLTAGE DROP		2	$280.96	0	$0.00	2	$280.96
ELECTRICAL PLANS		16	$2,247.68	0	$0.00	16	$2,247.68
SPECIFICATIONS		8	$1,123.84	0	$0.00	8	$1,123.84
DETAILS - FIELD WIRING DIAGRAM, ETC.		8	$1,123.84	0	$0.00	8	$1,123.84
MISC QUANTITIES		6	$842.88	0	$0.00	6	$842.88
COST ESTIMATE		1	$140.48	0	$0.00	1	$140.48
DESIGN COORDINATION		2	$280.96	0	$0.00	2	$280.96
		0	$0.00	0	$0.00	0	$0.00
LIGHTING DESIGN TOTAL	785	53	$7,445.44	0	$0.00	53	$7,445.44
TOTALS		53	$7,445.44	0	$0.00	53	$7,445.44

POWRTEK ENGINEERING, INC.

ID 2130-13-00/70
STH 60 & Eagle Dr
Roundabout
Village of Jackson
Washington County

FEE COMPUTATION SUMMARY BY ENGINEERING TASK

TASK	ACTIVITY CODE	Direct Labor Costs	Direct Costs	TOTAL
LIGHTING DESIGN	785	$7,445.44	$0.00	$7,445.44
TOTALS		$7,445.44	$0.00	$7,445.44

POWRTEK ENGINEERING, INC.

ID 2130-13-00/70
STH 60 & Eagle Dr
Roundabout
Village of Jackson
Washington County

DIRECT COSTS BY ITEM

ITEM	UNIT AMOUNT	UNIT TYPE	RATE	TOTAL EXPENSES
TRAVEL (EMPLOYEE VEHICLE)	0	MILE	$0.560	$0.00
PLOTTING	0	SHEET	$1.000	$0.00
PRINTING	0	SHEET	$0.10	$0.00
TOTAL EXPENSES				$0.00

POWRTEK ENGINEERING, INC.

Specific Rate Contract Direct Labor Rates

ID 2130-13-00/70
STH 60 & Eagle Dr
Roundabout
Village of Jackson
Washington County

Employee Name	Classification	Current Rate	% Pay Increase	New Pay Rate	Date of Increase	% Work at Current Rate	% Work at Increased Rate	Weighted Average Hourly Rate	Indirect Rate 116%	Fixed Fee 7.25%	Labor-Related Rate	Negotiated Labor-Related Rate
Greg Sadowski	Engineer	$60.00	0.00%	$60.00		100.00%	0.00%	$60.00	$69.60	$10.88	$140.48	$140.48
		$0.00	0.00%	$0.00		100.00%	0.00%	$0.00	$0.00	$0.00	$0.00	$0.00

Fixed Fee calculated based on an Direct Labor multiplier of: 2.5

Contract
Completion Date: 12/31/2023

Himalayan Consultants, LLC
Engineers and Hydrogeologists

April 22, 2022

Tony Baciak, Jr., P.E.
DAAR Engineering
40 Jewelers Park Drive, Suite 120
Neenah, WI 54956

RE: **Project ID 2130-13-00**
STH 60 and Eagle Drive Intersection
Washington County

Dear Mr. Baciak:

As requested, Himalayan Consultants, LLC (Himalayan) is submitting this proposal for conducting a geotechnical investigation (geotechnical drilling, sampling and engineering analysis) in connection with the improvement project referenced above.

The purpose of this investigation is to characterize the soil and groundwater conditions, conduct field and laboratory testing, perform geotechnical analyses and provide recommendations in support of the pavement design and design for extension of the existing modular block retaining wall.

1.0 PROJECT BACKGROUND

It is our understanding that the existing STH 60 and Eagle Drive intersection will be improved and the existing modular block retaining wall located at the northwest corner of the intersection will be extended. Based on the information provided by DAAR Engineering (DAAR), the wall is approximately 135 feet long and has a maximum design height of 5± feet.

2.0 SCOPE OF WORK

Himalayan will perform all investigative activities in accordance with the existing Wisconsin Department of Transportation (WisDOT) practices, applicable ASTM and AASHTO procedures, Wisconsin Department of Natural Resources (WDNR) rules and regulations, and commonly accepted engineering practices. Himalayan's scope of work includes the following:

- Prepare a layout of the proposed borings. Prior to drilling activities, Himalayan will provide DAAR a rough field stakeout of boring locations. Upon completion of the drilling activities,

Himalayan will provide stationing and surface elevations of boring locations in reference to the project corridor based on design files provided by DAAR.

- Contact and coordinate with the Digger's Hotline to obtain the utility clearance (coordination for utility locate) at the boring locations and surrounding areas prior to commencement of drilling.

- Administer a drilling subcontract to advance 2 pavement cores, 2 pavement borings and two retaining wall borings as follows (the existing pavement is assumed to consist of approximately 4-inch thick asphaltic concrete over 6-inch base course):

  - **Pavement Cores:** Two cores of the existing asphaltic concrete pavement from the northeast and northwest corner of the intersection.
  - **Roadway Borings:** Two borings on the northeast and northwest corner of the intersection at core locations. Borings will be advanced to depths of 10 feet below ground surface (bgs).
  - **Retaining Wall Borings:** Two borings spaced at approximately 50 to 100 feet apart on the northwest corner of the intersection. Borings will be advanced to depths of 15 feet bgs.

  Total: Four Roadway and Structural Borings.

- Traffic Control: To be provided per the WisDOT requirements and requirements specified in the Manual on Uniform Traffic Control Devices (MUTCD) to ensure safe working conditions. Flagging crew is anticipated.

- Drilling and sampling for the borings will be conducted in accordance with the Standard Penetration Test Procedure (AASHTO T-206). Sampling and testing of soils will be conducted at every 2.5- foot interval from ground surface to boring terminating depths.

- The field and laboratory tests conducted on soil samples will include tests for the following:

  Field tests
  - Blow counts on all samples, and unconfined compressive strengths using a calibrated pocket penetrometer on cohesive soil samples only.

  Lab tests
  - Moisture content determination [ASTM D2216-05] on all samples (estimated about 20 samples).

- Classify soil using drillers' observations using minimal laboratory testing. A geotechnical engineer/geologist will visually/manually classify the soils to determine the soil type in accordance with the AASHTO and/or Unified Soil Classification System (USCS) [ASTM D2488-93].

- Measure and record groundwater depths during and/or after completion of drilling.

- Abandon /backfill boreholes as per the April 20, 1992 guidelines titled "Wisconsin Department of Transportation Geotechnical Section -Drilled Borehole and Monitoring Well Abandonment Procedures".

- Conduct a survey of as-drilled locations using a GPS device to obtain northing and easting coordinates and ground elevations at boring locations.

- Conduct external stability (sliding, overturing, bearing capacity and settlement) and global stability (rotational) analyses on the proposed extension of retaining wall. One external stability and one global stability analysis will be performed for the wall based on soil information obtained from borings advanced near the highest section of the wall.

- Prepare a geotechnical investigation report that will include the information/design recommendations concerning:

  - Surface, subsurface and groundwater conditions
  - Pavement design parameters based on WisDOT pavement design guidance WisPave as follows:

    - Design Group Index (DGI)
    - Frost Index (FI)
    - Soil Support Value (SSV)
    - Modulus of Subgrade Reaction (k, psi/in)
    - Subgrade Resilient Modulus ($M_{R,\ psi}$)

  - Soil design parameters for short term (undrained) and long term (drained) conditions for the extension of retaining wall
  - External and global stability analyses on the extension of retaining wall
  - Construction considerations.

- Boring logs will be completed for each boring and submitted with the Memorandum as attachments.

- Intertek/PSI will be the drilling subcontractor.

3.0 ASSUMPTIONS

- DAAR to provide the project design (CAD) files if available.

- Drilling and sampling to be accomplished utilizing a conventional truck mounted drilling rig (estimated field drilling operations = 1 day). If borings have to be advanced to deeper depths than estimated for this proposal, Himalayan will contact DAAR to seek approval for additional drilling at such location(s). It is Himalayan's understanding that the extra costs incurred due to

any potential additional drilling and sampling would be addressed through a change order at a later date.

- No rock coring is anticipated as part of the geotechnical investigation.

- The proposal is based on the scope of work outlined above under normal working conditions encountered at the job site and does not take into consideration delays caused by inaccessibility/space constraints, changes in site conditions, inclement weather, sub-freezing temperatures, or other unforeseen circumstances.

4.0 ESTIMATED COSTS

The estimated cost for the scope of work **(Actual Costs plus Fixed Fee not to exceed)** outlined above is **$9,998.39**. The breakdown of the direct labor and non-labor costs is provided in the attached worksheets.

• Himalayan (Geotechnical Engineering)	$6,523.39
• PSI/Intertek (Subconsultant - Drilling Services)	$3,465.00
Total Contract Amount:	**$9,998.39**

5.0 PROJECT SCHEDULE

Himalayan will initiate the investigative activities immediately after your authorization to proceed and complete the geotechnical investigation and report in accordance with the project schedule.

The contract completion date for the project is December 31, 2023.

Himalayan greatly appreciates the opportunity to submit this cost proposal and looks forward to working with you in this and the upcoming projects through their completion. If you have any questions regarding this proposal, please call me at (262) 502-0066.

Sincerely,

HIMALAYAN CONSULTANTS, LLC

Gopal K. Adhikary, P.E.
Senior Geotechnical Engineer

Contract Direct Labor Detail

(a) Employee Name	(b) Classification	(c) Current Rate	(e) New Pay Rate	(f) Date of Increase	(g) % Work at Current Rate	(i) Weighted Average Hourly Rate
Gopal Adhikary	Senior Geotechnical Engineer	$70.00	$70.00	1/1/2023	100.00%	$70.00
Thomas Dueppen	Project Manager	$33.00	$33.00	1/1/2023	100.00%	$33.00
Shardul Sharma	Geotechnical Engineer	$33.00	$33.00	1/1/2023	100.00%	$33.00
Will Lowe	Engineering Technician	$22.00	$22.00	1/1/2023	100.00%	$22.00
Samira Adhikary	Accountant	$35.00	$35.00	1/1/2023	100.00%	$35.00

Contract Completion Date: **12/31/2023**

Summary of Staff Hours and Direct Labor Costs

Project Total

Classification		Senior Geotechnical Engineer		Project Manager		Geotechnical Engineer		Engineering Technician		Accountant			
Avg. Hourly Wage		$70.00		$33.00		$33.00		$22.00		$35.00		Total Direct Labor	
Task	Masterworks Code	Hours	Dollars	Hours	Dollars	Hours	Dollars	Hours	Dollars	Hours	Dollars	Hours	Dollars
Contract Administration	208	1	$70.00	0	$0.00	0	$0.00	0	$0.00	2	$70.00	3	$140.00
Project Management		1	$70.00	2	$66.00	1	$33.00	0	$0.00	0	$0.00	4	$169.00
Geoptechnical Investigation and Report		8	$560.00	2	$66.00	31	$1,023.00	11	$242.00	0	$0.00	52	$1,891.00
TOTAL:	TOTAL:	10	$700.00	4	$132.00	32	$1,056.00	11	$242.00	2	$70.00	59	$2,200.00

Fee Computation Summary by Engineering Task

Project Total

Task	Masterworks Code	Direct Labor Costs	Indirect Costs	Direct Expenses	Fixed Fee	Total
Contract Administration	208	$140.00	$248.50	$0.00	$25.38	$413.88
Project Management		$169.00	$299.98	$0.00	$30.63	$499.61
Geoptechnical Investigation and Report		$1,891.00	$3,356.53	$3,494.63	$342.74	$9,084.90
TOTAL:		$2,200.00	$3,905.01	$3,494.63	$398.75	$9,998.39

Home Office Indirect Cost Rate: **177.50%**

Fixed Fee **7.25%**

Fixed Fee Indirect Cost Rate: **150.00%**

Direct Costs by Item

Item	Unit Amount	Unit Type	Rate	Total Expenses
Miscellaneous Supplies (Paint, wooden stakes, etc.)	1	Site	$15.00	$15.00
Obtain 2 cores of the exiting pavement and advance 4 borings to 10-15 feet per ASTM 1586 including traffic control, moblilation and demobilization	1	Site	$3,465.00	$3,465.00
Mileage - Employee Vehicle	25	Mile	$0.585	$14.63
TOTAL				$3,494.63

Contract Total Fee Computation

Project ID	2430-07-00	Total for Contract
Number of Staff Hours	59	59
Direct Labor Costs	$2,200.00	$2,200.00
Indirect Costs	$3,905.01	$3,905.01
Direct Expenses	$3,494.63	$3,494.63
Fixed Fee	$398.75	$398.75
Subtotal	$9,998.39	$9,998.39
Subconsultant 1 - Intettek/PSI	$0.00	$0.00
Subconsultant 2	$0.00	$0.00
Subtotal	$0.00	$0.00
TOTAL COST	$9,998.39	$9,998.39

Home Office Indirect Cost Rate:	**177.50%**
Fixed Fee Indirect Cost Rate:	**150.00%**
Fixed Fee	**7.25%**

Knight | Barry
TITLE GROUP
Integrity. Experience. Innovation.

Knight Barry Title, Inc.
201 E Pittsburgh Ave, Suite 200
Milwaukee, WI 53204
Tel: (414) 727-4545 Fax: (414) 727-4411
www.knightbarry.com

Email: adam@knightbarry.com

April 22, 2022

DAAR Engineering, Inc.
Attn: Tony Baciak, Jr., P.E.
40 Jewelers Park Drive, Suite 120
Neenah, WI 54956

Re: Washington County – Project ID 2130-13-00/70 STH 60 - Sub Proposal

Dear Tony,

The Knight Barry Title Group is pleased to provide the following services and rate quote for the above-referenced project.

We will provide a DOT-approved Report, which will set forth the record ownership, legal description, mortgage lien and judgment holders, tax status and any easements/restrictions we find recorded since January 1, 1911, affecting the premises. We will also provide a copy of the easements, encumbrances, last deed, maps and tax statements. Please know that searching the railroad records at the State of Wisconsin Office of the Commissioner of Railroads will NOT be included as a part of the searches that will be conducted.

The fee for each report (one report per parcel) will be $500.00 (total of $1,000.00 for two reports), and we will bill $25.00 per written update (total of $50.00 for one update per report), updates will be completed upon request. Total costs not to exceed $1,050.00. Copy costs are included with the cost of the report. We will need four weeks to complete our work. The project completion date is December 31, 2023.

Knight Barry Title Inc.'s Federal Tax ID Number is 39-1338746.

Please contact me with any questions. Thank you for the opportunity to be of service.

Very truly yours,
Knight Barry Title, Inc.

Adam D. Sipe
Chief Title Officer

Stan Lukasz

From: Quirin Klink <qklink@msa-ps.com>
Sent: Friday, April 22, 2022 11:32 AM
To: Ben Wilkinson
Cc: Peter Miesbauer; Beth Steinhauer
Subject: FW: ID 2310-13-00/70 STH 60 - Village of Jackson Roundabout-Appraisal Estimate-Zarem

Ben, here is the Quote from Metropolitan Appraisal to forward to DAAR. This is for the two appraisals.

From: Kevin Zarem <kzarem@metropolitan-ap.com>
Sent: Friday, April 22, 2022 10:46 AM
To: Peter Miesbauer <pmiesbauer@msa-ps.com>; Beth Steinhauer <bsteinhauer@msa-ps.com>
Cc: Quirin Klink <qklink@msa-ps.com>
Subject: RE: ID 2310-13-00/70 STH 60 - Village of Jackson Roundabout-Appraisal Estimate-Zarem

Hey Peter,

I looked back at a few 3rd party contractor sign rebuild estimates. It looks like a complex bid might run as high as $750. So to play it safe, I'd assume an additional $1,500 for the two sign bids.

Therefore, the two full narrative before and after appraisals would cost $8,500, and the two sign bids would cost an additional $1,500 ($10,000 total) if we are responsible for the bids.

Please let me know if you need any other information.

Thanks,

Kevin Zarem, MAI
Metropolitan Appraisal

(262) 240-9600
kzarem@metropolitan-ap.com

-----Original Message-----
From: Beth Steinhauer <bsteinhauer@msa-ps.com>
Sent: Thursday, April 21, 2022 2:00 PM
To: Kevin Zarem <kzarem@metropolitan-ap.com>
Cc: Peter Miesbauer <pmiesbauer@msa-ps.com>; Quirin Klink <qklink@msa-ps.com>
Subject: FW: ID 2310-13-00/70 STH 60 - Village of Jackson Roundabout
Importance: High

Good Afternoon Kevin,
We were just contacted by DAAR for Road design for the proposed single lane roundabout at STH 60 and Eagle Drive intersection for a project in the Village of Jackson.

1. RIGHT OF WAY ACQUISITION

a. Assume up to two Fee & TLE parcels to acquire, on the southwest and southeast quadrants. Assume the north side of STH 60 has enough existing right of way with the existing vision triangle boundaries.
b. Assume both are commercial properties, with impact to each property's business sign, along with a small portion of each parking lot. For this reason, and the timeframe, an appraisal is included for each parcel for valuation.

Schedule-
Plat Sep 16, 2022 (by DAAR)
- RE Acquisition Complete (MSA) 4/4/23
- Final PSE 5/1/23
- LET 9/2023
- Construction April 2024

- We are looking for a cost for 2 appraisals.
Please let us know the type of appraisal you would prepare for each of the properties.
If a Review Appraiser is required, who would you suggest?

It would be great if you could provide a cost for the 2 appraisals this afternoon, if possible.
Please let us know if you have questions.

Thank you!
Beth

Beth Steinhauer | Real Estate Acquisition Professional MSA Professional Services, Inc.
100% Employee Owned
+1 (608) 242-6622

Stan Lukasz

From: Quirin Klink <qklink@msa-ps.com>
Sent: Friday, April 22, 2022 11:34 AM
To: Ben Wilkinson
Cc: Peter Miesbauer; Beth Steinhauer
Subject: FW: ID 2310-13-00/70 STH 60 - Village of Jackson Roundabout

Ben, here is the Quote from Valbridge Property Advisors for the Review Appraisals, to forward to DAAR.

From: S. Steven Vitale <svitale@valbridge.com>
Sent: Friday, April 22, 2022 9:50 AM
To: Peter Miesbauer <pmiesbauer@msa-ps.com>
Cc: Quirin Klink <qklink@msa-ps.com>; Beth Steinhauer <bsteinhauer@msa-ps.com>
Subject: RE: ID 2310-13-00/70 STH 60 - Village of Jackson Roundabout

Beth,
I spoke with Peter this morning. While some issues remain open, I can provide a basic fee quote. I would anticipate the two reviews would not exceed 15 hours of my time. At a rate of $185 per hour, the cost would not exceed $2,775. Timing is dependent on backlog when reviews arrive, but should be within two weeks of receipt. Let me know if this is acceptable and if you have any questions. Thanks!

S. Steven Vitale, MAI, SGA
Senior Managing Director
Valbridge Property Advisors I Milwaukee
12660 W. North Avenue
Brookfield, WI 53005
Office: 262-782-7990
Cell: 262-227-9277
svitale@valbridge.com
valbridge.com

Valbridge
PROPERTY ADVISORS

-----Original Message-----
From: Beth Steinhauer <bsteinhauer@msa-ps.com>
Sent: Thursday, April 21, 2022 4:16 PM
To: S. Steven Vitale <svitale@valbridge.com>
Cc: Quirin Klink <qklink@msa-ps.com>; Peter Miesbauer <pmiesbauer@msa-ps.com>; Kevin Zarem- Metropolitan (kzarem@metropolitan-ap.com) <kzarem@metropolitan-ap.com>
Subject: FW: ID 2310-13-00/70 STH 60 - Village of Jackson Roundabout

Good Afternoon Steve,
I have previously met you at IRWA gatherings. I am in the Madison Office with MSA Professional Services, Inc.

Kevin Zarem suggested I contact you for appraisal review services for a roundabout project.
We were contacted by DAAR for Road design for the proposed single lane roundabout at STH 60 and Eagle Drive intersection for a project in the Village of Jackson.

1. RIGHT OF WAY ACQUISITION

a. Assume up to two Fee & TLE parcels to acquire, on the southwest and southeast quadrants. Assume the north side of STH 60 has enough existing right of way with the existing vision triangle boundaries.

b. Assume both are commercial properties, with impact to each property's business sign, along with a small portion of each parking lot. For this reason, and the timeframe, an appraisal is included for each parcel for valuation.

Schedule-
Plat Sep 16, 2022 (by DAAR)
- RE Acquisition Complete (MSA) 4/4/23
- Final PSE 5/1/23
- LET 9/2023
- Construction April 2024

Kevin will prepare (2) full narrative b4 and after appraisals for the Jackson Chiropractic site and the Piggly Wiggly site.

Please let us know if you are interested in providing a cost for the 2 appraisal reviews.

It would be great if you could provide a cost for the 2 appraisal reviews this week, if possible.
Please let us know if you have questions.

Thank you!
Beth

Please copy Quirin Klink and Peter Miesbauer on your response.

Beth Steinhauer | Real Estate Acquisition Professional MSA Professional Services, Inc.
100% Employee Owned
+1 (608) 242-6622

Work Order for DAAR Engineering, Inc.

WisDOT Project ID:	2310-13-00
Site:	STH 60 Ph 2/2.5
City / County:	Village of Jackson / Washington
Highway and Termini (when applicable):	Eagle Drive Roundabout
Total Estimated Cost:	$11,528

Timetable for completion:

Project Element	Due by date
Complete Phase 2/2.5 Field Work	6/3/22
Draft Phase 2/2.5 Report & HazMat Special Provisions to DAAR	7/8/22
Receive WDNR Concurrence with HazMat Special Provisions	9/2/22

Scope of Services:

Complete Phase 2/2.5 subsurface investigation for the above-referenced project. Prepare Phase 2/2.5 Report and, if necessary, Hazmat Special Provisions.

Assumptions:

- Distance from Ramboll (Milwaukee Office) to site (round-trip, per MapQuest): 64 miles
- Number of planned soil probe borings to 10' bgs: 3
- Number of contingency soil probe borings to 10' bgs: 4
- Soil samples per boring: 3
- Number of planned geoprobe temporary wells: 1
- Groundwater samples per temporary well: 1
- Estimated time on-site for soil logging and sampling: 1 personnel for 1 days
- Collected samples will be analyzed for the parameters listed below at standard turnaround (5-10 business days based on laboratory availability).
- Village of Jackson and WisDOT will not require permits or charge permitting fees for this project; no permit fees are included herein.

Task	Contract Manager	Project Supervisor	Scientist	CAD/GIS	Administrative
	$60.33	$45.52	$35.95	$32.87	$27.47
Update Site Health and Safety Plan			1		
Obtain/Review Background Info & Prep for Field Work	2	2	3	2	
Field Work / Sample Prep / Decon		3	12		
Investigative Waste Management Coordination		1			
Report / Specials Preparation	2	12	4	4	2
Coordinate WDNR Review/Concurrence w/ Special Provisions	1				
Project Management	3	2			
	8	20	20	6	2
	$483	$910	$719	$197	$55

Total Consultant Labor Costs:		$2,364
Overhead:	163%	$3,854
Profit:	9%	$560

Direct Expenses	Quantity	Unit	Unit Price	Total
Truck	1	day	$132	$132
PID	1	day	$75	$75
Miscellaneous Field Supplies	1	each	$100	$100
GPS Unit	1	day	$125	$125
Lunch	1	lunch	$10	$10

Total Expenses: $442

Subcontractor	Subcontract Services	Cost basis / Unit Price	Rate	Cost
On-Site Environmental Services, Inc.	Soil Probing & Bore Hole Abandonments	1	$1,480.00	$1,480.00
Q3	Traffic Control	1	$1,380.85	$1,380.85
TestAmerica	Soil Sample Analytical Testing Standard Turn-Around Time			
	Soil :PVOCs	21	$55	$1,155
	Soil Composite: DRO	1	$30	$30
	Groundwater: PVOCs	1	$55	$55
	Groundwater: RCRA Metals, plus Copper, Molybdenum, Nickel, and Zinc	1	$75	$75
	Groundwater: Cyanide	1	$25	$25
	Groundwater: Hexane Extractable Materials (HEM)	1	$50	$50
	Soil: Sample Disposal	23	$2.5	$58

Total Subcontractor Costs: $4,308

Estimated Total Project Costs: $11,528

Signature of Ramboll — Date: 4/22/2022

Signature of DAAR — Date

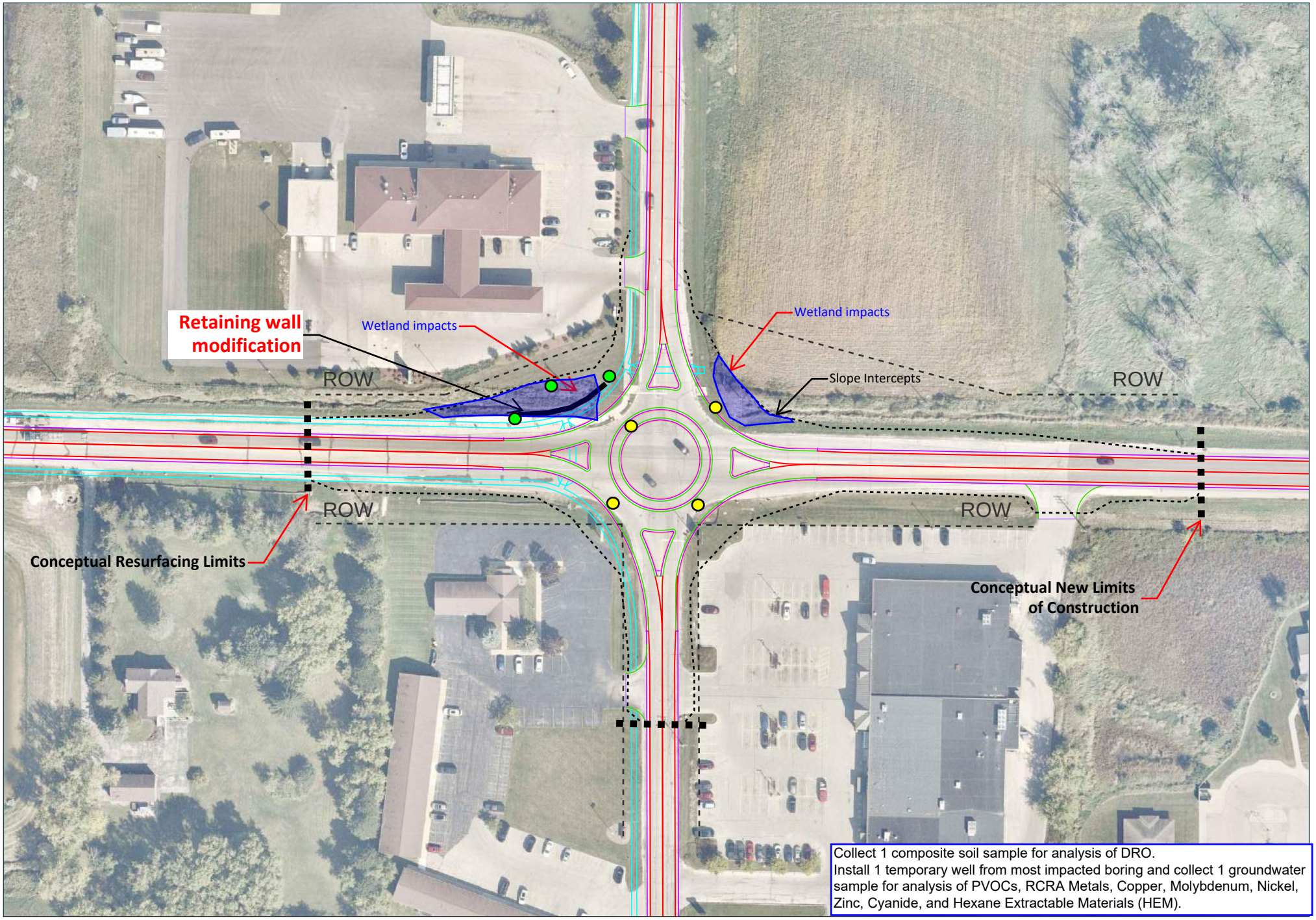

SRF

WIS 60 & Eagle Drive Roundabout Design

Eagle Drive ICE Analysis

Village of Jackson, WI

Planned 10' boring. Collect 3 discrete soil samples for analysis of PVOCs.

Contingency 10' boring. If advanced, collect 3 discrete soil samples for analysis of PVOCs.

Figure 3

UNIVERSITY of WISCONSIN
UWMILWAUKEE

Archaeological Research Laboratory Center

Cultural Resource Management

Sabin Hall, Rm 290
PO Box 413
Milwaukee, WI
53201-0413
414-229-3078
www.uwm.edu
www.uwm.edu/archaeology-laboratory/

April 20, 2022

Stan Lukasz, P.E.
Project Manager
DAAR Engineering
325 E. Chicago St.
Suite 400
Milwaukee, WI 53202
Direct: 414-935-4360
Office: 414-225-9817

RE: Amendment 2
Section 106
Archaeological and Architectural/Historical Investigations
Project ID 2310-13-00
STH 60 USH 45 to Eagle Drive
Washington County, Wisconsin
UWM-CRM 2020-0034

Dear Mr. Lukasz,

The Cultural Resource Management program (Archaeological Research Laboratory Center) at the University of Wisconsin-Milwaukee (UWM) is pleased to offer a scope of work and estimated cost to conduct additional cultural resource investigations for the above referenced project.

Changes have been made to the proposed project, consisting of the addition of a roundabout at the intersection of STH 60 and Eagle Drive. This addition requires an update to the architecture history investigations, as well as the addition of archaeological investigations.

Scope of Services

Archaeological Investigations
The archaeological study will consist of archives and literature research and field investigations. The archival research will identify all previously reported archaeological sites both within the area of potential effect (i.e. all areas of proposed ground disturbing activities) and within a one mile radius of the area of potential effect (APE). The archival research will also document locales within the APE that have already been subjected to archaeological survey. Field investigations will consist of intensive Phase I archaeological survey of the APE using visual inspection and/or shovel probe testing for those areas not subjected to prior archaeological survey.

Preliminary research indicates there is one previously recorded archaeological site, WT-0348 Field Site 11.070-03, coincident with the additional project area.

Architecture History Investigations

Additional scope for architecture history will consist of a review of the previous investigations, and an updated memo pertaining to the revised area of potential effect.

Reporting

The results of the cultural resources investigations will be documented using standard WisDOT reporting forms for archaeological and architectural/historical studies:

- Archaeological Survey Field Report Form (ASFR) (DT1978)
- Archaeological Literature and Records Review Form (DT1459)
- Architecture History Update Memo
- DT1635 Section 106 Form (relevant portions)

The Section 106 report package will be submitted to DAAR and the WisDOT Cultural Resources Team (CRT) for review and comment. Once accepted by WisDOT CRT, the package will be submitted to SHPO for concurrence.

Costs

The cost for the work is a lump sum of $3,105.00.

Please note that the cost assumes that no significant archaeological materials will be encountered during the work and does not include evaluation studies for archaeological sites.

The official institution name used in contracts, grants, and other official agreements is: The Board of Regents of the University of Wisconsin System on behalf of the University of Wisconsin-Milwaukee. If awarded, we respectfully request the ability to negotiate the terms and conditions from the sponsor. Please note that as an agency of the State of Wisconsin and an academic institution the following conditions are required:

1. We are self-insured under secs. 895.46, 893.82 and 20.505(2)(k) of the Wisconsin Statutes.
2. We are not permitted, by law, to indemnify or defend any sponsor.
3. We require the right to publish or use information, data, writings, or materials resulting from research for educational and research purposes.

If you would like a copy of our standard research agreement to review our language in more detail, please feel free to visit UWM Standard Terms and Conditions.

If there are questions or concerns regarding the scope of work, or to further discuss the project, please do not hesitate to contact me at (414) 251-8566 or at jlpicard@uwm.edu.

Sincerely,

DocuSigned by:
Anne Kissack
EAF78419E79F4DE...

Jennifer L. Picard
Principal Investigator

Anne Kissack
Contracts Specialist, Office of Sponsored Programs

Attachment 1: Cost Estimate

University of Wisconsin-Milwaukee
Cultural Resource Management

BUDGET ESTIMATE 2020-0034
AMENDMENT 2
Project ID 2310-13-00
STH 60 USH 45 to Eagle Drive
Washington County, Wisconsin
Archaeology and Architecture/History Investigations
April 2022

DIRECT COSTS

A: SALARIES & WAGES

	PERSONNEL											
	Senior				LTE				Students			
TASK	Title	$/hr	Hrs	Total$	Title	$/hr	Hrs	Total$	Title	$/hr	Hrs	Total$
Coordination & Administration	Princip. Investigator - II	38.86	8	310.88								
Architecture History Survey, AHSF	Historian	26.29	8	210.32								
Archaeological Investigations & Report	Sr. Proj Mgr	28.79	20	575.80	Supvsr 1	19	8	152.00				
	Project Manager	26.29	0	0.00								
	GIS Analyst	25.73	8	205.84								
SUBTOTAL LABOR$				1302.84				152.00				0.00

TOTAL LABOR$ 1454.84

B: FRINGE BENEFITS

36% of Senior Personnel	469.02
10.0% of LTE Personnel	15.20
0.9% of Student Personnel	0.00
TOTAL FRINGE BENEFITS	484.22

C: SUPPLIES & EXPENSES

Supplies		0.00
Meals	0 person day @$51/day	0.00
Lodging	0 person day @$82/day	0.00
Vehicle Rental & Gasolin	1 $65/day	65.00
Repository Fee		25.35
TOTAL SUPPLIES		90.35

D: TOTAL DIRECT COSTS	(A + B + C)	2029.41
E: INDIRECT COSTS	(D X .53)	1075.59
TOTAL PROJECT COSTS	(D + E)	$3,105.00

VILLAGE OF JACKSON

Taking the lead in Washington County.

March 04, 2022

Brian Kober, Director of Public Works

RE: Accounts with uncollectible balances

Attached are the histories of six (6) accounts that have remained unpaid due to Bankruptcy, death or have moved from the Village with no way to contact them.

1.) Account #000-4221-00, located at N168W21700 Main St. #17 in the amount of $614.82. This person had filed for Bankruptcy (2018) and no longer resides in the Village, and we have no forwarding address. We have no way of collecting the past due amount through Property Taxes or a landlord.

2.) Account #000-5089-01, located at N162W19361 Oakland Dr. in the amount of $2,138.97. They had an Order of Discharge in the Bankruptcy filing (2019).

3.) Account #000-4091-00, located at N168W21700 Main St. #227 in the amount of $131.26. The resident had moved from the Village in 2019. I have mailed letters on 1/8/20, 4/14/20, 7/28/20 & 4/16/21 to the forwarding address, with no response. We have no way of collecting the past due amount through Property Taxes or a landlord or garnishment.

4.) Account #000-4225-00, located at N168W21700 Main St. #13 in the amount of $740.37. They have passed away (2021) and we have no way of collecting the past due amount through Property Taxes or a landlord. Water is off currently. Home to be junked.

5.) Account #000-4032-00, located at N168W21700 Main St. #137 in the amount of $270.65. They have passed away and we have no way of collecting the past due amount through Property Taxes or a landlord. Water is off currently. Home to be junked.

6.) Account #000-4135-00, located at N168W21700 Main St. #127 in the amount of $131.43. They have passed away and we have no way of collecting the past due amount through property taxes or a landlord. Water is off currently. Home to be junked.

We have no way of collecting these past due amounts that total $4,027.50, so I am asking to write off these balances to get them out of the system.

Sincerely,

Carla Leach

Water Utility Clerk

W194N16660
Eagle Drive
Jackson, WI 53037
Phone: 262-677-0707
Fax: 262-677-8770

Mailing Address:
P.O. Box 637

www.villageofjackson.com

1.

Post Date: From: 1/01/2018 Account Nbr: From: 000-4221-00 Group Cd: From:
Thru: 12/31/2019 Thru: 000-4221-00 Thru:

Account Nbr: 000-4221-00 Name:

					Running Balance
	12/31/2017 - Balance:				489.96
Post Date	Trans Date	Type	Trans ID	Amount	
2/06/2018	2/06/2018	Late Charge		4.90	494.86
2/09/2018	2/08/2018	Receipt	200102	-489.96	4.90
3/06/2018	3/06/2018	Late Charge		0.04	4.94
3/31/2018	4/15/2018	Bill		276.22	281.16
4/06/2018	4/06/2018	Late Charge		0.04	281.20
5/08/2018	5/08/2018	Late Charge		2.81	284.01
6/07/2018	6/07/2018	Late Charge		2.84	286.85
6/27/2018	6/27/2018	Adjustment	LATE FEE	30.00	316.85
6/29/2018	6/28/2018	Receipt	204608	-286.85	30.00
7/06/2018	7/15/2018	Bill		201.82	231.82
7/10/2018	7/10/2018	Late Charge		0.20	232.02
8/07/2018	8/06/2018	Late Charge		2.33	234.35
9/05/2018	9/05/2018	Late Charge		2.34	236.69
9/26/2018	9/26/2018	Adjustment	SHUT OFF FEE	30.00	266.69
10/05/2018	10/15/2018	Bill		333.65	600.34
10/08/2018	10/08/2018	Late Charge		2.37	602.71
5/08/2019	5/08/2019	Late Charge		6.02	608.73
8/07/2019	8/07/2019	Late Charge		6.09	614.82
					==========
	000-4221-00 - Ending Balance:				614.82

2.

2/11/2022 11:14 AM

Account History - Summary
ALL Transactions

Post Date: From: 1/01/2019 Thru: 12/31/2019
Account Nbr: From: 000-5089-01 Thru: 000-5089-01
Group Cd: From: Thru:

Account Nbr: 000-5089-01 Name:

					Running Balance
	12/31/2018 - Balance:				1,847.79
Post Date	Trans Date	Type	Trans ID	Amount	
1/07/2019	1/07/2019	Late Charge		14.74	1,862.53
2/06/2019	2/06/2019	Late Charge		18.63	1,881.16
3/05/2019	3/05/2019	Late Charge		18.81	1,899.97
4/02/2019	4/02/2019	Late Charge		19.00	1,918.97
4/03/2019	4/15/2019	Bill		399.02	2,317.99
5/08/2019	5/08/2019	Late Charge		23.18	2,341.17
6/06/2019	6/06/2019	Late Charge		23.42	2,364.59
6/13/2019	6/13/2019	Receipt	218605	-500.00	1,864.59
7/05/2019	7/05/2019	Late Charge		18.64	1,883.23
7/08/2019	7/15/2019	Bill		382.22	2,265.45
8/07/2019	8/07/2019	Late Charge		22.65	2,288.10
9/05/2019	9/05/2019	Late Charge		22.88	2,310.98
9/13/2019	9/13/2019	Receipt	222117	-310.98	2,000.00
10/07/2019	10/07/2019	Late Charge		20.00	2,020.00
10/08/2019	10/15/2019	Bill		367.04	2,387.04
11/05/2019	11/05/2019	Receipt	224236	-310.98	2,076.06
11/06/2019	11/06/2019	Late Charge		20.76	2,096.82
11/15/2019	11/15/2019	T-Roll Penalty	10.00%	168.90	2,265.72
11/15/2019	11/15/2019	Tax Roll		-1,857.92	407.80
12/03/2019	12/03/2019	Adjustment	REVERSE TAX	1,689.02	2,096.82
12/05/2019	12/05/2019	Late Charge		20.97	2,117.79
12/31/2019	1/15/2020	Bill		~~318.92~~	~~2,436.71~~
					==========
	000-5089-01 - Ending Balance:				~~2,436.71~~

Late fee Added 1/5/20 $21.18

Total $2,138.97

3

Post Date: From: 1/01/2019 Account Nbr: From: 000-4091-00 Group Cd: From:
Thru: 12/31/2019 Thru: 000-4091-00 Thru:

Account Nbr: 000-4091-00 Name:

12/31/2018 - Balance:

Post Date	Trans Date	Type	Trans ID	Amount	Running Balance
					154.86
2/02/2019	2/02/2019	Receipt	CC 0202	-155.00	-0.14
4/03/2019	4/15/2019	Bill		164.66	164.52
5/05/2019	5/05/2019	Receipt	CC 0505	-165.00	-0.48
7/08/2019	7/15/2019	Bill		157.91	157.43
8/05/2019	8/05/2019	Receipt	CC 0805	-160.00	-2.57
10/08/2019	10/15/2019	Bill		169.02	166.45
10/18/2019	10/18/2019	Receipt	CC 1018	-166.45	0.00
11/22/2019	11/22/2019	Bill		131.26	131.26
					==========
	000-4091-00 - Ending Balance:				131.26

4.

Post Date: From: 1/01/2021 Account Nbr: From: 000-4225-00 Group Cd: From:
Thru: 2/11/2022 Thru: 000-4225-00 Thru:

Account Nbr: 000-4225-00 Name:

12/31/2020 - Balance: 333.12

Post Date	Trans Date	Type	Trans ID	Amount	Running Balance
1/06/2021	1/06/2021	Late Charge		1.09	334.21
2/08/2021	2/08/2021	Late Charge		2.18	336.39
3/08/2021	3/08/2021	Late Charge		2.21	338.60
4/06/2021	4/06/2021	Late Charge		2.23	340.83
4/07/2021	4/15/2021	Bill		134.34	475.17
5/06/2021	5/06/2021	Late Charge		3.60	478.77
6/07/2021	6/07/2021	Late Charge		3.63	482.40
7/07/2021	7/07/2021	Late Charge		3.67	486.07
7/08/2021	7/15/2021	Bill		98.88	584.95
8/06/2021	8/06/2021	Late Charge		4.69	589.64
9/08/2021	9/08/2021	Late Charge		4.73	594.37
9/22/2021	9/22/2021	Adjustment	RECONNECT	30.00	624.37
10/06/2021	10/06/2021	Late Charge		4.80	629.17
10/06/2021	10/15/2021	Bill		98.88	728.05
11/08/2021	11/08/2021	Late Charge		6.13	734.18
12/06/2021	12/06/2021	Late Charge		6.19	740.37

000-4225-00 - Ending Balance: 740.37

5.

Post Date: From: 1/01/2021 Account Nbr: From: 000-4032-00 Group Cd: From:
Thru: 2/11/2022 Thru: 000-4032-00 Thru:

Account Nbr: 000-4032-00 Name:

12/31/2020 - Balance:

Post Date	Trans Date	Type	Trans ID	Amount	Running Balance
					189.53
2/08/2021	2/08/2021	Late Charge		1.90	191.43
3/02/2021	3/02/2021	Receipt	241599	-191.43	0.00
4/07/2021	4/15/2021	Bill		191.47	191.47
5/03/2021	5/03/2021	Receipt	243723	-191.47	0.00
7/08/2021	7/15/2021	Bill		158.10	158.10
7/20/2021	7/20/2021	Receipt	245869	-158.10	0.00
10/06/2021	10/15/2021	Bill		155.98	155.98
11/08/2021	11/08/2021	Late Charge		1.57	157.55
12/06/2021	12/06/2021	Late Charge		1.58	159.13
12/07/2021	12/07/2021	Bill		111.52	270.65
					==========
	000-4032-00 - Ending Balance:				270.65

6.

Post Date: From: 1/01/2022 Account Nbr: From: 000-4135-00 Group Cd: From:
Thru: 3/04/2022 Thru: 000-4135-00 Thru:

Account Nbr: 000-4135-00 Name:

					Running Balance
	12/31/2021 - Balance:				137.10
Post Date	Trans Date	Type	Trans ID	Amount	
2/08/2022	2/08/2022	Late Charge		1.38	138.48
2/11/2022	2/11/2022	Bill		70.71	209.19
3/02/2022	3/02/2022	Receipt		-77.76	131.43
					==========
	000-4135-00 - Ending Balance:				131.43

Memo

To: Brian Kober

From: Jeff L. Deitsch

CC: **Chad Russ**

Date: 04/20/2022

Re: Televising north and south interceptor sewers

The Village has received bid prices for the televising of the north and south interceptor sewers. It is about 39,204 ft or about 7.4 miles of sewer to be televised. If there is any Light cleaning involved, it will be an extra cost if we can' t provide cleaning with our Jetter. I have received service quotes from three venders as follows

The Expediters, Inc

On Road - 17,969 ft x $1.04 = $18,687.00

Off Road estimate – 21,235ft = $32,267.00

Total = $50,954.00

Visu-Sewer

On Road - 17,969 ft x $1.04 = $18,687.00

Off Road – 21235 ft x $1.60 = $33,976.00

Total = $52,663.00

Great Lakes TV Seal Inc.

On Road & Off-Road Total - $26,183.30

I would recommend Great Lakes TV Seal Inc.

S:\JEFF\interceptor 2022.doc

Sanitary Sewer Map
Jackson, Wisconsin

9/10/2012

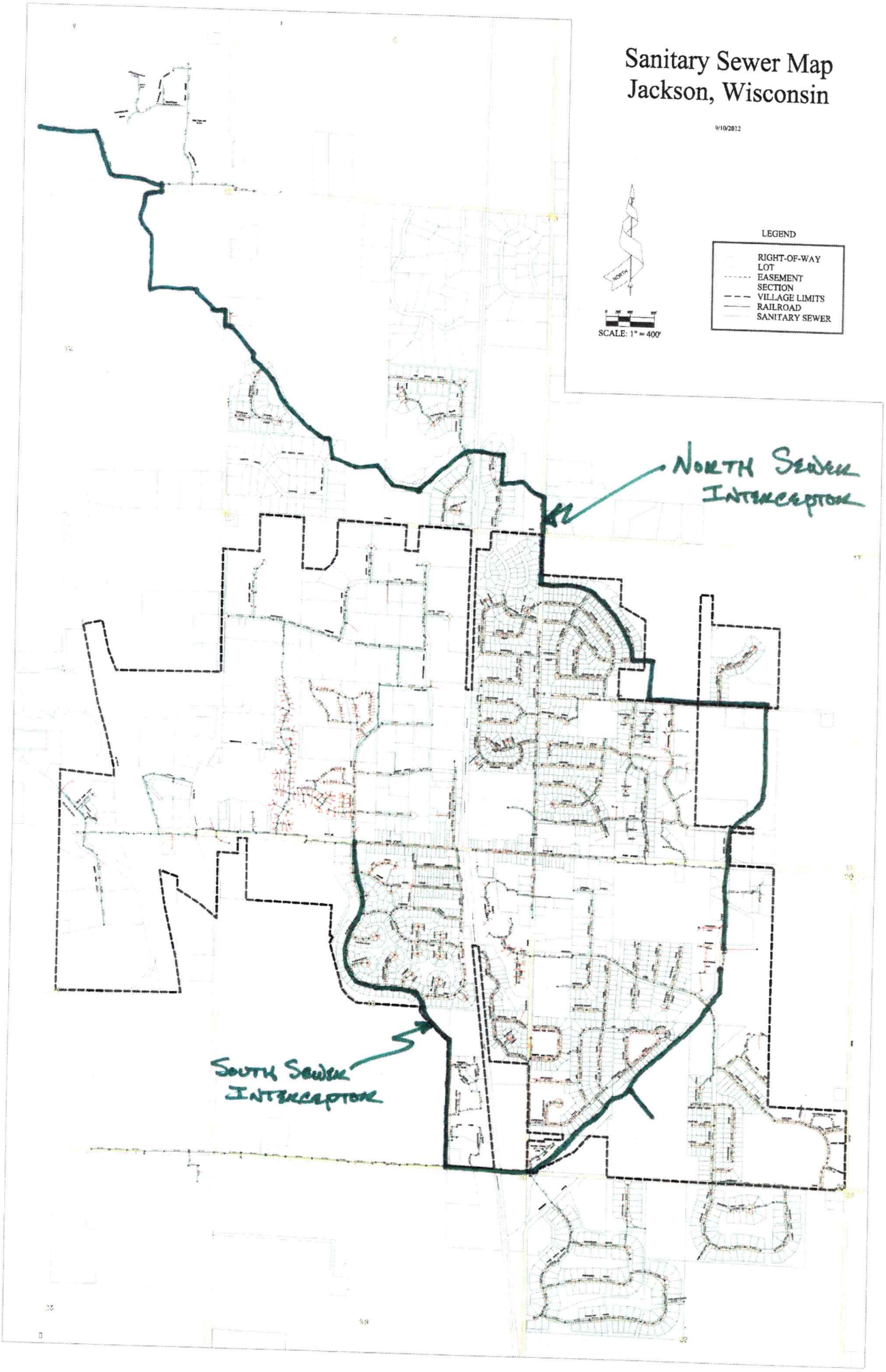

The Expediters, Inc.

QUOTATION

CUSTOMER: Village of Jackson

QUOTE DATE: 3-2-22

CONTACT: Jeff Deitsch

PROJECT: 2022 Sanitary Sewer Interceptor Cleaning & Televising

WORK DESCRIPTION: Clean & Televise 39,204' LF of 12"-36 Sanitary Sewer Interceptor

QUOTE: Clean & Televise 17,969' LF of 18"-36" Sanitary Sewer Interceptor in Roadway @ $3.24 Per Linear Foot. Televising Price $1.04 Per Linear Foot. Cleaning Price $2.20 Per Linear Foot

Clean & Televise 21,235' LF of 12"-30" Sanitary Sewer Interceptor in Easements @ $550.00 Per Hour. (It is estimated this work will take 176 hours to complete) This price includes Vactor Truck, Water Truck, Tracked Easement Machine & Easement Mats.

***Village to provide hydrant water and dump site for sewer cleaning**
***Village to cut any brush, trees, grass-weeds to access manholes in easements**

Thank you for the opportunity to bid this work. If you have any questions, please feel free to call us at 1-800-657-0879.

Sincerely,
The Expediters, Inc.

Peter J. Muchka

CUSTOMER SIGNATURE:

139 N. Main St. Dousman, WI. 53118
Phone 800-657-0879 Fax 800-261-3582
theexpediters@aol.com

Visu-Sewer
Inspect. Maintain. Rehabilitate.

Proposal

To: Jeff Deitsch
Village of Jackson
W194N16660 Eagle Dr
Jackson, WI 53037
262-677-0707

From: Drew Setzer
Visu-Sewer, Inc.
W230N4855 Betker Dr.
Pewaukee, WI 53072
262-695-2640

Date: 4/14/2022 **Project:** Interceptor Sanitary Sewer CCTV Inspection - Jackson, WI

Visu-Sewer is pleased to offer the following service:

CCTV inspection of approximately 17,969 linear feet of 12-36" road accessible sanitary sewer interceptor mains and approximately 21,235 linear feet of 12-36" easement sanitary sewer interceptor mains for the Village of Jackson, WI. The proposal cost includes video data, inspection reports with PACP codes & defect still photos. If needed, light cleaning, root cutting, removal of protruding taps, and/or reaming of mineral deposits will be completed at $275.00 per hour for on road sewers, and $385.00 per hour for off road sewers (port to port). Heavy cleaning will be quoted individually if needed.

Price:
On Road Access - $1.04 per linear foot
(Based on a minimum of 17,900 linear feet)
Off Road Easement Access - $1.60 per linear foot
(Based on a minimum of 21,000 linear feet)
Reverse set-ups if needed due to debris in pipe - $175.00 Each

The Village of Jackson shall provide access, and any private landowner coordination to allow access, to all manholes, water for our jet truck from nearby hydrants (if needed & without charge), a dump site for captured debris (if needed), and any required traffic control beyond cones and signs. Visu-Sewer will provide labor and equipment to complete the project.

Thank you for the opportunity to quote this project. If you have any questions, please do not hesitate to contact us at 262-695-2340.

All material guaranteed to be as specified. All work to be completed in a substantial workmanlike manner according to specifications submitted, per standard practices. Any alteration or deviation from above specifications involving extra costs will be executed only upon written orders, and will become an extra charge over and above the estimate. All agreements contingent upon strikes, accidents or delays beyond our control. Owner to carry fire, tornado and other necessary insurance. Our workers are fully covered by Workmen's Compensation Insurance. This proposal may be withdrawn if not accepted within 30 days of issue. Time and material rates are charges "port to port". Terms - Net 30 days.

Acceptance of Proposal

The above prices, specifications and conditions are satisfactory and are hereby accepted. Visu-Sewer, Inc. is authorized to do the work as specified.

Date: _____ Signature: _____

Great Lakes TV SEAL INC.
3600 Kewaunee Road
Green Bay, WI 54311
Phone: (920)863-3663
Fax: (920)863-3662

Quotation

Quote Number
18468

Quote Date
Apr 1, 2022

Quoted to:

VILLAGE OF JACKSON
N168 W20733 Main Street
P.O. Box 637
Jackson, WI 53037

Quote Good Thru	Payment Terms	Sales Rep
5/1/22	Net 30 Days	

Description	Unit of Measure	Quantity	Unit Price	Extension
2022 SANITARY INTERCEPTOR TELEVISING	.			
MOBILIZATION/DEMOBILIZATION - TV UNIT AND CREW (ONE TIME MOBILIZATION CHARGE)	L SUM	1.00	560.000	560.00
12" PVC / OFF ROAD / GOOD ACCESS	FOOT	6,209.00	0.720	4,470.48
15" PVC / OFF ROAD / FAIR TO DIFFICULT ACCESS	FOOT	7,301.00	0.720	5,256.72
18" PVC / ON ROAD	FOOT	1,277.00	0.580	740.66
18" RCP / ON ROAD	FOOT	5,946.00	0.580	3,448.68
18" RCP / OFF ROAD / GOOD ACCESS	FOOT	628.00	0.580	364.24
21" RCP / ON ROAD	FOOT	3,416.00	0.580	1,981.28
21" RCP / OFF ROAD FAIR ACCESS	FOOT	2,530.00	0.720	1,821.60
24" RCP / ON ROAD	FOOT	5,207.00	0.580	3,020.06
30" RCP / ON ROAD	FOOT	1,713.00	0.580	993.54

Please notify Great Lakes within 30 days if the quotation is accepted and the above prices will be honored.
This acknowledgment will enable us to schedule your work more efficiently.

If prevailing wages apply - this quote will be adjusted accordingly. Bond fee and/or additional insurance requirements are not included in the quote amount. If applicable, add the amount(s) to this quote.

Subtota	Continued
Sales Ta	Continued
Tota	Continued

Great Lakes TV SEAL INC.

3600 Kewaunee Road
Green Bay, WI 54311
Phone: (920)863-3663
Fax: (920)863-3662

Quotation

Quote Numbe
18468

Quote Date
Apr 1, 2022

Quoted to:

VILLAGE OF JACKSON
N168 W20733 Main Street
P.O. Box 637
Jackson, WI 53037

Quote Good Thru	Payment Terms	Sales Rep
5/1/22	Net 30 Days	

Description	Unit of Measure	Quantity	Unit Price	Extension
30" RCP / OFF ROAD / FAIR TO DIFFICULT ACCESS	FOOT	4,567.00	0.720	3,288.24
36" RCP / ON ROAD	FOOT	410.00	0.580	237.80
QUANTITIES ARE ESTIMATED, ACTUAL QUANTITIES WILL BE INVOICED	.			
WE WILL DO OUR BEST TO COMPLETE THIS WORK IN A TIMELY FASHION. OUR PRESENT WORK LOAD IS ALREADY BRINING US INTO THE FALL SEASON AND	.			
TIMELINES ARE CONTINUOUSLY GETTING EXTENDED DUE TO LACK OF PARTS AND SUPPLIES.	.			

Please notify Great Lakes within 30 days if the quotation is accepted and the above prices will be honored.
This acknowledgment will enable us to schedule your work more efficiently.

If prevailing wages apply - this quote will be adjusted accordingly. Bond fee and/or additional insurance requirements are not included in the quote amount. If applicable, add the amount(s) to this quote.

Subtota	26,183.30
Sales Ta	
Tota	26,183.30