AGENDA
BOARD OF PUBLIC WORKS MEETING
Tuesday, February 23, 2021 at 7:00 p.m.
Jackson Village Hall
N168 W20733 Main Street
Jackson, WI 53037

1. Call to Order and Roll Call

2. Approval of the Board of Public Works Minutes of January 26, 2021

3. TIF #6 – Rosewood Lane & Sylvester Court Additional Construction Cost

4. Review of License Agreement to Farm Public Land – Robert Loduha

5. Pay Request #4 - 2020 Road and Utility Project – Wondra Construction

6. Pay Request #6 - Spruce St & Ridgeway Drive Extension - TIF#7

7. Review of RFP for Fiber Internet to Village of Jackson Buildings

8. Review of RFP for New Phone System for Village of Jackson Buildings

9. Review of RFP for Sewer Interceptor and Water Main Study by City Water

10. Review of MOU with WisDOT for Ridgeway Drive and STH 60

11. Director of Public Works Report

12. Citizens/Village Staff to address the Board

13. Adjourn

Persons with disabilities requiring special accommodations for attendance at the meeting should contact the Village Hall at least one (1) business day prior to the meeting.

It is possible that members of the Village Board may attend the above meeting. No action will be taken by any governmental body at this meeting other than the governmental body specifically referred to in this meeting notice. This notice is given so that members of the Village Board may attend the meeting without violating the open meeting law.

DRAFT Minutes
Board of Public Works Meeting
Tuesday, January 26, 2021 at 7:00 p.m.
Jackson Village Hall
N168 W20733 Main Street

1. Call to Order and Roll Call
Chair Tr. Olson called the meeting to order at 7:00 p.m.
Members Present: Tr. Heckendorf, Tr. Lippold, Tim Meffert, Steve Schoen and Gloria Teifke
Member Excused: Sarah Malchow
Staff Present: Jen Keller, Brian Kober and Jilline Dobratz

2. Approval of the Board of Public Works Minutes of November 24, 2020
Motion by Tr. Lippold, second by Tr. Olson to approve the Board of Public Works minutes of November 24, 2020.
Vote: 6 ayes, 0 nays. Motion carried.

3. Pay Request #3 – 2020 Road and Utility Project – Wondra Construction
Brian Kober commented a portion of the project is being retained for the completion of landscaping. Streetlights fixtures are being scheduled for installation.
Motion by Tr. Heckendorf, second by Gloria Teifke to recommend Budget & Finance and Village Board approve Pay Request #3 – 2020 Road and Utility Project – Wondra Construction in the amount of $130,430.40.
Vote: 6 ayes, 0 nays. Motion carried.

4. Pay Request #5 – Spruce Street & Ridgeway Drive Extension – TIF #7
Brian Kober gave background information on the project.
Motion by Tr. Olson, second by Tr. Lippold to recommend Budget & Finance and Village Board approve Pay Request #5 – Spruce Street & Ridgeway Drive Extension – TIF #7 in the amount of $240,567.24.
Vote: 6 ayes, 0 nays. Motion carried.

5. RFP for 2021 Willow Ridge Drive Reconstruction Project
Brian Kober reviewed the proposals for engineering services. Storm sewer laterals would be put in for all homes. Gremmer & Associates and Cedar Corp. submitted proposals. The low bidder was Cedar Corp. The construction area consists of Willow Ridge Drive from Hunters Road to Ridgeway Drive and removal of the Chateau Drive dead end.
Motion by Tr. Olson, second by Tr. Lippold to recommend Budget & Finance and Village Board approve the engineering services contract to Cedar Corp. for the 2021 Willow Ridge Drive Reconstruction Project in the amount of $23,500.00 plus incidental costs (mileage, printing, etc.).
Vote: 6 ayes, 0 nays. Motion carried.

6. TIF #6 – Rosewood Lane & Sylvester Court Additional Construction Costs

Brian Kober explained the project and the additional construction costs that were not billed. The work has been completed. An error was made from initial calculations.
Motion by Tr. Olson, second by Tr. Lippold to table TIF #6 – Rosewood Lane & Sylvester Court Additional Construction Costs to the February Board of Public Works meeting.
Vote: 6 ayes, 0 nays. Motion carried.

7. Review of Morning Meadows Subdivision Phase 2
Brian Kober gave information on Phase 2 of Morning Meadows. Utilities have been approved for the subdivision. A preconstruction meeting will be held on February 9th. There is a creek crossing in the plan. They received a Chapter 30 from the DNR for two creek crossings to balance out the site. The final plat for Phase 1 of the subdivision is on the Plan Commission agenda for January 28, 2021.

8. Review of RFP for Sewer Interceptor and Water Main Study by City Water
Brian Kober stated the RFP was unavailable and this will be on the February agenda.

9. Review of 2021 Trash and Recycling Contracts
Brian Kober reviewed the new contract with GLF for trash and recycling collection services. Spring Clean-up Day is scheduled for Saturday, April 24, 2021 from 9:00 a.m. until 12:00 p.m. at Department of Public Works.

10. Discussion of Village Informational Signs
Brian Kober stated there is no new information. He will reach out to the DOT on the 2024 Main Street resurfacing project regarding replacing the streetlights and adding informational signs.
Motion by Tr. Olson, seconded by Tr. Lippold to remove this item from the agenda and add to the Director of Public Works Report, Highway 60 corridor.
Vote: 6 ayes, 0 nays. Motion carried.

11. Director of Public Works Report
Brian gave the report. Plowing and street salt procedure was discussed.
Motion by Tr. Lippold, second by Tr. Olson to place the Director of Public Works Report on file.
Vote: 6 ayes, 0 nays. Motion carried.

12. Citizens/Village Staff to Address the Board
Brian Kober welcomed the two new members of the Board of Public Works, Tim Meffert and Steve Schoen.

13. Adjourn.
Motion by Tr. Lippold, second by Tim Meffert to adjourn.
Vote: 6 ayes, 0 nays. Meeting was adjourned at 8:16 p.m.

Respectfully submitted,

Jilline Dobratz, *CMC/WCMC*
Village Clerk

DRAFT

Brian Kober

From: Brad Abraham <Brad.Abraham@washcowisco.gov>
Sent: Friday, January 15, 2021 8:46 AM
To: Brian Kober
Subject: FW: Rosewood Lane and Sylvester Court
Attachments: 0217_001.pdf; 0216_001.pdf; 0212_001.pdf; 0211_001.pdf; Revised - Rosewood Tiff Breakdown.pdf; Cost estimate.pdf; 2018-5_CTH P_Design2Construct_TypeC_approved.pdf; 0736_001.pdf

Follow Up Flag: Follow up
Flag Status: Flagged

Brian,

As a follow up to our phone conversation earlier this morning, the email I sent back on 11/16/20 had line item breakdowns for Sylvester and Rosewood. I am resending those so you have them. I also combined two of the documents into one for more clarity. (0736_001.pdf)

Please let me know if these are what you need or if you need something more.

Thanks,

WASHINGTON COUNTY
WISCONSIN
DISCOVER. CONNECT. PROSPER

BRAD A. ABRAHAM
Project Engineer
E: brad.abraham@washcowisco.gov
O: (262) 335-4437
C: (262) 808-3057
F: (262) 335-4439

Washington County Highway Department
900 Lang Street
West Bend, Wi 53090

@WashcoWisco

From: Brad Abraham
Sent: Monday, November 16, 2020 9:50 AM
To: Brian <dirpubwks@villageofjackson.com>; James Blise <JBlise@design2construct.com>
Subject: Rosewood Lane and Sylvester Court

Brian/Jim,

Here is the additional information that was requested regarding the work at Rosewood Lane and Sylvester Court. If you should have any more questions, please let me know and I would be happy to help.

I revised the numbers due to an error on my end from the first calculations. The totals are as follows:

Rosewood Lane

$45,156.68

Sylvester Court (Subgrade Stabilization)
$35,862.03

I laid out a narrative on the work that was performed at each location for clarity. I hope this will give you the information that you need to present to your board for approval.

Rosewood Lane

The attached spreadsheet and worksheet pdfs show the full construction cost and item breakdowns for creating the turn lane and upgraded access from CTH P. Unit prices shown on the spreadsheet are from the competitive bidding process that was performed for Washington County's CTH P project from STH 60 to Woodland Road, in the Village and Town of Jackson. The lowest bidder, Michels Construction, was awarded the bid and completed the work for the county in the summer of 2018.

Items above and beyond the typical cross section of a roadway were itemized and quantified in order to achieve a cumulative total that would be charged to the Village of Jackson. During the construction project, an engineer conducted proof roll with a fully loaded quadaxle dump truck (typical) was used to determine failing subgrade soil areas. The method of: performing excavation below subgrade (EBS) of the existing poor, non-weight bearing soils, installation of geogrid and breaker run rock were used to stabilize the failed subgrade locations. Washington County was also impacted by these conditions and was required to stabilize their adjacent section of CTH P with the same stabilization methods.
These additional quantities are added into the spreadsheet and are reflected in the specific bid items.

Sylvester Court

Gremmer and Associates provided an estimate (see attached) for the additional items that would be required to construct the turn lane and bypass lane for Sylvester Court prior to the project's commencement. This estimate was provided to the developer, Design 2 Construct, and the Village of Jackson. A check for the amount shown on the estimate was cut to Washington County at that time.

The attached calculations show the additional costs that were incurred in order to stabilize the poor soils that were encountered during construction of the turn lane and bypass lane at Sylvester Court. The same process and method described in the above section for Rosewood Lane, was used for identifying and correcting poor soils at this location. The soils encountered consisted of loamy topsoil in some areas, as well as continuously saturated silty sands. An underground spring or a perched water table was encountered in this location, creating a need for additional subgrade stabilization. Washington County was also impacted by these conditions and was required to stabilize their adjacent section of CTH P with the same stabilization methods. These additional quantities are shown in the attached calculations. The prices for the specific bid items from the contract were used and applied to the quantities that were measured and verified in the field by the Washington County Project Engineer, Brad Abraham.

BRAD A. ABRAHAM
Project Engineer
E: brad.abraham@washcowisco.gov
O: (262) 335-4437
C: (262) 808-3057
F: (262) 335-4439

Washington County Highway Department
900 Lang Street
West Bend, Wi 53090

@WashcoWisco

DISCOVER. CONNECT. PROSPER.

The information in this email, and any attachments, may contain confidential information. Use and further disclosure must be consistent with applicable laws. However, if you believe you've received this email in error, delete it immediately and do not use, disclose or store the information it contains.

Notice the change of domain name from co.washington.wi.us to washcowisco.gov We are changing our domain name to washcowisco.gov, please update your records to reflect this change. For the time being, access to the old domain name will remain seamless.

APPLICATION & PERMIT TO CONSTRUCT OR MODIFY ACCESS WITHIN WASHINGTON COUNTY TRUNK HIGHWAY RIGHT-OF-WAY

(Revised 1/26/18)

WASHINGTON COUNTY WISCONSIN

***PLEASE REVIEW WASHINGTON COUNTY'S ACCESS CONTROL POLICY BEFORE SUBMITTING A PERMIT**

APPLICANT INFORMATION

Identify if you own the land to be accessed or if you are a contractor performing work for the landowner: ⦿ Landowner ○ Contractor

Name: Design 2 Construct Development Corporation

Mailing Address: N173 W21010 Northwest Passage Way

City: Jackson State: WI Zip: 53037

Phone: (262) 677-9933

Fax: (262) 677-9934

Email: jkeuper@design2construct.com

THIS SECTION IS TO BE COMPLETED BY THE HIGHWAY DEPARTMENT

PERMIT NUMBER:

Access # 18-5

Payment submitted with this application:

$ 51,815.21 $250 permit fee $51,565.21 deposit

*Select preferred method of contact upon approval or denial (check one)

○ Mail ○ Fax ⦿ Email

LOCATION OF ACCESS

Address (if applicable): W220 N17066 CTH P, Jackson, WI 53037 (Previous farmstead)

Side of County Trunk Highway ○ North ○ South ⦿ East ○ West

1200/890 feet ⦿ North ⦿ South ○ East ○ West of intersection with Rosewood Lane/Northwest Passage

Municipality: ○ Town ⦿ Village ○ City of Jackson Parcel ID#: 008700 E/F/G/H

Estimated Start Date: 5/14/2018 Estimated Completion and Restoration Date: 11/2/2018

TYPE OF ACCESS (identify which type of access you are applying for - select one)	**Permit Fees** (nonrefundable)	**Deposit Required**
○ **Paving of Existing Access, Temporary Access, Relocation or Other Modifications**	$50.00	$250.00
○ **Field Entrance**	$50.00	$250.00
○ **Type "A" Access** Residential driveways and private roads serving less than 5 residential units	$75.00	$250.00
○ **Type "B" Access** Residential developments of 5-20 units and commercial, industrial, and institutional developments of 25,000 square feet or less	$250.00	$25,000.00
⦿ **Type "C" Access** Residential developments of more than 20 units, commercial, industrial, and institutional developments of 25,000 square feet or more	$250.00	$51,565.21 ~~$25,000.00~~

Fill out the appropriate space, if applicable: Size of commercial, industrial, or institutional development
(Building facilities only): >25,000 SF square feet or number of residential dwellings: N/A unit(s)

***APPLICANT MUST REVIEW ALL ADDITIONAL PROVISIONS LISTED ON THE FOLLOWING PAGE AND PROVIDE SIGNATURE**

THIS SECTION IS TO BE COMPLETED BY THE HIGHWAY DEPARTMENT

Permit Application Approved / Denied — ☒ **Approved** ○ **Denied** **If approved, expiration date of permit:** 10/31/18

Special Provisions: $51,565.21 is an estimated cost. Applicant will be billed according to actual costs incurred during construction as part of Wash Co's CTH P improvement project. Construction outside of this project must occur either before asphalt is stripped from P OR after gravel base is placed and approved for vehicular travel.

Joshua Klara — Signature of Authorized Representative

Project Technician — Title

5/17/18 — Date

ADDITIONAL PERMIT PROVISIONS

1. The entire cost of installing and maintaining the driveway or field entrance (including any culvert) shall be the financial responsibility of the applicant.
2. All personnel (private or contractors) who are working within the road rights-of-way must wear an ANSI approved safety apparel meeting ANSI class 2 or 3 requirements.
3. The applicant shall call Digger's Hot Line and any other underground utility prior to the commencement of excavation or filling.
4. A 18 inch diameter culvert pipe, 138 feet in length, shall be installed under the driveway to provide proper drainage along the highway (culverts must be a minimum of 18 inches in diameter and a minimum of 28 feet in length).
5. Culverts shall be installed with apron endwalls. Apron endwalls with wheel guards shall be used if the culvert diameter is 24 inches or greater.
6. Culvert materials are restricted to corrugated steel, concrete and corrugated polyethylene pipe (HDPE), meeting AASHTO M 294, Type S specifications.
7. Width of driving surface requested 36 (f/f) feet (Note: Driving surface width must be between 16 and 24 feet for Type "A" accesses and field entrances; Driving surface width must be between 24 and 36 feet for Type "B" AND Type "C" accesses; Culverts, where required by the Transportation Committee, shall be twenty-eight (28) feet long for Type "A" accesses, field entrances, temporary accesses and forty (40) feet long for Type "B" OR Type "C" accesses.
8. Culverts shall be laid on bedding of ¾-inch road gravel and shall be backfilled with ¾-inch road gravel.
9. Driveway grades shall be placed in a manner to maintain a pitch of one-half (1/2) inch per foot away from the roadway to the center of the ditch flow line (e.g. 4%) except in curb and gutter sections.
10. The area within 10 feet of a property line shall be a restricted area over which no access may be developed.
11. All new driveways shall be constructed to have permanently vegetated slopes sides, unless the street has curb and gutter. Such construction shall be accomplished using only soil materials. The slopes of the driveway shall be sloped at no more than a length to height ratio of 4:1. All slopes shall be seeded or sod by the property owner.
12. The applicant and/or their contractor shall restore the highway right-of-way to the satisfaction of the Highway Commissioner or his designated representative as soon as possible.
13. During the performance of work described within this permit, the applicant and/or their contractor shall have a fully signed and executed copy of this permit on site. A copy of the permit shall be shown to County forces upon request. Failure to do so will cause this permit to become null and void and work shall not be completed unless authorized through a subsequent permit.
14. Traffic control shall be accordance with Part VI of the Manual of Uniform Traffic Control Devices (MUTCD). Traffic control during construction shall be altered at anytime upon a request from the Washington County Highway Department or any law enforcing agency.
15. This permit grants an access onto a County Trunk Highway as detailed in the Washington County Access Control Policy. Any future change in use shall require a subsequent permit.
16. This permit does not guarantee a full movement access. In the future, a raised median may be constructed on the highway which may limit this drive to right in/right out movement only. There will be no compensation for the restriction of movement at any access point.
17. The applicant is responsible for obtaining any other County, Town or DNR permit required.
18. No concrete surface shall be allowed within the highway right-of-way except in curb and gutter sections. Retaining walls are **prohibited.**
19. Reimbursement of the deposit will be granted upon the installation of the access and restoration of the County highway right-of-way to the satisfaction of the Highway Commissioner or his designated representative for Type A accesses. Deposits for a Type B and C accesses will be held for one year from the **date of acceptance.**
20. Pavement Markings shall be installed by the Contractor per S.D.D.15C8 sheet B, C & D: Pavement Marking (Intersections) or at the discretion of the Highway Commissioner.
21. Any person obtaining a permit who fails to comply with the conditions of the permit, prior to the permit's expiration date, shall forfeit any permit deposit.
22. All access permits shall expire six (6) months after approval unless an extension is requested in writing and approved by the Highway Commissioner.
23. The applicant agrees to hold harmless and indemnify Washington County, its officers, agents and employees against any loss or damage for any personal injury or property damage sustained by reason of the exercise of this permit. **The terms and conditions contained in the Washington County Access Control Policy are agreed to by the applicant.**
24. If application is denied, the applicant may appeal the decision through the Public Works Committee for a nonrefundable fee of **$100.**

Signature of Applicant

4/19/2018

Date

102969

DESIGN 2 CONSTRUCT DEVELOPMENT CORPORATION
JACKSON, WI 53037

5962 Washington Cty Hwy Dept

DATE	INVOICE NO.	DESCRIPTION	INVOICE AMOUNT	DEDUCTION	BALANCE
4-24-18	20180424	Jackson Property De	250.00	.00	250.00
CHECK DATE 4-24-18	CHECK NUMBER 102969	TOTALS	250.00	.00	250.00

DESIGN 2 CONSTRUCT DEVELOPMENT CORPORATION
N173 W21010 NORTHWEST PASSAGE WAY
JACKSON, WI 53037 • TEL: 262-677-9933

HORICON STATE BANK
WEST BEND, WISCONSIN 53095
79-562 / 759

102969

Pay: **********Two hundred fifty dollars and no cents

DATE	CHECK NO.	AMOUNT
April 24, 2018	102969	$********250.00

PAY TO THE ORDER OF
Washington Cty Hwy Dept
Attn: Josh Glass
900 Lang Street
West Bend, WI 53090

⑈102969⑈ ⑆075905622⑆ 0000100 15⑈

RECEIPT DATE 5/17/18 No. 575510

RECEIVED FROM Design 2 Construct $ 250.00

Two Hundred Fifty Dollars and 00/100 DOLLARS

○ FOR RENT
☒ FOR Access Permit #18-5 (Check #102969)

ACCOUNT		
PAYMENT	250	00
BAL. DUE		

○ CASH
☒ CHECK
○ MONEY ORDER
○ CREDIT CARD

FROM ____ TO ____

BY Joshua M Glass

103174

DESIGN 2 CONSTRUCT DEVELOPMENT CORPORATION
JACKSON, WI 53037

5962 Washington Cty Hwy Dept

DATE	INVOICE NO.	DESCRIPTION	INVOICE AMOUNT	DEDUCTION	BALANCE
5-17-18	20180517	Jackson Property De	51565.21	.00	51565.21
CHECK DATE 5-17-18	CHECK NUMBER 103174	TOTALS	51565.21	.00	51565.21

DESIGN 2 CONSTRUCT DEVELOPMENT CORPORATION

N173 W21010 NORTHWEST PASSAGE WAY
JACKSON, WI 53037 • TEL: 262-677-9933

HORICON STATE BANK
WEST BEND, WISCONSIN 53095

79-562
759

103174

Pay: *********Fifty-one thousand five hundred sixty-five dollars and 21 cents

DATE	CHECK NO.	AMOUNT
May 17, 2018	103174	$*****51,565.21

PAY TO THE ORDER OF

Washington Cty Hwy Dept
Attn: Josh Glass
900 Lang Street
West Bend, WI 53090

⑈103174⑈ ⑆075905622⑆ 1000010015⑈

RECEIPT DATE 5/17/18 **No.** 575511

RECEIVED FROM Design 2 Construct $51,565.21

Fifty One Thousand Five Hundred Sixty Five Dollars and 21/100 DOLLARS

○ FOR RENT
⊗ FOR Access Permit #18-5 Deposit (Check # 103174)

ACCOUNT		
PAYMENT	51,565	21
BAL. DUE		

○ CASH
⊗ CHECK
○ MONEY ORDER
○ CREDIT CARD

FROM _____ TO _____

BY Joshua Glass

Sylvester Circle Additional Costs

Owner: Washington County Highway Department
Project Name: CTH P Reconstruction
STH 60 to Canyon Drive
Project No.: HWY 18-07

Sylvester Circle Turn & Bypass Lanes

				Michels Corporation	
Item No.	Item	Quantity	Unit	Unit Price	Total
205.0100	Excavation Common	450.00	CY	$ 7.93	$ 3,568.50
305.0110	Base Aggregate Dense 3/4-Inch	(90.00)	TON	$ 16.85	$ (1,516.50)
305.0120	Base Aggregate Dense 1 1/4-Inch	225.00	TON	$ 7.47	$ 1,680.75
305.0130	Base Aggregate Dense 3-Inch	545.00	TON	$ 9.19	$ 5,008.55
416.0160	Concrete Driveway 6-Inch	12.00	SY	$ 47.25	$ 567.00
455.0605	Tack Coat	140.00	GAL	$ 1.90	$ 266.00
460.6223	HMA Pavement 3 MT 58-28 S	345.00	TON	$ 48.50	$ 16,732.50
460.6224	HMA Pavement 4 MT 58-28 S	135.00	TON	$ 50.50	$ 6,817.50
465.0315	Asphaltic Flumes	24.00	SY	$ 95.00	$ 2,280.00
521.1018	Apron Endwalls for Culvert Pipe Steel 18-Inch	2.00	EACH	$ 175.00	$ 350.00
521.3118	Culvert Pipe Corrugated Steel 18-Inch	138.00	LF	$ 45.00	$ 6,210.00
601.0553	Concrete Curb & Gutter 4-Inch Sloped 36-Inch Type D	580.00	LF	$ 17.00	$ 9,860.00
625.0500	Salvaged Topsoil	(310.00)	SY	$ 1.50	$ (465.00)
627.0200	Mulching	520.00	SY	$ 0.15	$ 78.00
628.2004	Erosion Mat Class I Type B	(830.00)	SY	$ 0.95	$ (788.50)
628.7555	Culvert Pipe Checks	3.00	EACH	$ 10.00	$ 30.00
628.7570	Rock Bags	(95.00)	EACH	$ 5.00	$ (475.00)
629.0210	Fertilizer Type B	(0.50)	CWT	$ 50.00	$ (25.00)
630.0120	Seeding Mixture No. 20	(26.00)	LB	$ 4.95	$ (128.70)
630.0140	Seeding Mixture No. 40	3.00	LB	$ 4.95	$ 14.85
630.0200	Seeding Temporary	(13.00)	LB	$ 2.00	$ (26.00)
633.5200	Markers Culvert End	2.00	EACH	$ 50.00	$ 100.00
634.0614	Posts Wood 4x6-Inch X 14-FT	1.00	EACH	$ 55.00	$ 55.00
637.2210	Signs Type II Reflective H	5.18	SF	$ 17.00	$ 88.06
646.1020	Marking Line Epoxy 4-Inch	(70.00)	LF	$ 0.24	$ (16.80)
646.3020	Marking Line Epoxy 8-Inch	150.00	LF	$ 1.00	$ 150.00
646.6120	Marking Stop Line Epoxy 18-Inch	30.00	LF	$ 7.00	$ 210.00
650.5500	Construction Staking Curb Gutter and Curb & Gutter	580.00	LF	$ 1.50	$ 870.00
650.6000	Construction Staking Pipe Culverts	1.00	EACH	$ 70.00	$ 70.00
			TOTAL		$ 51,565.21

Friday, June ~~FORK~~ 8th

May 27 - June 17

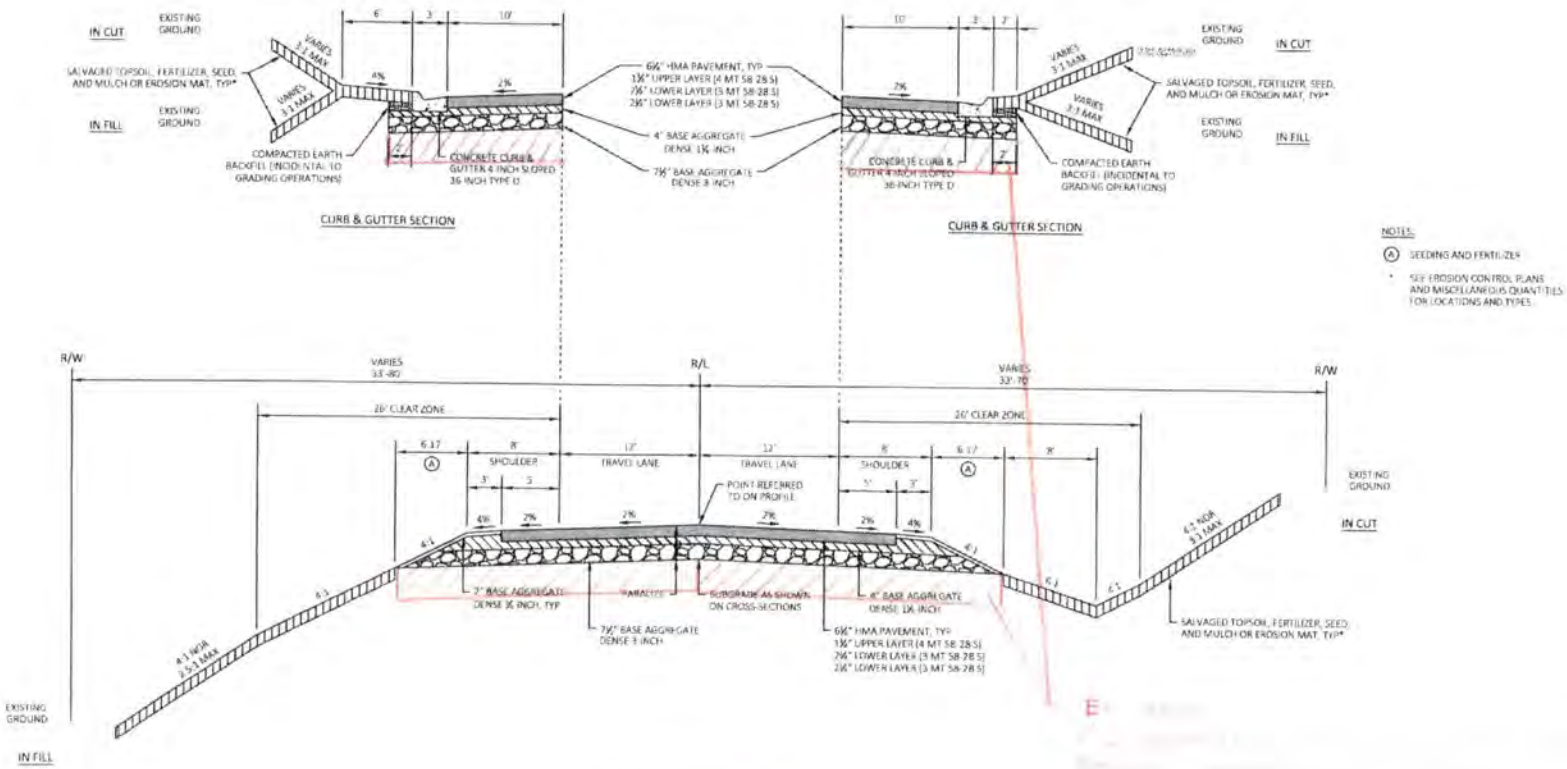

NOTES:

(A) SEEDING AND FERTILIZER

* SEE EROSION CONTROL PLANS AND MISCELLANEOUS QUANTITIES FOR LOCATIONS AND TYPES.

TYPICAL FINISHED SECTION

CTH P (HMA ALT)

STA 639+50 - STA 695+00

PROJECT NO: HWY 18-07	HWY: CTH P	COUNTY: WASHINGTON	TYPICAL SECTIONS	SHEET 6	E

FILE NAME: S:\CD\WASHINGTON\CTH P\DESIGN\ROADWAY\PLANS\18-07-TS.DWG

LAYOUT NAME: TYPICAL

PLOT DATE: 2/8/2018 1:29 PM PLOT BY: AARON.SASALUKA PLOT NAME: PLOT SCALE: 1 IN:10 FT

WISDOT/CADDS 9.4 FILE

2

Property of Washington County

MATCH LINE STA 639+75

640 641 642 643 644 645 646

EXISTING R/W

STA 643+36.01
=STA 50+00.00

CURB & GUTTER 4-INCH SLOPED 36-INCH TYPE D

CURB & GUTTER 4-INCH SLOPED 36-INCH TYPE D

CTH P

3" ASPHALTIC SURFACE FOR DRIVEWAYS

ASPHALTIC FLUME

RADIUS POINT
STA 642+65.41; 84.00' RT

STA 50+82.55, 75.00' RT
Y=486913.230
X=2433868.445

50+82.55
15.00' RT

50+61.35
15.00' LT

50+71.55
15.00' LT

50+82.55
15.00' LT

CONCRETE SURFACE DRAIN

RADIUS POINT
STA 643+86.68; 64.00' RT

STA 50+61.55, 55.00' LT
Y=486560.675
X=2433892.631

ROSEWOOD LANE

51+27.55
6.00' LT

51+85.68
6.00' RT

52+50.00
6.00' RT

52+50.00
6.00' LT

6" BASE AGGREGATE DENSE 3/4-INCH

MATCH LINE

STA AHEAD = 642+00.00
STA BACK = 646+98.76

NOTES

ALL CURB RADI ARE TO FLANGE OF CURB & GUTTER.

ALL ROADWAY DIMENSIONS ARE TO FLANGE OF CURB & GUTTER.

ALL DATA POINT STATION AND OFFSETS ARE TO THE FLANGE OF CURB & GUTTER OR FRONT OF WALK.

PAVEMENT GRADES ARE SHOWN AT THE FLANGE OF CURB & GUTTER.

PAVEMENT GRADES ARE GENERALLY SHOWN AT 25' INTERVALS.

LEGEND

- XXX.XX PROPOSED ELEVATIONS
- (XXX.XX) EXISTING ELEVATIONS
- PROPOSED CATCH BASIN/INLET
- PROPOSED STORM SEWER MANHOLE
- PROPOSED ENDWALL
- PROPOSED SANITARY SEWER MANHOLE
- PROPOSED HYDRANT
- PROPOSED WATER VALVE
- PROPOSED LIGHT POLE

PROJECT NO: HWY 18-07	HWY: CTH P	COUNTY: WASHINGTON	PLAN DETAILS	SHEET 21	E

FILE NAME: C:\SOURPROD\WASHINGTON\CTH P\HWY 18\CTH P\SHEETS\PLANS\HW021001.DGN
LAYOUT NAME: Sheet 01
PLOT DATE: 7/9/2018 1:07:19 PM
PLOT BY: AARON SARAUER
PLOT NAME:
PLOT SCALE: 1 IN:20 FT
WSDOT/LADD SHEET 4J

LEGEND

- XXX.XX PROPOSED ELEVATIONS
- (XXX.XX) EXISTING ELEVATIONS
- CONCRETE CURB & GUTTER TRANSITION
- DATA POINT
- PROPOSED CATCH BASIN/ INLET
- PROPOSED STORM SEWER MANHOLE
- PROPOSED ENDWALL
- PROPOSED SANITARY SEWER MANHOLE
- PROPOSED HYDRANT
- PROPOSED WATER VALVE

NOTES

ALL CURB RADII ARE TO FACE OF CURB

ALL ROADWAY DIMENSIONS ARE TO FACE OF CURB OR JOINT LINE

ALL DATA POINT STATION AND OFFSETS ARE TO THE FACE OF CURB OR FRONT OF WALK.

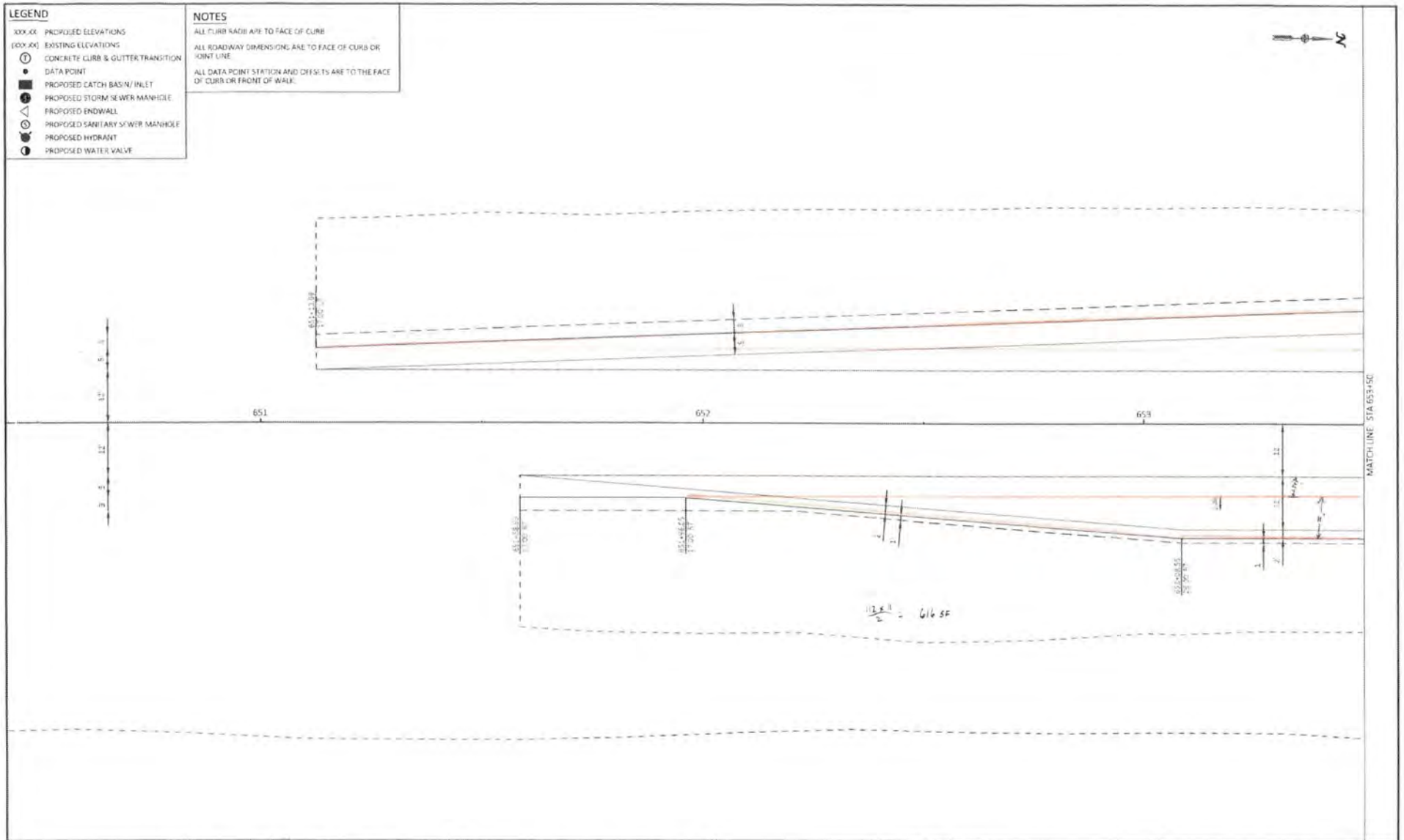

Revisions:	Job No: 17-00213	Designed: JAC Date: 5/16/2018	GREMMER & ASSOCIATES, INC.	95 South Pioneer Road, Suite 300 Fond du Lac, WI 54935 (920) 924-5720 fax (920) 924-5725	DESIGN 2 CONSTRUCT NORTHWEST BUSINESS PARK - PHASE 6 JACKSON, WI	PLAN DETAILS	SHEET 13 / 83
	Date: 5/16/2018	Drawn: AJS Date: 5/16/2018					
		Checked: TLL Date: 5/16/2018					

FILE NAME: S:\JURAMEN\SITEPLAN\DESIGN2CONSTRUCT\CIVIL3D\WEPA\SHEETS\PLAN\NWBP6_021202-PD.DWG
LAYOUT NAME - Sheet-01

PLOT DATE: 5/16/2018 9:29 AM PLOT BY: AARON SARAUER PLOT SCALE: 1 IN 20 FT

NOTES

ALL CURB RADII ARE TO FACE OF CURB.

ALL ROADWAY DIMENSIONS ARE TO FACE OF CURB OR JOINT LINE.

ALL DATA POINT STATION AND OFFSETS ARE TO THE FACE OF CURB OR FRONT OF WALK.

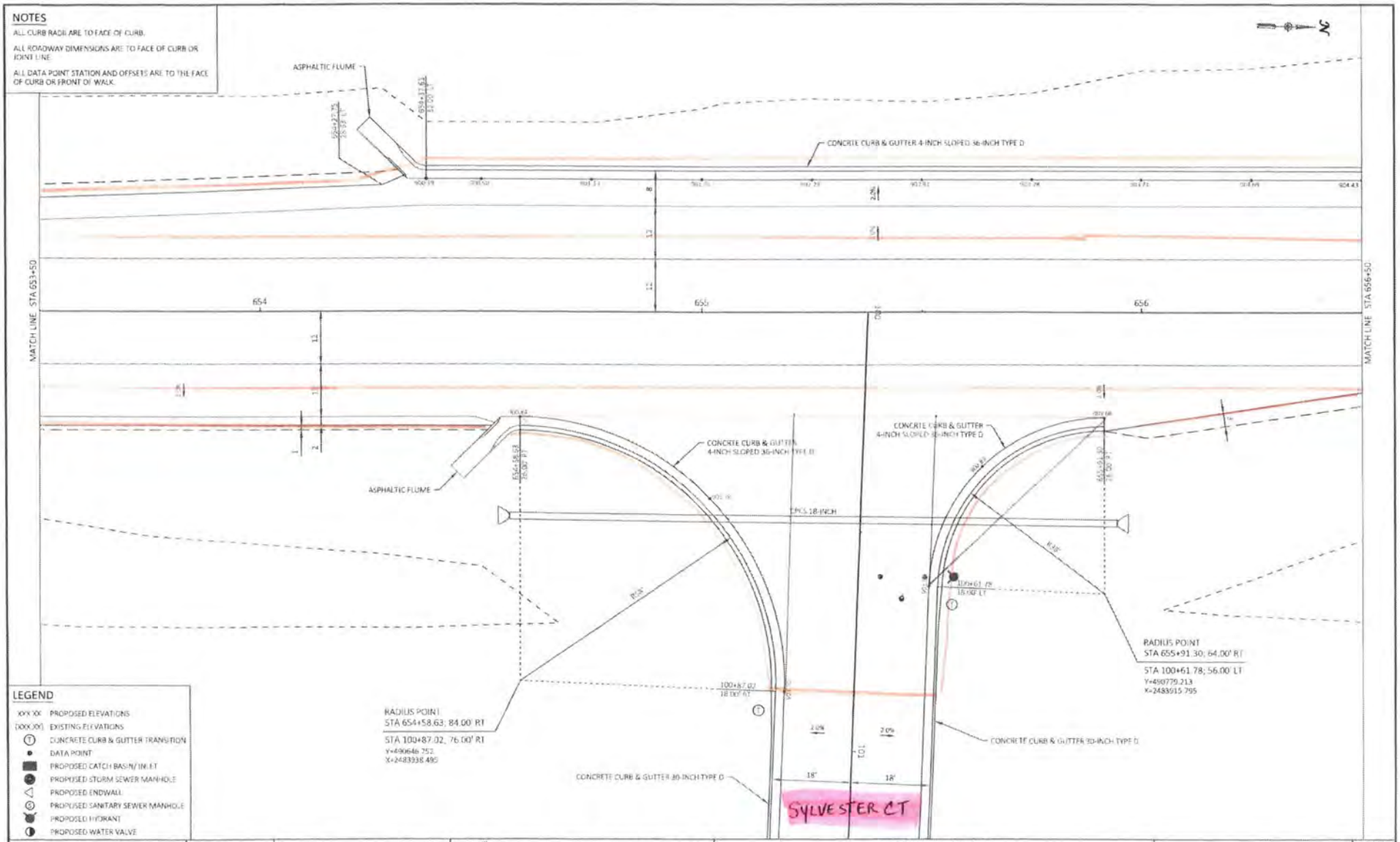

LEGEND

- XXX.XX PROPOSED ELEVATIONS
- (XXX.XX) EXISTING ELEVATIONS
- CONCRETE CURB & GUTTER TRANSITION
- DATA POINT
- PROPOSED CATCH BASIN/INLET
- PROPOSED STORM SEWER MANHOLE
- PROPOSED ENDWALL
- PROPOSED SANITARY SEWER MANHOLE
- PROPOSED HYDRANT
- PROPOSED WATER VALVE

Revisions:	Job No. 17-00213	Designed JAC	Date 5/16/2018	GREMMER & ASSOCIATES, INC.	85 South Pioneer Road, Suite 200, Fond du Lac, WI 54935, (920) 924-8720, fax (920) 924-5725
	Date: 5/16/2018	Drawn AJS	Date 5/16/2018		
		Checked TLL	Date 5/16/2018		

DESIGN 2 CONSTRUCT
NORTHWEST BUSINESS PARK - PHASE 6
JACKSON, WI

PLAN DETAILS

FILE NAME: S:\CURRROD\SITEPLAN\DESIGN\CONSTRUCT\CTH P-ROSEWOOD SITE\C\VLSB2\NWBP6\SHEETS\PLAN\NWBP6_021202-PD.DWG
LAYOUT NAME: Sheet 02
PLOT DATE: 5/16/2018 9:25 AM PLOT BY: AARON SARAUER PLOT SCALE: 1 IN 20 FT

NOTES

ALL CURB RADII ARE TO FACE OF CURB.

ALL ROADWAY DIMENSIONS ARE TO FACE OF CURB OR JOINT LINE.

ALL DATA POINT STATION AND OFFSETS ARE TO THE FACE OF CURB OR FRONT OF WALK.

LEGEND

- (XX.XX) PROPOSED ELEVATIONS
- (XX.XX) EXISTING ELEVATIONS
- CONCRETE CURB & GUTTER TRANSITION
- DATA POINT
- PROPOSED CATCH BASIN INLET
- PROPOSED STORM SEWER MANHOLE
- PROPOSED ENDWALL
- PROPOSED SANITARY SEWER MANHOLE
- PROPOSED HYDRANT
- PROPOSED WATER VALVE

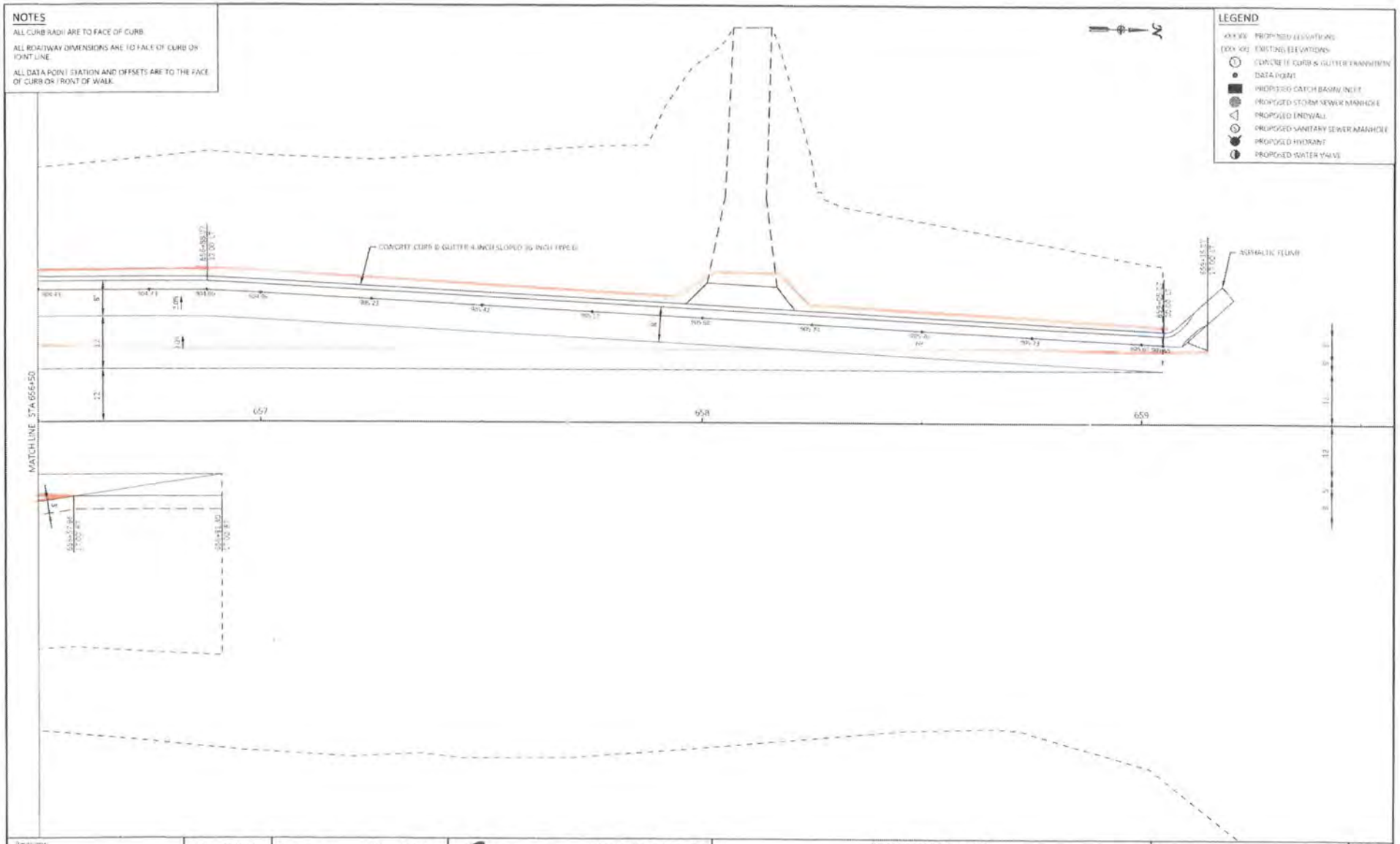

Revisions	Job No: 17-001/13	Designed: JAC Date: 5/16/2018	GREIMMER & ASSOCIATES, INC.	85 South Pioneer Road, Suite 500 Fond du Lac, WI 54935 (800) 824-8720 fax (920) 824-5725	DESIGN 2 CONSTRUCT NORTHWEST BUSINESS PARK - PHASE 6 JACKSON, WI	PLAN DETAILS	SHEET 15 / 83
	Date: 5/16/2018	Drawn: AJS Date: 5/16/2018					
		Checked: TLL Date: 5/16/2018					

FILE NAME: S:\CURRPROJ\SITEPLAN\DESIGN\CONSTRUCT\CTH P ADSFWOOD DTI\CIVL3D\NWBPS\SHEETS\PLAN\NWBPS_021202-P0.DWG
LAYOUT NAME: Sheet-03

PLOT DATE: 5/16/2018 9:29 AM PLOT BY: AARON SARAUER PLOT SCALE: 1 IN 20 FT

WASHINGTON COUNTY HIGHWAY DEPARTMENT
PROJECT NAME: CTH P (STH 60 to Woodland Rd)
PROJECT ID : HWY 18-07

				Rosewood TIFF Breakdown	
		ONTRACT QUANTITIE		WORK PERFORMED THIS PERIOD	
ITEM NO.	DESCRIPTION OF ITEM	UNIT	UNIT PRICE	QUANTITY THIS PERIOD	AMOUNT THIS PERIOD
201.0105	Clearing	STA	$528.00	0.00	$0.00
201.0205	Grubbing	STA	$264.00	0.00	$0.00
203.0100	Removing Small Pipe Culverts	EACH	$150.00	1.00	$150.00
203.0200.01	Removing Old Structure Station 662+28	LS	$4,800.00	0.00	$0.00
203.0200.02	Removing Old Structure Station 684+48	LS	$1,000.00	0.00	$0.00
204.0100	Removing Pavement	SY	$1.78	0.00	$0.00
204.0150	Removing Curb & Gutter	LF	$3.41	0.00	$0.00
204.0155	Removing Concrete Sidewalk	SY	$35.50	0.00	$0.00
204.0165	Removing Guardrail	LF	$2.00	0.00	$0.00
204.0220	Removing Inlets	EACH	$350.00	0.00	$0.00
204.0245.01	Removing Storm Sewer 12-Inch	LF	$25.00	0.00	$0.00
204.0245.02	Removing Storm Sewer 18-Inch	LF	$15.00	0.00	$0.00
204.0245.03	Removing Storm Sewer 24-Inch	LF	$17.00	0.00	$0.00
204.0245.04	Removing Storm Sewer 30-Inch	LF	$30.00	0.00	$0.00
204.0245.05	Removing Storm Sewer 36-Inch	LF	$35.00	0.00	$0.00
204.9105.S.01	Removing Loop Detector Wire & Lead-In Cable	LS	$50.00	0.00	$0.00
205.0100	Excavation Common (29,854 CY Pay Plan Quantity and 5,865 CY EBS)	CY	$7.93	574.00	$4,551.82
205.0400	Excavation Marsh	CY	$8.46	0.00	$0.00
305.0110	Base Aggregate Dense 3/4-Inch	TON	$16.85	0.00	$0.00
305.0120	Base Aggregate Dense 1 1/4-Inch	TON	$7.47	220.00	$1,643.40
305.0130	Base Aggregate Dense 3-Inch	TON	$9.19	373.00	$3,427.87
311.0110	Breaker Run	TON	$12.81	548.00	$7,019.88
416.0160	Concrete Driveway 6-Inch	SY	$47.25	0.00	$0.00
416.0610	Drilled Tie Bars	EACH	$14.00	0.00	$0.00
455.0605	Tack Coat	GAL	$1.90	58.00	$110.20
460.6223	HMA Pavement 3 MT 58-28 S	TON	$48.50	200.00	$9,700.00
460.6224	HMA Pavement 4 MT 58-28 S	TON	$50.50	96.00	$4,848.00
465.0105	Asphaltic Surface	TON	$95.00	0.00	$0.00
465.0120	Asphaltic Surface Driveways and Field Entrances	TON	$60.00	0.00	$0.00
465.0315	Asphaltic Flumes	SY	$95.00	8.00	$760.00
520.8000	Concrete Collars for Pipe	EACH	$400.00	0.00	$0.00

WASHINGTON COUNTY HIGHWAY DEPARTMENT
PROJECT NAME: CTH P (STH 60 to Woodland Rd)
PROJECT ID : HWY 18-07

521.1018	Apron Endwalls for Culvert Pipe Steel 18-Inch	EACH	$175.00	2.00	$350.00
521.1036	Apron Endwalls for Culvert Pipe Steel 36-Inch	EACH	$560.00	0.00	$0.00
521.1518	Apron Endwalls for Culvert Pipe Sloped Side Drains Steel 18- Inch 6 to 1	EACH	$520.00	0.00	$0.00
521.1735	Apron Endwalls for Pipe Arch Sloped Side Drains Steel 35x24- Inch 6 to 1	EACH	$1,300.00	0.00	$0.00
521.3118	Culvert Pipe Corrugated Steel 18-Inch	LF	$45.00	112.00	$5,040.00
521.3136	Culvert Pipe Corrugated Steel 36-Inch	LF	$79.00	0.00	$0.00
521.3735	Pipe Arch Corrugated Steel 35x24-Inch	LF	$68.00	0.00	$0.00
522.1018	Apron Endwalls for Culvert Pipe Reinforced Concrete 18-Inch	EACH	$550.00	0.00	$0.00
522.1024	Apron Endwalls for Culvert Pipe Reinforced Concrete 24-Inch	EACH	$700.00	0.00	$0.00
522.2414	Culvert Pipe Reinforced Concrete Horizontal Elliptical Class HE-IV 14x23-Inch	LF	$89.50	0.00	$0.00
522.2614	Apron Endwalls for Culvert Pipe Reinforced Concrete Horizont al Elliptical 14x23-Inch	EACH	$690.00	0.00	$0.00
601.0411	Concrete Curb & Gutter 30-Inch Type D	LF	$22.00	0.00	$0.00
601.0553	Concrete Curb & Gutter 4-Inch Sloped 36-Inch Type D	LF	$17.00	143.00	$2,431.00
602.0405	Concrete Sidewalk 4-Inch	SF	$8.00	90.00	$720.00
602.0415	Concrete Sidewalk 6-Inch	SF	$5.25	0.00	$0.00
602.0505	Curb Ramp Detectable Warning Field Yellow	SF	$32.00	0.00	$0.00
606.0200	Riprap Medium	CY	$84.22	0.00	$0.00
608.0312	Storm Sewer Pipe Reinforced Concrete Class III 12-Inch	LF	$60.00	0.00	$0.00
608.0336	Storm Sewer Pipe Reinforced Concrete Class III 36-Inch	LF	$130.00	0.00	$0.00
608.0415	Storm Sewer Pipe Reinforced Concrete Class IV 15-Inch	LF	$58.50	0.00	$0.00
608.0418	Storm Sewer Pipe Reinforced Concrete Class IV 18-Inch	LF	$64.00	0.00	$0.00
608.0424	Storm Sewer Pipe Reinforced Concrete Class IV 24-Inch	LF	$80.00	0.00	$0.00
611.0430	Reconstructing Inlets	EACH	$850.00	0.00	$0.00
611.0615	Inlet Covers Type F	EACH	$1,100.00	0.00	$0.00
611.0642	Inlet Covers Type MS	EACH	$425.00	0.00	$0.00
611.0645	Inlet Covers Type MS-A	EACH	$450.00	0.00	$0.00
611.1230	Catch Basins 2x3-FT	EACH	$980.00	0.00	$0.00
611.3230	Inlets 2x3-FT	EACH	$950.00	0.00	$0.00
611.3901	Inlets Median 1 Grate	EACH	$1,350.00	0.00	$0.00
611.3903	Inlets Median 3 Grate	EACH	$5,200.00	0.00	$0.00
611.9710	Salvaged Inlet Covers	EACH	$250.00	0.00	$0.00
619.1000	Mobilization	EACH	$67,887.00	0.00	$0.00
625.0500	Salvaged Topsoil	SY	$1.50	0.00	$0.00
627.0200	Mulching	SY	$0.15	200.00	$30.00

WASHINGTON COUNTY HIGHWAY DEPARTMENT
PROJECT NAME: CTH P (STH 60 to Woodland Rd)
PROJECT ID : HWY 18-07

628.1504	Silt Fence	LF	$2.00	0.00	$0.00
628.2004	Erosion Mat Class I Type B	SY	$0.95	200.00	$190.00
628.2008	Erosion Mat Urban Class I Type B	SY	$1.55	0.00	$0.00
628.7005	Inlet Protection Type A	EACH	$100.00	0.00	$0.00
628.7010	Inlet Protection Type B	EACH	$45.00	0.00	$0.00
628.7015	Inlet Protection Type C	EACH	$50.00	0.00	$0.00
628.7555	Culvert Pipe Checks	EACH	$10.00	3.00	$30.00
628.7570	Rock Bags	EACH	$5.00	0.00	$0.00
629.0210	Fertilizer Type B	CWT	$50.00	2.00	$100.00
630.0120	Seeding Mixture No. 20	LB	$4.95	20.00	$99.00
630.0140	Seeding Mixture No. 40	LB	$4.95	0.00	$0.00
630.0200	Seeding Temporary	LB	$2.00	0.00	$0.00
633.5200	Markers Culvert End	EACH	$50.00	2.00	$100.00
634.0614	Posts Wood 4x6-Inch X 14-FT	EACH	$55.00	1.00	$55.00
634.0616	Posts Wood 4x6-Inch X 16-FT	EACH	$57.00	1.00	$57.00
634.0618	Posts Wood 4x6-Inch X 18-FT	EACH	$60.00	0.00	$0.00
637.2210	Signs Type II Reflective H	SF	$17.00	11.43	$194.31
637.2230	Signs Type II Reflective F	SF	$18.00	0.00	$0.00
638.2102	Moving Signs Type II	EACH	$75.00	0.00	$0.00
638.2602	Removing Signs Type II	EACH	$25.00	2.00	$50.00
638.3000	Removing Small Sign Supports	EACH	$25.00	2.00	$50.00
642.5001	Field Office Type B	EACH	$12,025.00	0.00	$0.00
643.5000	Traffic Control	EACH	$26,700.00	0.00	$0.00
645.0120	Geotextile Type HR	SY	$5.12	0.00	$0.00
645.0140	Geotextile Type SAS	SY	$1.04	0.00	$0.00
646.1020	Marking Line Epoxy 4-Inch	LF	$0.24	0.00	$0.00
646.3020	Marking Line Epoxy 8-Inch	LF	$1.00	0.00	$0.00
646.5020	Marking Arrow Epoxy	EACH	$140.00	0.00	$0.00
646.5120	Marking Word Epoxy	EACH	$200.00	0.00	$0.00
646.6120	Marking Stop Line Epoxy 18-Inch	LF	$7.00	0.00	$0.00
646.7120	Marking Diagonal Epoxy 12-Inch	LF	$6.20	0.00	$0.00
646.7420	Marking Crosswalk Epoxy Transverse Line 6-Inch	LF	$5.10	0.00	$0.00
646.8120	Marking Curb Epoxy	LF	$10.00	0.00	$0.00
646.8220	Marking Island Nose Epoxy	EACH	$140.00	0.00	$0.00

WASHINGTON COUNTY HIGHWAY DEPARTMENT
PROJECT NAME: CTH P (STH 60 to Woodland Rd)
PROJECT ID : HWY 18-07

646.9000	Marking Removal Line 4-Inch	LF	$2.00	0.00	$0.00
646.9100	Marking Removal Line 8-Inch	LF	$2.00	0.00	$0.00
646.9200	Marking Removal Line Wide	LF	$2.00	0.00	$0.00
646.9300	Marking Removal Special Marking	EACH	$120.00	0.00	$0.00
648.0100	Locating No-Passing Zones	MI	$600.00	0.00	$0.00
650.4000	Construction Staking Storm Sewer	EACH	$68.00	0.00	$0.00
650.4500	Construction Staking Subgrade	LF	$0.01	0.00	$0.00
650.5000	Construction Staking Base	LF	$0.55	0.00	$0.00
650.5500	Construction Staking Curb Gutter and Curb & Gutter	LF	$1.50	143.00	$214.50
650.6000	Construction Staking Pipe Culverts	EACH	$70.00	1.00	$70.00
650.6500.01	Construction Staking Structure Layout Wall Modular Block Gravity LRFD	LS	$400.00	0.00	$0.00
650.9910.01	Construction Staking Supplemental Control HWY 18-07	LS	$1,200.00	0.00	$0.00
650.9920	Construction Staking Slope Stakes	LF	$0.73	0.00	$0.00
652.0225	Conduit Rigid Nonmetallic Schedule 40 2-Inch	LF	$6.00	0.00	$0.00
652.0800	Conduit Loop Detector	LF	$4.00	0.00	$0.00
653.0135	Pull Boxes Steel 24x36-Inch	EACH	$675.00	0.00	$0.00
653.0905	Removing Pull Boxes	EACH	$50.00	0.00	$0.00
655.0700	Loop Detector Lead In Cable	LF	$1.30	0.00	$0.00
655.0800	Loop Detector Wire	LF	$0.55	0.00	$0.00
690.0150	Sawing Asphalt	LF	$1.25	0.00	$0.00
690.0250	Sawing Concrete	LF	$1.95	0.00	$0.00
SPV.0105.01	Single 9' x 5' Precast Concrete Box Culvert	LS	$95,345.00	0.00	$0.00
SPV.0105.02	Temporary Mailbox Accommodations	LS	$4,675.83	0.00	$0.00
SPV.0165.01	Wall Modular Block LRFD	SF	$34.00	0.00	$0.00
				0.00	$0.00
				0.00	$0.00
				0.00	$0.00
				0.00	$0.00
		SUB TOTALS			$41,991.98

WASHINGTON COUNTY HIGHWAY DEPARTMENT
PROJECT NAME: CTH P (STH 60 to Woodland Rd)
PROJECT ID : HWY 18-07

Supplemental Items and Change Order Items

612.0404	**Pipe Underdrain Wrapped 4-Inch**	**LF**	$10.00	0.00	$0.00
645.0220	**Geogrid Type SR**	**SY**	$3.85	822.00	$3,164.70
				0.00	$0.00
				0.00	$0.00
				0.00	$0.00
				0.00	$0.00
				0.00	$0.00
				0.00	$0.00
				0.00	$0.00
				0.00	$0.00
				0.00	$0.00
				0.00	$0.00
				0.00	$0.00
				0.00	$0.00
		SUB TOTALS			$3,164.70

Rosewood TIFF Breakdown

	THIS PERIOD AMOUNT
Original Contract Items	$41,991.98
Change order Items	$3,164.70
Total	$45,156.68

Sylvester Circle Additional Costs

Owner: Washington County Highway Department
Project Name: CTH P Reconstruction
STH 60 to Canyon Drive
Project No.: HWY 18-07

Sylvester Circle Turn & Bypass Lanes

Item No.	Item	Quantity	Unit	Michels Corporation Unit Price	Michels Corporation Total
205.0100	Excavation Common	450.00	CY	$ 7.93	$ 3,568.50
305.0110	Base Aggregate Dense 3/4-Inch	(90.00)	TON	$ 16.85	$ (1,516.50)
305.0120	Base Aggregate Dense 1 1/4-Inch	225.00	TON	$ 7.47	$ 1,680.75
305.0130	Base Aggregate Dense 3-Inch	545.00	TON	$ 9.19	$ 5,008.55
416.0160	Concrete Driveway 6-Inch	12.00	SY	$ 47.25	$ 567.00
455.0605	Tack Coat	140.00	GAL	$ 1.90	$ 266.00
460.6223	HMA Pavement 3 MT 58-28 S	345.00	TON	$ 48.50	$ 16,732.50
460.6224	HMA Pavement 4 MT 58-28 S	135.00	TON	$ 50.50	$ 6,817.50
465.0315	Asphaltic Flumes	24.00	SY	$ 95.00	$ 2,280.00
521.1018	Apron Endwalls for Culvert Pipe Steel 18-Inch	2.00	EACH	$ 175.00	$ 350.00
521.3118	Culvert Pipe Corrugated Steel 18-Inch	138.00	LF	$ 45.00	$ 6,210.00
601.0553	Concrete Curb & Gutter 4-Inch Sloped 36-Inch Type D	580.00	LF	$ 17.00	$ 9,860.00
625.0500	Salvaged Topsoil	(310.00)	SY	$ 1.50	$ (465.00)
627.0200	Mulching	520.00	SY	$ 0.15	$ 78.00
628.2004	Erosion Mat Class I Type B	(830.00)	SY	$ 0.95	$ (788.50)
628.7555	Culvert Pipe Checks	3.00	EACH	$ 10.00	$ 30.00
628.7570	Rock Bags	(95.00)	EACH	$ 5.00	$ (475.00)
629.0210	Fertilizer Type B	(0.50)	CWT	$ 50.00	$ (25.00)
630.0120	Seeding Mixture No. 20	(26.00)	LB	$ 4.95	$ (128.70)
630.0140	Seeding Mixture No. 40	3.00	LB	$ 4.95	$ 14.85
630.0200	Seeding Temporary	(13.00)	LB	$ 2.00	$ (26.00)
633.5200	Markers Culvert End	2.00	EACH	$ 50.00	$ 100.00
634.0614	Posts Wood 4x6-Inch X 14-FT	1.00	EACH	$ 55.00	$ 55.00
637.2210	Signs Type II Reflective H	5.18	SF	$ 17.00	$ 88.06
646.1020	Marking Line Epoxy 4-Inch	(70.00)	LF	$ 0.24	$ (16.80)
646.3020	Marking Line Epoxy 8-Inch	150.00	LF	$ 1.00	$ 150.00
646.6120	Marking Stop Line Epoxy 18-Inch	30.00	LF	$ 7.00	$ 210.00
650.5500	Construction Staking Curb Gutter and Curb & Gutter	580.00	LF	$ 1.50	$ 870.00
650.6000	Construction Staking Pipe Culverts	1.00	EACH	$ 70.00	$ 70.00
			TOTAL		$ 51,565.21

SUBGRADE STABIL.

986 CY $7,818.48

311.0110 BREAKER RUN — TONS $12.81 — 1775 tons $22,737.75

645.0220 GEO GRID TYPE SR — SY $3.85 — 1378 SY $5,305.30

* TOTAL ADDL FOR SUBGRADE STABILIZATION $35,862.03

License Agreement to Farm Public Land

THIS LICENSE AGREEMENT TO FARM PUBLIC LAND is made this 15th day of Feb, 2021, between the VILLAGE OF JACKSON, a municipal corporation, of Washington County, Wisconsin ("VILLAGE"), and Robert Loduha, ("Licensee").

WITNESSETH:

The VILLAGE is the owner of a parcel of land located in the Village of Jackson, which is vacant public land located Sec. 20, T10N, R20E PT OF NE NW LOT 1 and LOT 2 DOC 1466506 + 1466507 EXC CSM 6969 and identified by Tax Keys: V3_053600B and V3_053600C. As the VILLAGE has no current plans to develop the property in 2021 and to limit weed growth during 2021, the VILLAGE will grant a license to Robert Loduha for the purpose of farming. In the event the VILLAGE chooses to change the use of these subject lands as commonly defined, a "Term of Convenience" of no less than 120 days shall be provided to the Licensee. Any financial loss for the removal of planted crops, due to termination of the agreement, shall be reimbursed to the Licensee by the VILLAGE.

NOW THEREFORE, IT IS AGREED between the VILLAGE and Licensee as follows:

1. Premises. VILLAGE, in consideration of the covenants contained herein, agree to issue a License Agreement to Robert Loduha for the space and area referred to below as the "demised premises" for a fee upon the terms set forth for the purposes of farming.

2. Demised Premises. The demised premise consists of vacant public land located in Sec. 20, T10N, R20E PT OF NE NW LOT 1 and LOT 2 DOC 1466506 + 1466507 EXC CSM 6969 and identified by Tax Keys: V3_053600B and V3_053600C which consists of 20 acres. This land is not currently maintained by the Village of Jackson. See EXHIBIT A for map details.

3. Term. The term of this license agreement is from December 1, 2020 to November 30, 2021.

4. Obligations of Licensee.

A. Type of Operation. The demised premises shall be occupied and used by Licensee for farming purposes only. The Village benefits by the continued maintenance of the property. These crops may be harvested and sold by the Licensee as he/she sees fit. The Village is not entitled to any proceeds from the sale of these crops.

B. Cleanliness, Trash, Etc. Licensee shall maintain the demised premises in a clean, neat and sanitary condition.

5. **License Fee.** The License Fee shall be 20 acres at $125.00 per acre for a total of $2,500 per year. The full License Fee shall be payable upon cropping of the land, or before November 30th, 2021.

6. **Insurance.**

A. Fire Insurance. Licensee shall procure and keep in force fire and extended coverage insurance upon its improvements, furniture, furnishings, fixtures and equipment to their full insurable value and shall furnish the VILLAGE'S Clerk with evidence that coverage has been procured and is being maintained in full force.

B. Liability Insurance. Licensee shall maintain with insurance underwriters satisfactory to the VILLAGE a standard form of policy or policies of insurance in such amounts as may from time to time be approved by VILLAGE protecting both Licensee and VILLAGE against public liability, products liability and property damage. Licensee shall promptly, after the execution of this License Agreement, furnish such policy or policies for property damage growing out of any one accident or other cause in the sum of not less than $1 million, for personal injury/death growing out of any one accident or other cause with liability of not less than $1 million, the coverage to include products liability. It is understood that the specified amounts of insurance in no way limits the liability of Licensee and that Licensee shall carry insurance in amounts so as to indemnify the VILLAGE from all claims, suits, demands and actions. Licensee shall furnish a certificate from the insurance carrier or carriers showing insurance to be in full force during the term of this contract or shall deposit copies of the policies that give this coverage with VILLAGE'S Deputy Clerk.

7. **Indemnity.** Licensee agrees to defend and indemnify the VILLAGE from all fines, suits, claims, demands and actions of any kind by reason of any of its operations under this license agreement and agrees to assume all the risk in the operation of its business and shall be solely responsible and answerable in damages for any accidents or injuries to persons or property.

8. **Signs.** Licensee shall not erect, install, operate or cause or permit to be erected, installed or operated in or upon the demised premises, any signs or other similar advertising device without having first obtained the approval of the VILLAGE.

9. **Land Condition at End of License.** Licensee shall disc/till the land after crops have been removed and return the land to its original condition, unless otherwise approved by the Village Board, by no later than December 31, 2021.

10. **Nonassignment or Subletting.** Licensee shall not assign this agreement and its rights, in whole or in part, except with the prior written consent of the VILLAGE.

11. Default. In the event that Licensee shall fail to pay the agreed upon License Fee the VILLAGE shall have the right to terminate this License Agreement. In the event Licensee fails to keep and perform or shall violate the terms, covenants and conditions of this license agreement on its part to be kept and performed and Licensee shall not have cured or corrected this failure or violation within ten (10) days after written notice shall have been given to Licensee, the VILLAGE shall have the right to terminate this license agreement.

Upon the occurrence one or more of the events of default, Licensee's right to possession of the demised premises shall terminate, and Licensee shall surrender possession of the demised premises immediately. In this event, Licensee grants to the VILLAGE full and free license to enter into and upon the premises or any part of them to take possession with or without process of law and to expel and remove the Licensee.

12. Not Joint Venture. It is mutually understood and agreed that nothing contained in this License Agreement is intended, or shall be construed as, in any way creating or establishing the relationship of co-partners or joint venturers between the parties or as constituting the Licensee as the agent or representative of VILLAGE for any purpose or in any manner.

13. Rules and Regulations. Licensee shall observe all of the VILLAGE'S and Washington County ordinances as well as the State of Wisconsin Statutes regarding activity on the farmed property.

14. Termination Without Cause. If this License Agreement is determined to be invalid or beyond the authority of the VILLAGE or if the Village Board without cause acts to terminate this License Agreement, Licensee shall cease using the demised premises as an extension of its operation and shall abandon the same within 10 days after written notification of the termination. In the event of early termination by the Village Board, a pro-rata share of the payment received by the VILLAGE shall be returned to Lessee.

15. Entire Agreement/Amendment. The License Agreement contains the entire agreement of the parties and there are no other promises or conditions in any other agreement whether oral or written. This License Agreement may be modified or amended in writing, if the writing is signed by both parties and approved by the Village Board with a favorable recommendation from the Board of Public Works.

16. Severability. If any portion of this License Agreement shall be held to be invalid or unenforceable for any reason, the remaining provisions shall continue to be valid and enforceable. If a Court finds that any provision of the License Agreement is invalid or enforceable, then such provision shall be deemed to be written, construed, and enforced as so limited.

17. Governing Law. The License shall be construed in accordance with the laws in the State of Wisconsin.

IN WITNESS WHEREOF, the parties hereto have executed this license agreement on the day and year first above written.

License Issuer:

VILLAGE OF JACKSON

By:_____
Mike Schwab, Village President

Attest:_____
Jilline Dobratz, Village Clerk

Licensee:

Robert Loduha

By: Robert Loduha
Robert Loduha

EXHIBIT A

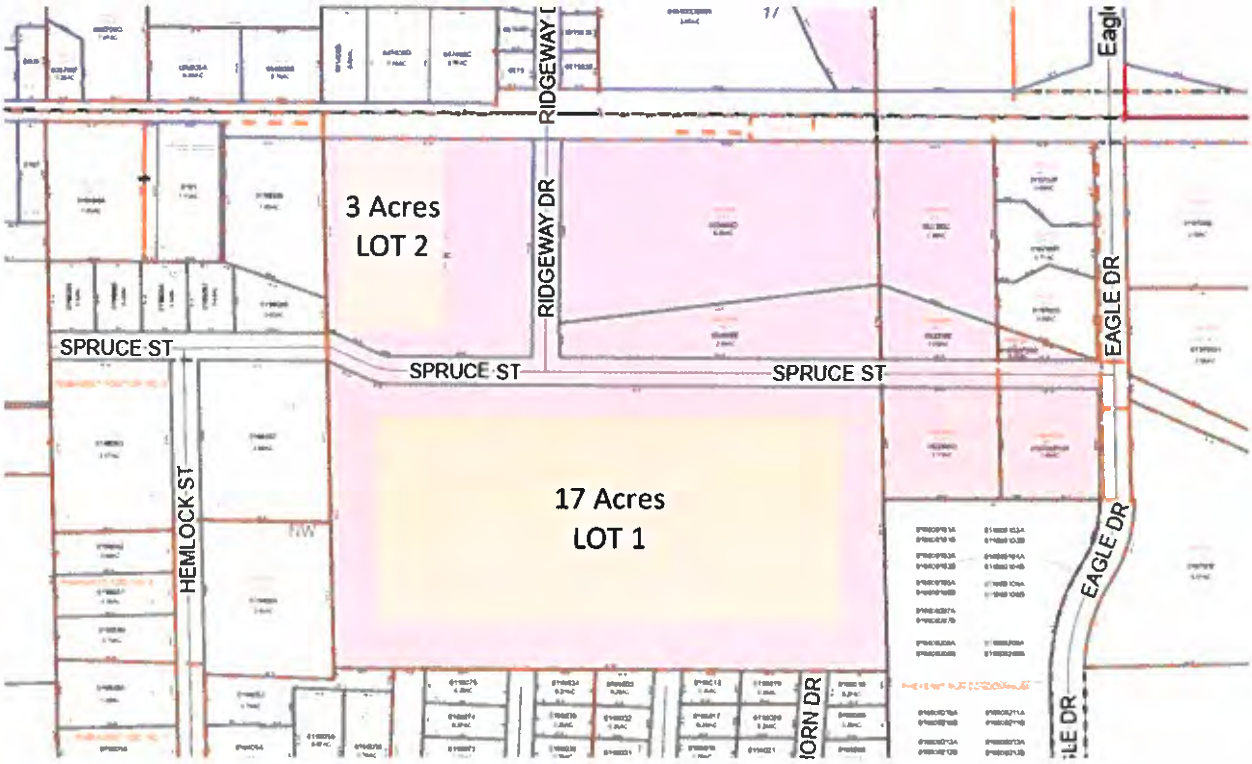
3 Acres
LOT 2
17 Acres
LOT 1
RIDGEWAY DR
SPRUCE ST
SPRUCE ST
SPRUCE ST
HEMLOCK ST
EAGLE DR
EAGLE DR

This form is available electronically. *(See final page for Privacy Act and Paperwork Reduction Act Statements)*

CCC-866
(07-23-19)

U.S. DEPARTMENT OF AGRICULTURE
Commodity Credit Corporation

AGRICULTURAL RISK COVERAGE - COUNTY OPTION (ARC-CO) AND PRICE LOSS COVERAGE (PLC) ELECTION AND CONTRACT

1. Program Year: **2021**

2. State Code	3. County Code	4. Farm Number
55	131	6689

5A. County FSA Office Name and Address

WASHINGTON COUNTY FARM SERVICE AGENCY
333 E WASHINGTON ST SUITE 3300
WEST BEND, WI 53095-2509

5B. County Office Telephone No *(Including Area Code)*	5C. County Office Fax No *(Including Area Code)*
(262)335-4860	(855)813-6655

THIS ARC-CO AND PLC ELECTION AND CONTRACT is entered into between the Commodity Credit Corporation (CCC) and the undersigned producers on the farm identified in Item 4. Upon approval, this farm and the producers on the farm are enrolled in ARC-CO and/or PLC for the program year identified above in Item 1. All producers with a share in base acres must sign this contract by the announced enrollment deadline of the applicable program year in order to participate and make themselves potentially eligible to receive payments for the applicable program year.

The terms and conditions of the ARC-CO and PLC contract are contained in the CCC-862 and CCC-866 Appendix and the regulations at 7 CFR Part 1412. By signing this contract producers: (1) acknowledge receipt and agree to abide by the terms of the CCC-862 and CCC-866 Appendix; (2) agree to comply with the terms and conditions of the program and those governing payment limitation and eligibility and adjusted gross income limitation provisions; (3) agree that the terms and benefits of this program are subject to changes in law; and (4) certify that all the information contained on this form, whether or not personally entered by the producer, is true, correct, and accurate. All producers agree to participating or not participating on a covered commodity by covered commodity basis in Item 11.

All producers on the farm must agree to the election made in Item 8. If an ARC or PLC election is not made the election defaults to the election for the farm that was effective under the previous Farm Bill, and no payments will be earned under this contract and farm for 2019. All producers on the farm agree and acknowledge that: (1) this election is irrevocable for the covered commodities and the farm, or any resulting farm(s) of a reconstitution; (Beginning in 2021, owners may change the election on the farm); (2) this farm may not be combined with any other farm that has base acres and does not have the same program election applicable for each and all covered commodities on all farms intended to be combined; (3) even though the producers on the farm may have made an election, producers must still annually enroll the farm and covered commodity in the ARC or PLC program in order to be eligible to receive ARC or PLC benefits for that covered commodity and crop year; (4) they must comply with the regulations at 7 CFR Part 1412; and (5) ARC or PLC benefits are subject to change based upon changes to law. FSA's acceptance of this signed form and use of the form does not equate to FSA's approval of the election. If FSA later determines this election was invalid under 7 CFR Part 1412, the elections indicated on this form are invalid and will not apply to the farm.

NOTE: PLC yields in item 10 are only used in the payment calculation of covered commodities that have elected PLC.

6. Multi-year Contract *(2019 - 2023)* ☐

7. Commodity	8. Program Elected	9. Base Acres	10. PLC Yield	11. Participating YES	11. Participating NO	7. Commodity	8. Program Elected	9. Base Acres	10. PLC Yield	11. Participating YES	11. Participating NO
CORN	PLC	18.2	154	☒	☐	WHEAT	PLC	12.7	46	☒	☐
				☐	☐					☐	☐
				☐	☐					☐	☐

12A. Owner or Producer's Name and Address
ROBERT J LODUHA
2135 HIGHLAND RD
JACKSON, WI 53037-9749

13. Commodity	14. Payment Share	13. Commodity	14. Payment Share
CORN	54.09%	WHEAT	54.09%

12B. Email Address

12C. Telephone No. *(Including Area Code)*: **(262) 677-2687**

15A. Refused Payment Information:

☐ All ARC-CO Payments are Refused ☐ All PLC Payments are Refused

15B. Producer's Initials

15C. Date Initialed *(MM-DD-YYYY)*

16A. Producer's Signature (By) Robert J Loduha

16B. Title/Relationship of the Individual Signing in the Representative Capacity

16C. Date (MM-DD-YYYY) 1/20/21

FOR FSA USE ONLY

17A. Signature of CCC Representative

17B. Date *(MM-DD-YYYY)*

18. Remarks

19. Employee's Initials

Cedar corporation

engineering | architecture | environmental | surveying
landscape architecture | planning | economic development

W61 N497 Washington Avenue
Cedarburg, WI 53012
262-204-2360
800-472-7372
FAX 262-375-2688
www.cedarcorp.com

February 2, 2021

Village of Jackson
N168 W20733 Main Street
PO Box 637
Jackson, WI 53037

Attn: Mr. Brian Kober, P.E., Director of Public Works

Re: Contractor's Application for Payment No. 4
2020 Road and Utility Project
Project No. 05789-0011

Dear Mr. Kober:

Enclosed for your use in payment to Wondra Construction, Inc. in the amount of $19,939.87 is Contractor's Application for Payment No. 4.

Following your review and approval, please complete the application for payment forms within the areas reserved for the Owner. Thereafter, retain one copy for your records, provide the second copy to the Contractor with payment, and provide the third copy to our office.

Should you have any questions, please feel free to contact me at our Cedarburg office.

Sincerely,

CEDAR CORPORATION

Douglas T. Kroes
Senior Construction Manager

Enclosed: Contractor's Application for Payment No. 4
Lien Waivers

Cc: Roger Thimm, Wondra Construction, Inc.

EJCDC
ENGINEERS JOINT CONTRACT DOCUMENTS COMMITTEE

☒ Owner ☐ Engineer ☐ Contractor ☐ Funding Agency

Contractor's Application for Payment No. 4

	Application Period: 12-01-2020 to 01-28-2021	Application Date: 1/28/2021
To (Owner): Village of Jackson	From (Contractor): Wondra Construction, Inc.	Via (Engineer): Cedar Corporation
Project: 2020 Road and Utility Project	Contract: Roger Thimm	
Owner's Contract No: C-20	Contractor's Project No:	Engineer's Project No: 05789-0011

Application For Payment
Change Order Summary

Approved Change Orders

Number	Additions	Deductions
1	$17,610.00	
TOTALS	$17,610.00	
NET CHANGE BY CHANGE ORDERS	**$17,610.00**	

1. ORIGINAL CONTRACT PRICE	$	**$458,548.12**
2. Net change by Change Orders	$	**$17,610.00**
3. Current Contract Price (Line 1 ± 2)	$	**$476,158.12**
4. TOTAL COMPLETED AND STORED TO DATE (Column I total on Progress Estimates)	$	**$468,731.15**
5. RETAINAGE:		
a. 5% X $468,731.15 Work Completed	$	**$23,436.56**
b. 5% X _____ Stored Material	$	
c. Total Retainage (Line 5.a + Line 5.b)	$	**$23,436.56**
6. AMOUNT ELIGIBLE TO DATE (Line 4 - Line 5.c)	$	**$445,294.59**
7. LESS PREVIOUS PAYMENTS (Line 6 from prior Application)	$	**$425,354.72**
8. AMOUNT DUE THIS APPLICATION	$	**$19,939.87**

Contractor's Certification

The undersigned Contractor certifies, to the best of its knowledge, the following:
(1) All previous progress payments received from Owner on account of Work done under the Contract have been applied on account to discharge Contractor's legitimate obligations incurred in connection with the Work covered by prior Applications for Payment;
(2) Title to all Work, materials and equipment incorporated in said Work, or otherwise listed in or covered by this Application for Payment, will pass to Owner at time of payment free and clear of all Liens, security interests, and encumbrances (except such as are covered by a bond acceptable to Owner indemnifying Owner against any such Liens, security interest, or encumbrances); and
(3) All the Work covered by this Application for Payment is in accordance with the Contract Documents and is not defective.

Contractor Signature

By: Roger W Thimm Date: 1-29-2021

Payment of: $ $19,939.87
(Line 8 or other - attach explanation of the other amount)

is recommended by: _____ (Engineer) 2/2/21 (Date)

Payment of: $ $19,939.87
(Line 8 or other - attach explanation of the other amount)

is approved by: _____ (Owner) _____ (Date)

Approved by: _____ Funding or Financing Entity (if applicable) _____ (Date)

Unit Price Progress Estimate

Contractor's Application

Project: 2020 Road and Utility Project

Application Period: 12-01-2020 to 01-28-2021

Application Number: 4

Application Date: January 28, 2021

A				B	C	D	E	F	G	H	I	J
Item		Estimated Bid Quantity	Unit Price	Quantity Completed						Total Completed & Stored to Date (C+E+G)		% Comp.
				Previous Applications		This Application		Materials Stored				
Bid No.	Description			Quantity	Amount	Quantity	Amount	Quantity	Amount	Quantity	Amount	
1	Common Excavation, Including Asphalt Pavement Removal	2,600 CY	$10.75	2600	$27,950.00					2600	$27,950.00	100.0%
2	Saw Cutting Asphalt Roadway	263 LF	$2.50	263	$657.50					263	$657.50	100.0%
3	Sanitary Manhole Chimney & Casting Replacement	3 Each	$880.00	3	$2,640.00					3	$2,640.00	100.0%
4	Valve Box Replacement	4 Each	$600.00	4	$2,400.00					4	$2,400.00	100.0%
5	6" Sanitary Lateral	10 LF	$67.00	64	$4,288.00					64	$4,288.00	640.0%
6	48" Storm Manhole	1 Each	$2,000.00	1	$2,000.00					1	$2,000.00	100.0%
7	36" RCP Storm Sewer with Pavement Replacement	185 LF	$105.65	187	$19,756.55					187	$19,756.55	101.1%
8	60" Dia Storm Sewer Inlet Manhole Replacement	1 Each	$3,360.00	1	$3,360.00					1	$3,360.00	100.0%
9	96" Dia Storm Sewer Inlet Manhole Replacement	1 Each	$7,110.00	1	$7,110.00					1	$7,110.00	100.0%
10	36" Flared End Section	1 Each	$1,300.00	1	$1,300.00					1	$1,300.00	100.0%
11	12" Dia RCP Storm Sewer	69 LF	$44.60	65	$2,899.00					65	$2,899.00	94.2%
12	4" Dia Storm Lateral (22 Units)	1,515 LF	$31.35	1412.65	$44,286.58	25	$783.75			1437.65	$45,070.33	94.9%
13	Medium Rip Rap	7 CY	$86.15	7	$603.05					7	$603.05	100.0%
14	Remove Concrete Sidewalk	10,393 SF	$0.26	10000	$2,600.00	393	$102.18			10393	$2,702.18	100.0%
15	4" Concrete Sidewalk	11,262 SF	$5.00	11000	$55,000.00	902.77	$4,513.85			11902.77	$59,513.85	105.7%
16	Remove Curb & Gutter	2,785 LF	$1.12	2700	$3,024.00	108	$120.96			2808	$3,144.96	100.8%
17	30" Curb & Gutter	2,785 LF	$16.60	2850	$47,310.00	-41.32	-$685.91			2808.68	$46,624.09	100.9%
18	Remove Concrete Driveway Apron	5,136 SF	$0.37	5136	$1,900.32	1459.77	$540.11			6595.77	$2,440.43	128.4%
19	7" Concrete Driveway Apron & Sidewalk	7,234 SF	$6.50	7000	$45,500.00	2066.27	$13,430.76			9066.27	$58,930.76	125.3%
20	Excavation Below Subgrade (EBS)	450 CY	$17.10	139.79	$2,390.41					139.79	$2,390.41	31.1%
21	EBS Backfill 1-1/4" Dense	450 Ton	$13.60	84.5	$1,149.20					84.5	$1,149.20	18.8%
22	EBS Backfill 3" Dense	450 Ton	$13.50									
23	1-1/4" Dense Crushed Aggregate Base Course	2,920 Ton	$13.10	2674.11	$35,030.84	166.69	$2,183.64			2840.8	$37,214.48	97.3%
24	Lower Layer HMA Pavement 3-1/4"	950 Ton	$67.56	826.93	$55,867.39					826.93	$55,867.39	87.0%
25	Upper Layer HMA Pavement 1-3/4"	520 Ton	$72.75	524.22	$38,137.01					524.22	$38,137.01	100.8%
26	Traffic Control	1 LS	$7,255.00	1	$7,255.00					1	$7,255.00	100.0%
27	Lawn Restoration	2,391 SY	$5.67	2391	$13,556.97					2391	$13,556.97	100.0%
28	Ditch Check	1 Each	$300.00									
29	Inlet Protection	14 Each	$85.00	17	$1,445.00					17	$1,445.00	121.4%
30	Storm Lateral Connections	1 LS	$12,000.00	1	$12,000.00					1	$12,000.00	100.0%
31	1 1/4 HDPE Water Service	1 LS	$1,100.00	1	$1,100.00					1	$1,100.00	100.0%
32	Replace Curb Valve Box	4 Each	$715.00	5	$3,575.00					5	$3,575.00	125.0%
33	Rebuild Chimneys on CB	11 Each	$150.00	11	$1,650.00					11	$1,650.00	100.0%
	TOTAL				$447,741.81		$20,989.34				$468,731.15	

WAIVER OF LIEN

Date December 22, 2020

For value received, We hereby waive All rights and claims for lien on building about to be erected, being erected, erected, altered or repaired and to the appurtenances thereunto belonging,

for, Jackson Hunters Road Reconstruction (Owner)

by, BMCI Construction Inc (Contractor)

same being situated in Washington County, State of Wisconsin, described as:

Curb and gutter

for all labor performed and for all material furnished for the erection, construction, alteration or repair of said building and appurtenances, to $99,558.03.

Mack Foyle

BMCI Construction

WAIVER OF LIEN

Date December 22, 2020

For value received, We hereby waive All rights and claims for lien on building about to be erected, being erected, erected, altered or repaired and to the appurtenances thereunto belonging,

for, Jackson Hunters Rd Reconstruction (Owner)

by, Ferguson (Contractor)

same being situated in Washington County, State of Wisconsin, described as:

Pipe & Fittings

for all labor performed and for all material furnished for the erection, construction, alteration or repair of said building and appurtenances, to $16,995.03.

Nikki Heiting - MCM

Nikki Heiting - Market Credit Manager

WAIVER OF LIEN

Date December 22, 2020

For value received, We hereby waive All rights and claims for lien on building about to be erected, being erected, erected, altered or repaired and to the appurtenances thereunto belonging,

for, Jackson Hunters Road Reconstruction (Owner)

by, Gordon Work Zones (Contractor)

same being situated in Washington County, State of Wisconsin, described as:

Traffic Control

for all labor performed and for all material furnished for the erection, construction, alteration or repair of said building and appurtenances, to $3,450.00.

Corey Gordon 12/29/2020

COREY GORDON

WAIVER OF LIEN

Date December 22, 2020

For value received, We hereby waive All rights and claims for lien on building about to be erected, being erected, erected, altered or repaired and to the appurtenances thereunto belonging,

for, Jackson Hunters Road Reconstruction (Owner)

by, Hawk Daylighting LLC (Contractor)

same being situated in Washington County, State of Wisconsin, described as:

Hydro Excavationl

for all labor performed and for all material furnished for the erection, construction, alteration or repair of said building and appurtenances, to $1,290.00.

Thomas Zywicki

Hawk Daylighting LLC 12-23-2020

WAIVER OF LIEN

Date December 22, 2020

For value received, We hereby waive All rights and claims for lien on building about to be erected, being erected, erected, altered or repaired and to the appurtenances thereunto belonging,

for, Jackson Hunters Road Reconstruction (Owner)

by, Interstate Sawing Co Inc (Contractor)

same being situated in Washington County, State of Wisconsin, described as:

Pavement sawing

for all labor performed and for all material furnished for the erection, construction, alteration or repair of said building and appurtenances, to $2,037.35.

Dawn M Reichert

WAIVER OF LIEN

Date December 22, 2020

For value received, We hereby waive All rights and claims for lien on building about to be erected, being erected, erected, altered or repaired and to the appurtenances thereunto belonging,

for, Jackson Hunters Road Reconstruction (Owner)

by, Langenecker Construction (Contractor)

same being situated in Washington County, State of Wisconsin, described as:

Trucking

for all labor performed and for all material furnished for the erection, construction, alteration or repair of said building and appurtenances, to $7,584.38.

Owner

Eric Langenecker

Langenecker Const

Scanned with CamScanner

WAIVER OF LIEN

Date December 22, 2020

For value received, We hereby waive All rights and claims for lien on building about to be erected, being erected, erected, altered or repaired and to the appurtenances thereunto belonging,

for, Jackson Hunters Rd Reconstruction (Owner)

by, Mayville Limestone Inc (Contractor)

same being situated in Washington County, State of Wisconsin, described as:

Aggregate

for all labor performed and for all material furnished for the erection, construction, alteration or repair of said building and appurtenances, to $34,686.16.

Brenda Schultz

Secretary

Cedar corporation

engineering | architecture | environmental | surveying
landscape architecture | planning | economic development

W61 N497 Washington Avenue
Cedarburg, WI 53012
262-204-2360
800-472-7372
FAX 262-375-2688
www.cedarcorp.com

February 2, 2021

Village of Jackson
N168 W20733 Main Street
PO Box 637
Jackson, WI 53037

Attn: Mr. Brian Kober, P.E., Director of Public Works

Re: Contractor's Application for Payment No. 6
Spruce Street and Ridgeway Drive Extensions
Project No. 05789-0008

Dear Mr. Kober:

Enclosed for your use in payment to Wondra Construction, Inc. in the amount of $20,484.68 is Contractor's Application for Payment No. 6.

Following your review and approval, please complete the application for payment forms within the areas reserved for the Owner. Thereafter, retain one copy for your records, provide the second copy to the Contractor with payment, and provide the third copy to our office.

Should you have any questions, please feel free to contact me at our Cedarburg office.

Sincerely,

CEDAR CORPORATION

Douglas T. Kroes
Senior Construction Manager

Enclosed: Contractor's Application for Payment No. 6
Lien Waivers

Cc: Roger Thimm, Wondra Construction, Inc.

EJCDC
ENGINEERS JOINT CONTRACT DOCUMENTS COMMITTEE

☒ Owner ☐ Engineer ☐ Contractor ☐ Funding Agency

Contractor's Application for Payment No. 6

Application Period: 12-01-2020 to 01-28-2021	Application Date: 1/28/2021	
To (Owner): Village of Jackson	From (Contractor): Wondra Construction, Inc.	Via (Engineer): Cedar Corporation
Project: Spruce Street and Ridgeway Drive Extensions	Contract: Roger Thimm	
Owner's Contract No: A-20	Contractor's Project No:	Engineer's Project No: 05789-0008

Application For Payment
Change Order Summary

Approved Change Orders		
Number	Additions	Deductions
1		$785.00
2	$17,584.00	
3		$51,765.50
TOTALS	$17,584.00	$52,550.50
NET CHANGE BY CHANGE ORDERS	-$34,966.50	

1. ORIGINAL CONTRACT PRICE	$	$1,423,655.55
2. Net change by Change Orders	$	-$34,966.50
3. Current Contract Price (Line 1 ± 2)	$	$1,388,689.05
4. TOTAL COMPLETED AND STORED TO DATE (Column I total on Progress Estimates)	$	$1,268,231.46
5. RETAINAGE:		
a. 5% X $1,268,231.46 Work Completed	$	$63,411.57
b. 5% X Stored Material	$	
c. Total Retainage (Line 5.a + Line 5.b)	$	$63,411.57
6. AMOUNT ELIGIBLE TO DATE (Line 4 - Line 5.c)	$	$1,204,819.88
7. LESS PREVIOUS PAYMENTS (Line 6 from prior Application)	$	$1,184,335.20
8. AMOUNT DUE THIS APPLICATION	$	$20,484.68

Contractor's Certification

The undersigned Contractor certifies, to the best of its knowledge, the following:
(1) All previous progress payments received from Owner on account of Work done under the Contract have been applied on account to discharge Contractor's legitimate obligations incurred in connection with the Work covered by prior Applications for Payment;
(2) Title to all Work, materials and equipment incorporated in said Work, or otherwise listed in or covered by this Application for Payment, will pass to Owner at time of payment free and clear of all Liens, security interests, and encumbrances (except such as are covered by a bond acceptable to Owner indemnifying Owner against any such Liens, security interest, or encumbrances); and
(3) All the Work covered by this Application for Payment is in accordance with the Contract Documents and is not defective.

Contractor Signature

By: Roger W Thimm Date: 1-29-2021

Payment of: $ $20,484.68
(Line 8 or other - attach explanation of the other amount)

is recommended by: _____ (Engineer) 2/2/21 (Date)

Payment of: $ $20,484.68
(Line 8 or other - attach explanation of the other amount)

is approved by: _____ (Owner) _____ (Date)

Approved by: _____ Funding or Financing Entity (if applicable) _____ (Date)

Unit Price Progress Estimate

Contractor's Application

Project: Spruce Street and Ridgeway Drive Extensions

Application Number: 6

Application Period: 12-01-2020 to 01-28-2021

Application Date: January 28, 2021

A				B	C	D	E	F	G	H	I	J
Item		Estimated Bid Quantity	Unit Price	Quantity Completed						Total Completed & Stored to Date (C+E+G)		% Comp.
				Previous Applications		This Application		Materials Stored				
Bid No.	Description			Quantity	Amount	Quantity	Amount	Quantity	Amount	Quantity	Amount	
1	CLEARING AND GRUBBING	1 L.S.	$12,000.00	1	$12,000.00					1	$12,000.00	100.0%
2	COMMON EXCAVATION	1 L.S.	$132,600.00	1	$132,600.00					1	$132,600.00	100.0%
3	IMPORTED FILL MATERIAL	3,200 C.Y.	$26.00									
4	SAW CUTTING ASPHALT PAVEMENT	451 L.F.	$3.35	66	$221.10	48	$160.80			114	$381.90	25.3%
5	ASPHALT PAVEMENT REMOVAL	562 S.Y.	$2.60	452	$1,175.20					452	$1,175.20	80.4%
6	8" PVC SANITARY SEWER MAIN	1,871 L.F.	$90.00	1877	$168,930.00					1877	$168,930.00	100.3%
7	48" DIA. SANITARY SEWER MANHOLE (7 Units)	94 V.F.	$310.25	93.47	$28,999.07					93.47	$28,999.07	99.4%
8	SANITARY MANHOLE RIM ADJUSTMENT	1 EACH	$550.00	1	$550.00					1	$550.00	100.0%
9	8" PVC WATER MAIN	2,750 L.F.	$64.10	2741	$175,698.10					2741	$175,698.10	99.7%
10	12"X 8" LIVE TAPPING TEE	2 EACH	$3,850.00	2	$7,700.00					2	$7,700.00	100.0%
11	HYDRANT ASSEMBLY	6 EACH	$5,535.00	6	$33,210.00					6	$33,210.00	100.0%
12	8" GATE VALVE	10 EACH	$1,995.00	9	$17,955.00					9	$17,955.00	90.0%
13	REMOVE CATCH BASIN	1 EACH	$500.00	2	$1,000.00					2	$1,000.00	200.0%
14	27" RCP STORM SEWER	76 L.F.	$67.95	76	$5,164.20					76	$5,164.20	100.0%
15	27" RCP APRON ENDWALL (AEW) W/ TRASHGUARD	1 EACH	$1,720.00	1	$1,720.00					1	$1,720.00	100.0%
16	24" RCP STORM SEWER	734 L.F.	$60.60	734	$44,480.40					734	$44,480.40	100.0%
17	24" RCP APRON ENDWALL (AEW) W/ TRASHGUARD	1 EACH	$1,455.00	1	$1,455.00					1	$1,455.00	100.0%
18	18" RCP STORM SEWER	495 L.F.	$51.90	364	$18,891.60					364	$18,891.60	73.5%
19	18" RCP APRON ENDWALL (AEW) W/ TRASHGUARD	1 EACH	$1,200.00	1	$1,200.00	1	$1,200.00			2	$2,400.00	200.0%
20	15" RCP STORM SEWER	88 L.F.	$46.90	88.5	$4,150.65					88.5	$4,150.65	100.6%
21	15" RCP APRON ENDWALL (AEW) W/ TRASHGUARD	1 EACH	$1,080.00	1	$1,080.00					1	$1,080.00	100.0%
22	12" RCP STORM SEWER	290 L.F.	$44.70	328.5	$14,683.95					328.5	$14,683.95	113.3%
23	48" DIA. STORM SEWER MANHOLE (5 Units)	16 V.F.	$723.75	11.18	$8,091.53	7.82	$5,659.73			19	$13,751.25	118.8%
24	60" DIA. STORM SEWER MANHOLE (1 Unit)	4 V.F.	$736.50	3.67	$2,702.96					3.67	$2,702.96	91.8%
25	2' X 3' STORM SEWER CATCH BASIN	16 EACH	$1,930.00	18	$34,740.00					18	$34,740.00	112.5%
26	POND OUTLET STRUCTURE	1 EACH	$4,420.00	1	$4,420.00					1	$4,420.00	100.0%
27	CULVERT REMOVAL W/O REPLACEMENT	2 EACH	$300.00	2	$600.00					2	$600.00	100.0%
28	53"X 34" HERCP CULVERT REMOVE AND REPLACE	204 L.F.	$137.00	204	$27,948.00					204	$27,948.00	100.0%
29	53"X 34" HERCP CULVERT APRON ENDWALL (AEW)	4 EACH	$1,725.00	4	$6,900.00					4	$6,900.00	100.0%
30	68"X 43" HERCP CULVERT	170 L.F.	$180.60	176	$31,785.60					176	$31,785.60	103.5%
31	68"X 43" HERCP CULVERT APRON ENDWALL (AEW)	4 EACH	$2,850.00	4	$11,400.00					4	$11,400.00	100.0%
32	RIP RAP, MEDIUM	120 C.Y.	$85.70	81	$6,941.70	39	$3,342.30			120	$10,284.00	100.0%
33	EXCAVATION BELOW SUBGRADE (EBS)	800 C.Y.	$18.10	1156	$20,923.60					1156	$20,923.60	144.5%
34	EBS BACKFILL 1 1/4" DENSE	800 TONS	$13.60	2382.95	$32,408.12					2382.95	$32,408.12	297.9%
35	EBS BACKFILL, BREAKER RUN	800 TONS	$14.15									
36	CRUSHED AGGREGATE BASE COURSE 1 1/4"	6029 TONS	$13.10	6549.94	$85,804.21					6549.94	$85,804.21	108.6%
37	REMOVE CURB AND GUTTER	272 L.F.	$5.00	145	$725.00					145	$725.00	53.3%
38	30" CURB AND GUTTER TYPE D	5,225 L.F.	$12.50	5240.5	$65,506.25					5240.5	$65,506.25	100.3%
39	7" CONCRETE DRIVEWAY APRON	1212 S.F.	$6.70									
40	4" CONCRETE SIDEWALK	25030 S.F	$3.80									
41	LOWER LAYER HMA PAVEMENT, 3 LT	1790 TONS	$65.81	1790	$117,799.90					1790	$117,799.90	100.0%
42	UPPER LAYER HMA PAVEMENT, 4 LT	1040 TONS	$62.90									

Unit Price Progress Estimate

Contractor's Application

Project: Spruce Street and Ridgeway Drive Extensions

Application Number: 6

Application Period: 12-01-2020 to 01-28-2021

Application Date: January 28, 2021

A				B	C	D	E	F	G	H	I	J
Item				Quantity Completed								
				Previous Applications		This Application		Materials Stored		Total Completed & Stored to Date (C+E+G)		%
Bid No.	Description	Estimated Bid Quantity	Unit Price	Quantity	Amount	Quantity	Amount	Quantity	Amount	Quantity	Amount	Comp.
1	CLEARING AND GRUBBING	1 L.S.	$12,000.00	1	$12,000.00					1	$12,000.00	100.0%
43	DITCH CHECKS	19 EACH	$158.00	6	$948.00					6	$948.00	31.6%
44	SILT FENCE	2450 L.F.	$1.50	2450	$3,675.00					2450	$3,675.00	100.0%
45	INLET PROTECTION	17 EACH	$85.00	17	$1,445.00					17	$1,445.00	100.0%
46	TRACKING PAD	2 EACH	$2,100.00	2	$4,200.00					2	$4,200.00	100.0%
47	TRAFFIC CONTROL	1 L.S.	$3,700.00	1	$3,700.00					1	$3,700.00	100.0%
48	SITE RESTORATION	1 L.S.	$36,800.00	0.7	$25,760.00					0.7	$25,760.00	70.0%
Alt 1	ASPHALT WEDGING	1 L.S.	$850.00	1	$850.00					1	$850.00	100.0%
50	6" DRAIN TILE	LF	$12.00	454	$5,448.00					454	$5,448.00	
51	HYDRANT MAN UPGRADE	LS	$1,250.00	1	$1,250.00					1	$1,250.00	
52	7" DRIVEWAY APRON & SIDEWALK	SF	$360.00									
53	WATER MAIN BLOW-OFFS	EACH	$100.00	-4	-$400.00					-4	-$400.00	
54	HYDRAULIC DAMS	EACH	$750.00	2	$1,500.00					2	$1,500.00	
55	18" RCP STORM SEWER CHANGES	EACH	$1,431.00	1	$1,431.00					1	$1,431.00	
56	HYDRAULIC DAM-EAGLE DR CULVERT	EACH	$1,500.00	1	$1,500.00					1	$1,500.00	
57	CULVERT TRANSITION GRADING	LS	$2,400.00	1	$2,400.00					1	$2,400.00	#DIV/0!
59	GEOGRID	SY	$1.50	1539	$2,308.50					1539	$2,308.50	#DIV/0!
60	Export Surplus Dirt	2686 CY	$22.00	2686	$59,092.00					2686	$59,092.00	100.0%
61	Eagle Dr CMP Culvert Extension	1 LS	$1,500.00			1	$1,500.00			1	$1,500.00	100.0%
62	Lower 18" RCP/ AEW	1 LS	$2,700.00			1	$2,700.00			1	$2,700.00	100.0%
63	Ditching & Restoration Lot 2	1 LS	$3,400.00			1	$3,400.00			1	$3,400.00	100.0%
64	Ditching East Eagle Dr	1 LS	$3,600.00			1	$3,600.00			1	$3,600.00	100.0%
	TOTAL				$1,246,668.63		$21,562.83				$1,268,231.46	

WAIVER OF LIEN

Date December 22, 2020

For value received, We hereby waive All rights and claims for lien on building about to be erected, being erected, erected, altered or repaired and to the appurtenances thereunto belonging,

for, Jackson Spruce St & Ridgeway Dr construction, Village of Jackson (Owner)

by, CGC Inc (Contractor)

same being situated in Washington County, State of Wisconsin, described as:

Testing

for all labor performed and for all material furnished for the erection, construction, alteration or repair of said building and appurtenances, to $5,227.03.

Mary E. Duncan

CGC, Inc.

WAIVER OF LIEN

Date December 22, 2020

For value received, We hereby waive All rights and claims for lien on building about to be erected, being erected, erected, altered or repaired and to the appurtenances thereunto belonging,

for, Jackson Spruce St & Ridgeway Dr construction, Village of Jackson (Owner)

by, Construction Cost Management LLC (Contractor)

same being situated in Washington County, State of Wisconsin, described as:

Trucking

for all labor performed and for all material furnished for the erection, construction, alteration or repair of said building and appurtenances, to $6,550.00.

owner

Construction Cost Management LLC

Scanned with CamScanner

WAIVER OF LIEN

Date December 22, 2020

For value received, We hereby waive All rights and claims for lien on building about to be erected, being erected, erected, altered or repaired and to the appurtenances thereunto belonging,

for, Jackson Spruce st & Ridgeway Dr construction, Village of Jackson (Owner)

by, County Materials Corporation (Contractor)

same being situated in Washington County, State of Wisconsin, described as:

Structures

for all labor performed and for all material furnished for the erection, construction, alteration or repair of said building and appurtenances, to $107,768.20.

COUNTY MATERIALS

Gil Bower

WAIVER OF LIEN

Date December 22, 2020

For value received, We hereby waive All rights and claims for lien on building about to be erected, being erected, erected, altered or repaired and to the appurtenances thereunto belonging,

for, Jackson Spruce St & Ridgeway Dr (Owner)

by, Ferguson (Contractor)

same being situated in Washington County, State of Wisconsin, described as:

Pipe & Fittings

for all labor performed and for all material furnished for the erection, construction, alteration or repair of said building and appurtenances, to 95,571.49.

Nikki Hilting - mcm

Nikki Hilting - Market Credit Manager

WAIVER OF LIEN

Date December 22, 2020

For value received, We hereby waive All rights and claims for lien on building about to be erected, being erected, erected, altered or repaired and to the appurtenances thereunto belonging,

for, Jackson Spruce St & Ridgeway Dr construction, Village of Jackson (Owner)

by, Gordon Work Zones (Contractor)

same being situated in Washington County, State of Wisconsin, described as:

Traffic Control

for all labor performed and for all material furnished for the erection, construction, alteration or repair of said building and appurtenances, to $2,600.00.

Corey Gordon 12/29/2020

COREY GORDON

WAIVER OF LIEN

Date December 22 2020

For value received, We hereby waive All rights and claims for lien on building about to be erected, being erected, erected, altered or repaired and to the appurtenances thereunto belonging,

for, Jackson Spruce St & Ridgeway Dr (Owner)

by, Langenecker Construction (Contractor)

same being situated in Washington County, State of Wisconsin, described as:

Trucking

for all labor performed and for all material furnished for the erection, construction, alteration or repair of said building and appurtenances, to $11,650.00.

Owner

Eric Langenecker

Langenecker Const

Scanned with CamScanner

WAIVER OF LIEN

December 30, 2020

For value received, We hereby waive ALL rights and claims for lien on land and on buildings about to be erected, being erected, erected, altered or repaired and to the appurtenances thereunto,

For Wondra Construction Inc Owner,

By Wondra Construction Inc Contractor,

For AGGREGATE MATERIALS.

Same being situated in Washington County, State of Wisconsin, described as

Spruce St & Ridgeway Dr, Jackson, WI.

For all labor performed and for all material furnished for the erection, construction, alteration or repair of said building and appurtenances, paid in full.

LANNON STONE PRODUCTS, INC.

Alyssa Zillmer

WAIVER OF LIEN

Date December 22, 2020

For value received, We hereby waive All rights and claims for lien on building about to be erected, being erected, erected, altered or repaired and to the appurtenances thereunto belonging,

for, Jackson Spruce St & Ridgeway Dr (Owner)

by, Mayville Limestone Inc (Contractor)

same being situated in Washington County, State of Wisconsin, described as:

Aggregate

for all labor performed and for all material furnished for the erection, construction, alteration or repair of said building and appurtenances, to $61,828.35.

Brenda Schultz

Secretary

VILLAGE OF JACKSON

Taking the lead in Washington County.

VILAGE OF JACKSON
REQUEST FOR PROPOSALS
Fiber Internet to Village of Jackson Buildings

The Village of Jackson is requesting a proposal and qualification statement from Fiber Internet Firms to assist with providing fiber internet service to the new Municipal Complex Building and all current Village of Jackson owned buildings. The completed proposals shall be returned to the Engineering Department on or before **12:30 PM on Friday, February 19, 2021.**

Background Information

1. The Village of Jackson is constructing a new Municipal Complex Building located at N168 W19851 Main Street that will hold the operations of Village Hall, Police Department, and Fire Department.

2. The Final completion of the Municipal Complex Building is scheduled for mid-September 2021.

3. Needing fiber internet service are the Village of Jackson other buildings consist of Community Center, Public Works Building (Streets, Parks, and Water Department), and Wastewater Plant.

4. The Village goal is to have one phone system that connects all the Village owned buildings.

Design for Internet Service

1. Provide fiber internet to all the following properties:

   A) Municipal Complex Building: N198 W19851 Main Street
   B) Community Center: N165 W20330 Hickory Lane
   C) Wastewater Treatment Plant: W194 N16658 Eagle Drive
   D) Public Works/Jackson Water Utility: W194 N16660 Eagle Drive

2. Provide and prepare all necessary drawings and design for the installation of conduit with lighted fiber for each building.

3. The Municipal Complex Building has two 4-inch conduits installed for use to serve the building. See attached plans showing the location of the conduits and D-mark location (Room 1B05) for the Municipal Complex Building.

4. The Village will assist in preparing and submitting all necessary permit applications.

W194N16660
Eagle Drive
Jackson, WI 53037
Phone: 262-677-0707
Fax: 262-677-8770

Mailing Address:
P.O. Box 637

www.villageofjackson.com

5. All conduit with fiber can be run in Village of Jackson street ROW (Right of Way).

Final Design

1. Provide a quote on monthly service fee associated with speed of internet service for each building.

Construction Services (if the project continues)

1. Attend pre-construction meeting and field meeting with Village Staff and Contractor.
2. Provide construction staking.
3. Provide construction inspection and management.
4. As-built survey, to confirm accurate construction.

Project Schedule (Tentative)

Request for proposal due	February 19, 2021
Village Board - Contract Award	March 9, 2021
Construction	May 2021
Complete Construction	August 2021

Consultant Engineer Qualifications

1. Qualifications of the key staff persons to be assigned to perform their scope of work, their experience and special skills.
2. Experience of firm in projects of similar scope.

Proposal

		Time & Material Cost, not to exceed
1.	Design, & Permitting	$
2.	Construction Cost	$
3.	Construction Services	

a. Construction Staking	$	Lump Sum
b. Construction Inspection		
c. As-Built Survey		

Total Amount **$**

Also, provide monthly service fees associated with the amount of internet speed.

If you have any questions regarding this Request for Proposal or if you would like to review this project in detail, please give me a call at (262) 677-0707.

Sincerely,

Brian W. Kober, P.E.
Director of Public Works/Village Engineer

Enclosures

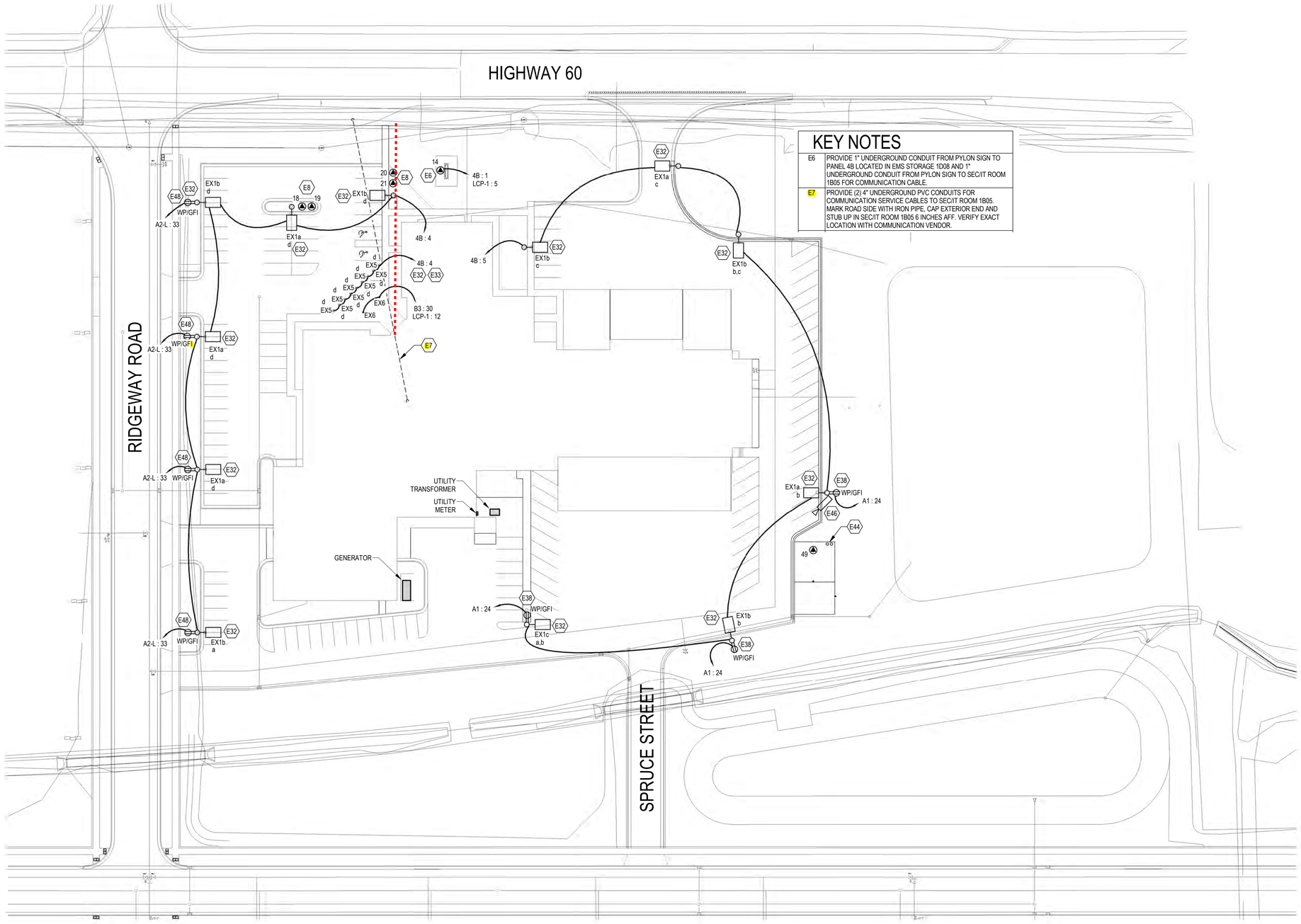

KEY NOTES

E6	PROVIDE 1" UNDERGROUND CONDUIT FROM PYLON SIGN TO PANEL 4B LOCATED IN EMS STORAGE 1D08 AND 1" UNDERGROUND CONDUIT FROM PYLON SIGN TO SEC/IT ROOM 1B05 FOR COMMUNICATION CABLE.
E7	PROVIDE (2) 4" UNDERGROUND PVC CONDUITS FOR COMMUNICATION SERVICE CABLES TO SEC/IT ROOM 1B05. MARK ROAD SIDE WITH IRON PIPE, CAP EXTERIOR END AND STUB UP IN SEC/IT ROOM 1B05 6 INCHES AFF. VERIFY EXACT LOCATION WITH COMMUNICATION VENDOR.
E8	PROVIDE (1) 1" UNDERGROUND CONDUIT AND #6 CONDUCTORS TO SERVE (2) FUTURE CAR CHARGERS. ROUTE CONDUIT TO PANEL B3-L LOCATED IN STORAGE/RECORD 1C15. CAP EXTERIOR END AND MARK WITH IRON PIPE.
E32	OCCUPANCY CONTROL OF FIXTURES SHALL BE CONTROLLED BY ZONES AS INDICATED.
E33	FIXTURE SHALL BE CONTROLLED BY A WIRELESS DIMMING POWER PACK LOCATED INSIDE THE BUILDING ABOVE THE VESTIBULE 1C01 CEILING.
E38	WP/GFI DUPLEX RECEPTACLE SHALL BE MOUNTED 6" ABOVE POLE HANDHOLE.
E44	RUN (2) 1-1/2" CONDUITS FROM BURN TOWER TO 6" AFF IN ELECTRICAL ROOM 1D28. VERIFY REQUIREMENTS WITH FIRE DEPARTMENT BEFORE ROUGH-IN.
E46	RUN DIRECT BURIAL GEL FILLED CAT 6 CABLE FOR CAMERA IN A 1 INCH CONDUIT TO INSIDE APPARATUS BAY ADJACENT TO SOUTHEAST MAN DOOR. CONDUIT SHALL TERMINATE 10 FEET AFF.
E48	PROVIDE 120 VOLT CIRCUIT INDICATED FOR FUTURE WP/GFI DUPLEX RECEPTACLE.

KEY NOTES

E6	PROVIDE 1" UNDERGROUND CONDUIT FROM PYLON SIGN TO PANEL 4B LOCATED IN EMS STORAGE 1D08 AND 1" UNDERGROUND CONDUIT FROM PYLON SIGN TO SEC/IT ROOM 1B05 FOR COMMUNICATION CABLE.
E7	PROVIDE (2) 4" UNDERGROUND PVC CONDUITS FOR COMMUNICATION SERVICE CABLES TO SEC/IT ROOM 1B05. MARK ROAD SIDE WITH IRON PIPE, CAP EXTERIOR END AND STUB UP IN SEC/IT ROOM 1B05 6 INCHES AFF. VERIFY EXACT LOCATION WITH COMMUNICATION VENDOR.

1 ELECTRICAL SITE PLAN

SCALE: 1" = 40'-0"

N

REVISIONS

NO.	DATE	DESCRIPTION
1	03/02/20	Addendum No. 1

800-472-7372
www.cedarcorp.com

ARCHITECT/ENGINEER:
Cedar corporation
engineers • architects • planners • environmental specialists
land surveyors • landscape architects • interior designers

CONSULTANT:
ibc engineering services, inc.
WISCONSIN, ILLINOIS, FLORIDA
IBC PROJECT NO. 7019101

THIS BAR APPEARS 2" LONG ON FULL SIZE SHEETS.

VILLAGE OF JACKSON

MUNICIPAL COMPLEX
STATE HWY 60
JACKSON, WI 53037

JOB NO. J5789-002

DRAWN BY: TO | CHECKED BY: DH

ISSUE DATE: MARCH 18, 2020

SET TYPE: CONSTRUCTION

ELELCTRICAL SITE PLAN

SHEET NO. E5100

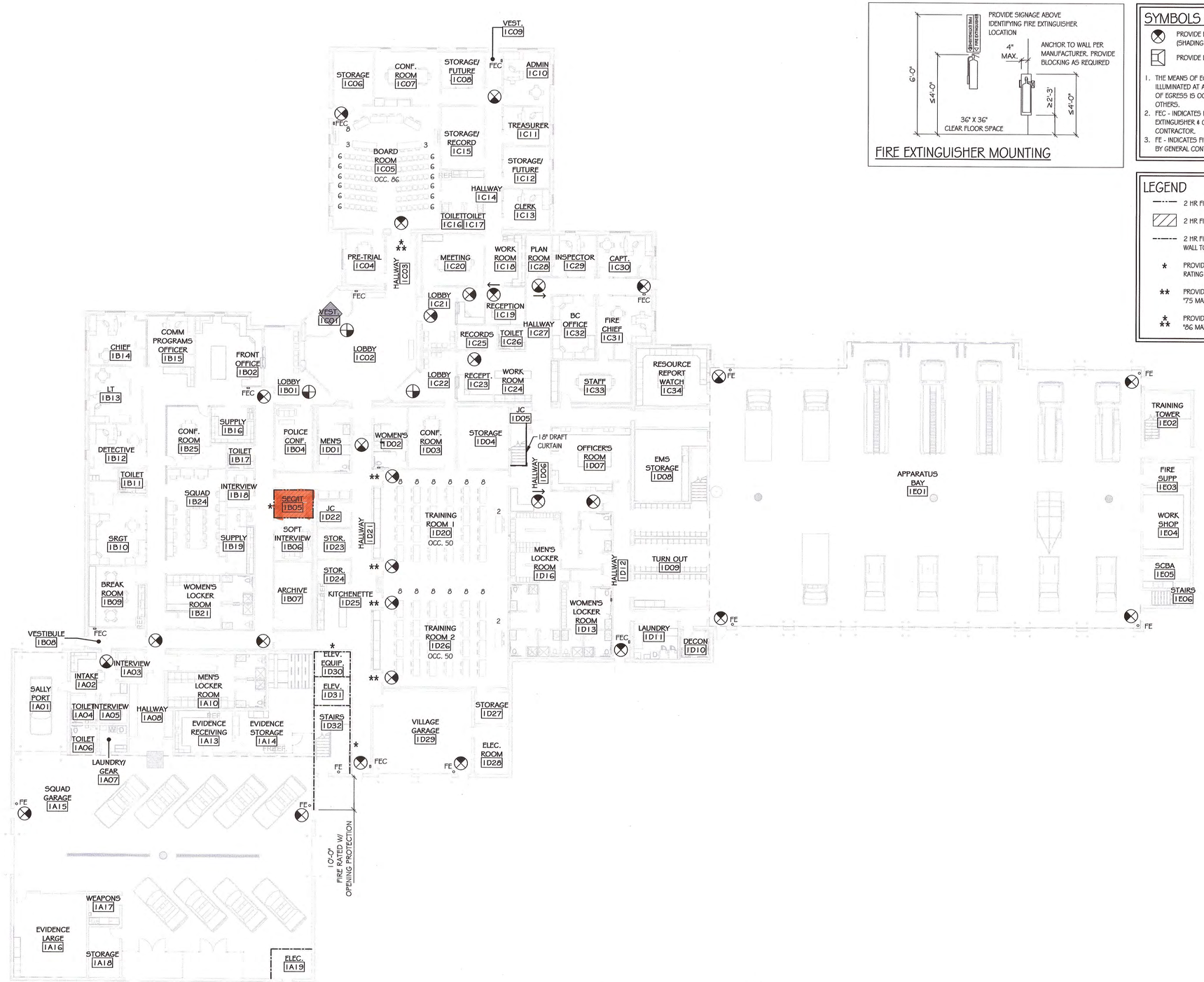

1 / A001 LIFE SAFETY PLAN - FIRST FLOOR
1/16" = 1'-0"

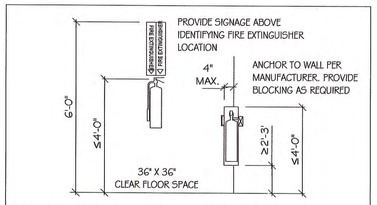

FIRE EXTINGUISHER MOUNTING

SYMBOLS & NOTES:

PROVIDE EMERGENCY EXIT SIGN (ARROW INDICATES DIRECTION (SHADING INDICATES # FACES).

PROVIDE DOWN LIGHTING EGRESS WALL PACKS, BY E.C.

1. THE MEANS OF EGRESS, INCLUDING THE EXIT DISCHARGE SHALL BE ILLUMINATED AT ALL TIMES THE BUILDING SPACE SERVED BY THE MEANS OF EGRESS IS OCCUPIED. ELECTRICAL & LIGHTING TO BE DESIGNED BY OTHERS.
2. FEC - INDICATES FIRE EXTINGUISHER SEMI-RECESSED CABINET. EXTINGUISHER & CABINET PROVIDED & INSTALLED BY GENERAL CONTRACTOR.
3. FE - INDICATES FIRE EXTINGUISHER. EXTINGUISHER PROVIDED & INSTALLED BY GENERAL CONTRACTOR.

LEGEND

2 HR FIRE RATED WALL - UL DESIGN NO. U423

2 HR FIRE RATED CEILING- UL DESIGN NO. G535

2 HR FIRE RATED WALL- UL DESIGN NO. U906 WALL TO EXTEND TO UNDERSIDE OF ROOF DECK

* PROVIDE PERMANENT SIGNAGE FOR ROOM FIRE RATING IN ACCORDANCE W/ APPLICABLE CODES

** PROVIDE OCCUPANT LOAD SIGN "75 MAX OCCUPANT LOAD"

*, ** PROVIDE OCCUPANT LOAD SIGN "86 MAX OCCUPANT LOAD"

REVISIONS		
NO.	DATE	DESCRIPTION

ARCHITECT/ENGINEER:

Cedar corporation

engineers • architects • planners • environmental specialists
land surveyors • landscape architects • interior designers

800-472-7372
www.cedarcorp.com

CONSULTANT:

VILLAGE OF JACKSON

MUNICIPAL COMPLEX
STATE HWY 60
JACKSON, WI 53037

JOB NO.	
J5789-002	
DRAWN BY: KIM	CHECKED BY: CAS
ISSUE DATE FEBRUARAY 2020	
SET TYPE BID SET	

LIFE SAFETY PLAN- FIRST FLOOR

SHEET NO. A001

SHEET NOTES

1.	SEE ARCHITECTURAL DRAWINGS FOR TV MOUNTING HEIGHTS. SEE DETAILS 4/E503 FOR MORE INFORMATION.

KEY NOTES

E2	DURESS BUZZER/STROBE SHALL BE EDWARDS "7007BB-N5" 120 VOLT, BLUE LENS AND SHALL BE CONNECTED TO DURESS PUSHBUTTON IN RECEPTION 1C19.
E3	PUSHBUTTON SHALL LOCK EXTERIOR VESTIBULE DOORS.
E5	PROVIDE A 3/4" CONDUIT FROM ELEVATOR CONTROL PANEL TO SEC/IT 1B05 FOR ELEVATOR POTS CABLES.
E14	PROVIDE EZ PATH SERIES "EZDP44SZ" FOR COMMUNICATION CABLES.
E23	PROVIDE 1" CONDUIT STUB TO ACCESSIBLE CEILING SPACE ABOVE FOR AV CABLING.
E36	CONTROL FOR RADIO CONTROLLER HEAD. PROVIDE 4" SQUARE JUNCTION BOX WITH 1" CONDUIT STUB TO ACCESSIBLE CEILING. VERIFY REQUIREMENTS WITH RADIO VENDER.
F8	PROVIDE A DEDICATED ANALOG PHONE LINE TO SERVE ELEVATOR SYSTEM.

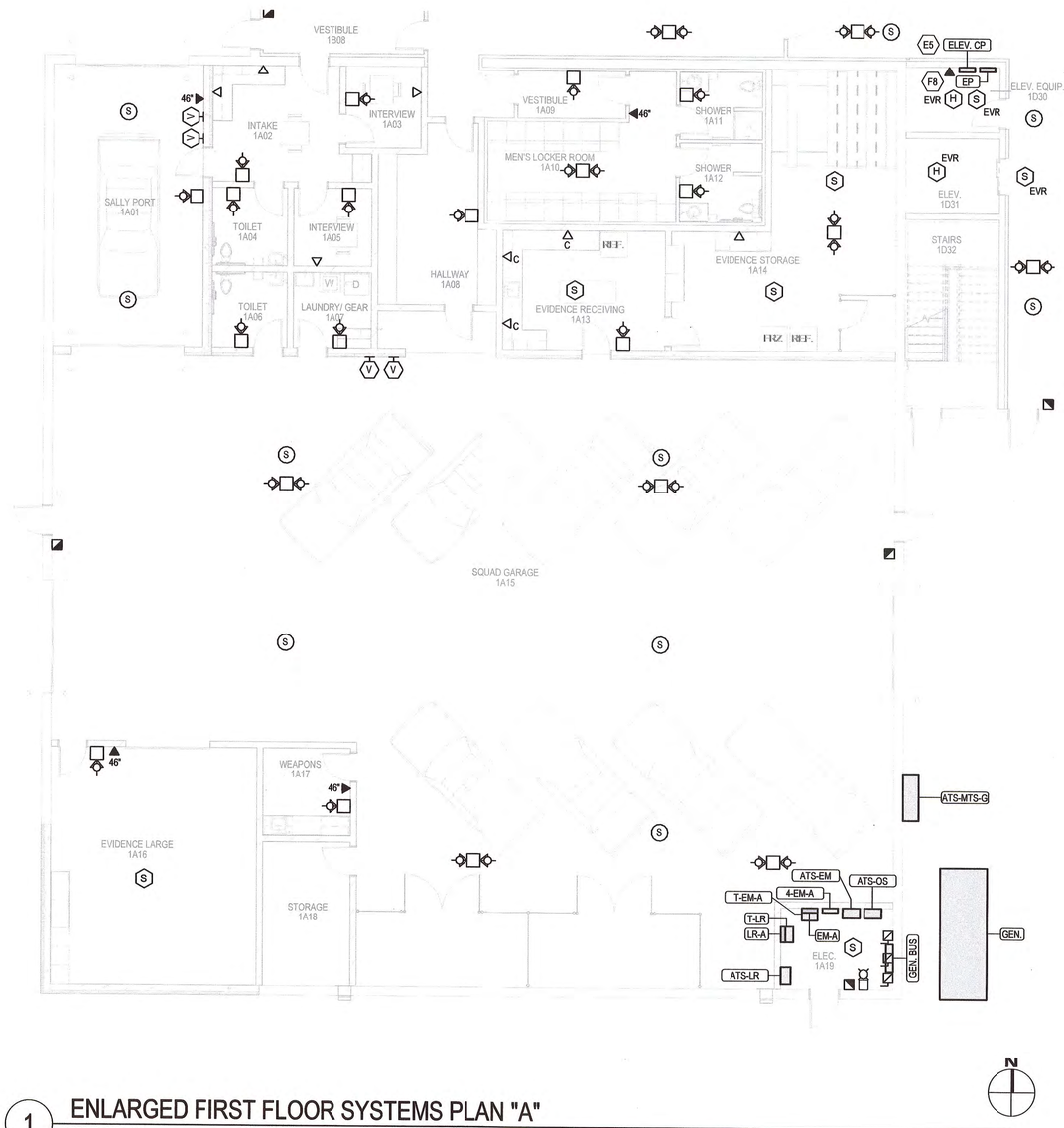

1 ENLARGED FIRST FLOOR SYSTEMS PLAN "A"

SCALE: 1/8" = 1'-0"

2 ENLARGED FIRST FLOOR SYSTEMS PLAN "B"

SCALE: 1/8" = 1'-0"

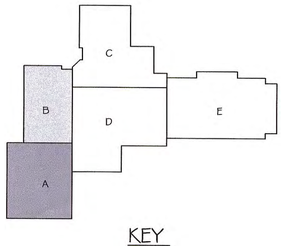

KEY PLAN

REVISIONS		
NO.	DATE	DESCRIPTION

ARCHITECT/ENGINEER:
Cedar corporation
engineers • architects • planners • environmental specialists
land surveyors • landscape architects • interior designers
800-472-7372
www.cedarcorp.com

CONSULTANT:
ibc engineering services, inc.
WISCONSIN | ILLINOIS | FLORIDA
IBC PROJECT NO: 2019101

THIS BAR APPEARS 2" LONG ON FULL SIZE SHEETS.

VILLAGE OF JACKSON

MUNICIPAL COMPLEX
STATE HWY 60
JACKSON, WI 53037

JOB NO.	
J5789-002	
DRAWN BY: DMS	CHECKED BY: DH
ISSUE DATE FEBRUARY 2020	
SET TYPE BID SET	

ENLARGED FIRST FLOOR SYSTEMS PLANS "A" & "B"

SHEET NO.
E301AB

VILLAGE OF JACKSON

Taking the lead in Washington County.

VILAGE OF JACKSON
REQUEST FOR PROPOSALS
New Phone System for Village of Jackson Buildings

The Village of Jackson is requesting a proposal and qualification statement from Phone Vendors to assist with providing a phone system to serve the new Municipal Complex Building and all current Village of Jackson owned buildings. The completed proposals shall be returned to the Engineering Department on or before **12:30 PM on Friday, February 19, 2021.**

Background Information

1. The Village of Jackson is constructing a new Municipal Complex Building located at N168 W19851 Main Street that will hold the operations of Village Hall, Police Department, and Fire Department. The Final completion of the Municipal Complex Building is scheduled for mid-September 2021.

2. Needing a phone system to serve the Village of Jackson other buildings consist of Community Center, Public Works Building (Streets, Parks, and Water Department), and Wastewater Plant.

3. The Village goal is to have one phone system that connects all the Village owned buildings.

Design for Phone System

1. The one phone system would serve all the following properties:
   A) Municipal Complex Building: N198 W19851 Main Street
   B) Community Center: N165 W20330 Hickory Lane
   C) Wastewater Treatment Plant: W194 N16658 Eagle Drive
   D) Public Works/Jackson Water Utility: W194 N16660 Eagle Drive

2. Number of Phones needed per Building/Department:
   A) New Municipal Complex – Village Hall – seven (7) phones
   B) New Municipal Complex - Police Department – eighteen (18) phones
   C) New Municipal Complex – Fire Department – twenty (20) phones
   D) Community Center – eight (8) phones and four (4) that call 911
   E) Wastewater Treatment Plant – three (3) phones
   F) Public Works/Jackson Water Utility – eight (8) phones

Final Design

1. Provide a quote on monthly service fee associated with phone service for each building.

W194N16660
Eagle Drive
Jackson, WI 53037
Phone: 262-677-0707
Fax: 262-677-8770

Mailing Address:
P.O. Box 637

www.villageofjackson.com

Construction Services (if the project continues)

1. Attend pre-construction meeting and field meeting with Village Staff.

2. Provide management of installation.

3. As-built survey, to confirm accurate of installation.

Project Schedule (Tentative)

Request for proposal due	February 19, 2021
Village Board - Contract Award	March 9, 2021
Select & Order Equipment	May 2021
Complete Installation	August 2021

Consultant Engineer Qualifications

1. Qualifications of the key staff persons to be assigned to perform their scope of work, their experience and special skills.

2. Experience of firm in projects of similar scope.

Proposal

		Time & Material Cost, not to exceed
1.	System Cost	$
2.	Installation Services	
	a. Cost per phone	$
	b. Cost per monthly fee	$

If you have any questions regarding this Request for Proposal or if you would like to review this project in detail, please give me a call at (262) 677-0707.

Sincerely,

Brian W. Kober, P.E.
Director of Public Works/Village Engineer

February 18, 2021

Brian Kober, P.E.
Director of Public Works
Village of Jackson
P.O. Box 147
Jackson, WI 53037
dirpubwks@villageofjackson.com

RE: **Proposal for Water & Sanitary Sewer System Planning**

Brian:

Thank you for the opportunity to assist the Village of Jackson Water Utility with water and sanitary system expansion. This proposal outlines the project objectives, our detailed scope of services, and professional fees for the project. Our goal is to identify the water and sanitary expansion options to serve the proposed areas shown in Figure 1.

Scope of Services:

Proposal for Professional Services to identify expansion options for potential developments in the Village on Jackson. There are two locations identified in Figure 1 that will be evaluated. The first task will address the water service extension Location 1 and the second task will address the sanitary sewer extension in Location 2, system expansion on Sherman Road and the capacity of the 30-inch diameter interceptor sewer. Listed below is our Scope of Services for each task.

Task 1 - Water Service Expansion

- Review existing water system infrastructure and topographical information in the area of the proposed development to determine the maximum service elevation of the proposed development.
- Determine potential water service demand and fire flow demand for the development.
- Add proposed development into the existing hydraulic water model and assign an average day, maximum day, and maximum hour demand for proposed development.

- Determine the optimum water extension configuration for the development. The hydraulic model will be used to determine if the development can be served from the lower pressure district (pressure district 1) or will the development be required to increase water pressure to meet DNR code for static and available fire flow requirements.
- Provide cost estimate based on the proposed water expansion to serve the proposed development.
- Investigate extending the existing high pressure system on Pleasant Valley Rd to the proposed development
- Review the proposed configuration for water system extension with Utility staff
- After staff review finalize the configuration and cost estimate of the water system extension in a letter report. Report will be used to help determine the impact fee for water system extension to the proposed development.

Task 2 - Sanitary Sewer Expansion

- Review existing sanitary sewer infrastructure in the area of the proposed extensions to help determine the capacity of the Twin Creeks lift station, and existing collection system
- Assign sanitary sewer flow rates based on the proposed development density
- Using gravity flow design, determine the capacity of sanitary sewer service for the proposed development, including minimum service elevation and maximum pipe capacity
- Review and determine the service area for sanitary sewer along Sherman Road west of Sherman Parc Circle.
- Review and determine the maximum design capacity of the 30-inch diameter sanitary sewer interceptor from the Twin Creeks lift station to the Waste Water Treatment Plant (WWTP)
- Review the sanitary sewer system expansion and interceptor capacity with Utility staff
- After staff review finalize in a letter report that can be used to assist in the expansion of the sanitary sewer service area.

COMPENSATION

City Water LLC will complete each task outlined in the scope of services detailed above based on the hourly rate fee table included at the end of this proposal. City Water will obtain prior written authorization from the Village prior to exceeding the estimated fee.

Item	Hourly not-to-exceed fee
Task 1 - Water System Analysis	$4,000
Task 2 - Sanitary Sewer Analysis	$5,000
NTE fee:	$9,000

Meetings with the Village staff and/or board will add an additional $300/per meeting, which includes time and mileage, and all necessary City Water staff.

We appreciate the opportunity to assist the Jackson Water Utility in completing this rate analysis. Please contact me if you have any questions 414.559.2562

Sincerely,

Thomas Nennig, P.E.
President
City Water LLC

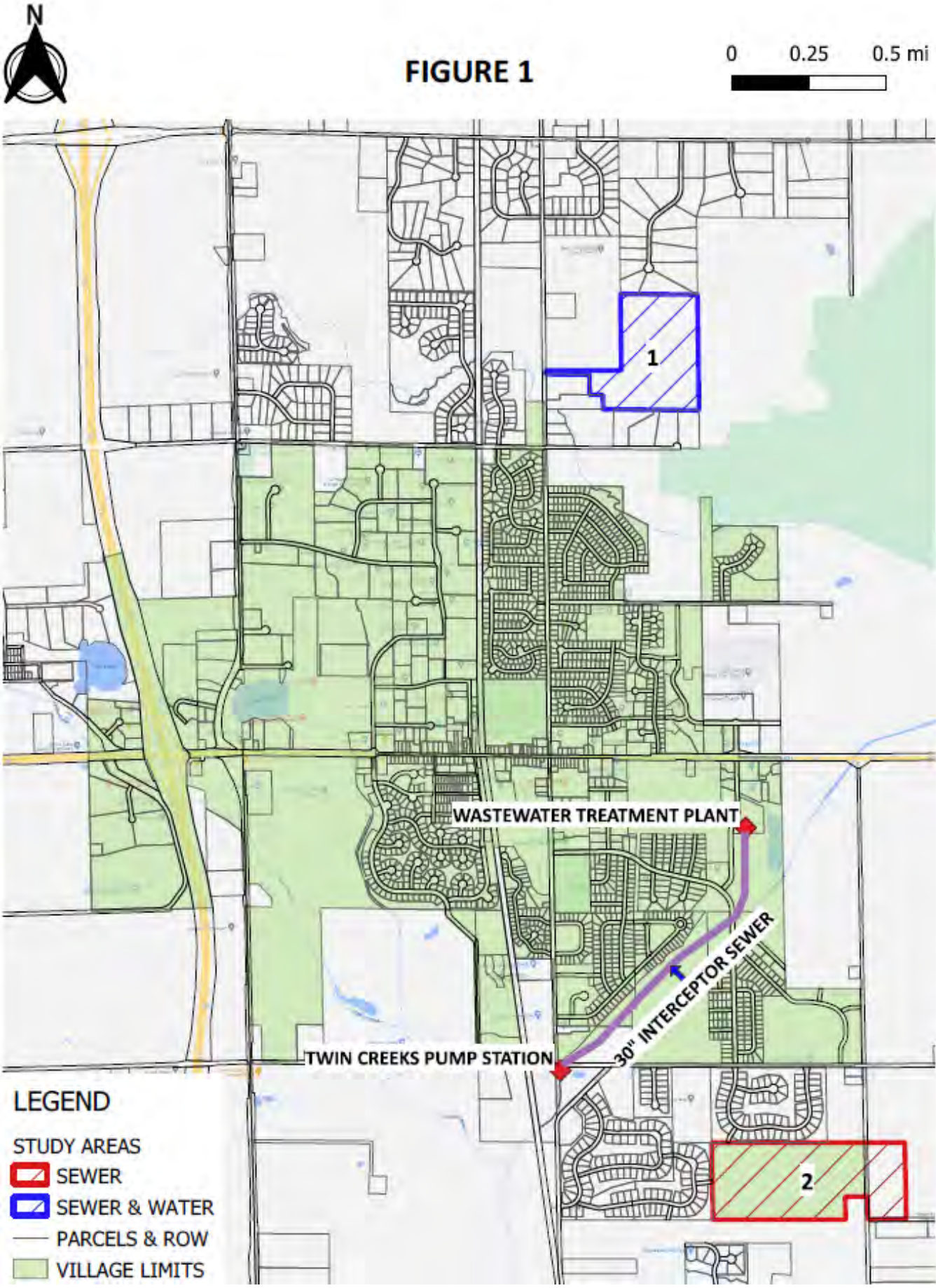
N
FIGURE 1
0
0.25
0.5 mi
1
2
WASTEWATER TREATMENT PLANT
30" INTERCEPTOR SEWER
TWIN CREEKS PUMP STATION
LEGEND
STUDY AREAS
SEWER
SEWER & WATER
PARCELS & ROW
VILLAGE LIMITS

Memorandum of Understanding

between

THE VILLAGE OF JACKSON

and

THE WISCONSIN DEPARTMENT OF TRANSPORTATION

This memorandum summarizes the agreement between the Village of Jackson (Village) and the Wisconsin Department of Transportation (State) for the construction of the roadway improvements necessary to accommodate the Jackson TIF development sites generally located on lands north and south of WIS 60, east of Hemlock Street extended, and west of Eagle Drive.

1. GENERAL

A. Nothing in this memorandum of understanding (MOU) shall limit or otherwise affect the sovereign immunity of the State of Wisconsin.

B. This MOU shall not be construed to create third-party beneficiaries, nor to create a partnership between the Village and State.

C. This MOU contains the entire agreement between the parties and all prior negotiations and discussions are hereby merged into and superseded by this MOU.

D. This MOU may be signed in counterparts.

E. The alteration of highway features is a police power and does not entitle any person, public or private, to any damages or compensation for such work. This MOU shall not be construed to create in any person or parcel of property a property interest in a median opening or any other feature within the State's highway.

F. Nothing in this MOU referencing costs that could be or will be incurred by the Village is intended to limit the Village's ability to pass those costs on to land owners or developers through development agreements, zoning approvals, special assessments, impact fees, and/or any other lawful method.

G. This MOU assumes the entirety of the proposed developments (depicted on Exhibit A attached hereto and incorporated herein by this reference) are constructed with the uses as shown in the Village of Jackson TIF District (WisDOT Log #248108) Traffic Impact Analysis dated June 4, 2020. Any change in use of the properties set forth on Exhibit A that increases the anticipated traffic volumes from the development will require review by the State. The State reserves the right to impose additional conditions and/or require additional improvements if the proposed use(s) to be changed increase the traffic volumes from any parcel within the development limits.

H. Subject to the foregoing, the following is the list of improvements to be constructed by the Village to accommodate the proposed development:

   a. Construct all improvements at intersections described in the State letter dated September 14, 2020 (Exhibit B attached hereto and incorporated herein by this reference) at the following timeframes.

      i. Construct the 2020 Build Improvements with the construction of the south approach of Ridgeway Drive and installation of the Emergency Exit Only Driveway.

Draft

ii. Construct the 2035 Build Improvements at the WIS 60 & Ridgeway Drive intersection prior to the construction of any structure within the southwest quadrant of the WIS 60 & Ridgeway Drive intersection (Shopping Center 1 or High Turnover Restaurant as shown on Exhibit A) unless approved otherwise by the State in writing.

1. The preferred alternative shall be determined by a Phase II ICE report that is paid for and completed by the Village.
2. If the Phase II ICE report determines the Traffic Signal Alternative is the preferred alternative, the installation of traffic signals will require WisDOT authorization. The installation of the traffic signals may be delayed to a later date subject to the results of the Phase II ICE Report. The Village of Jackson shall be responsible for the cost and the installation of the traffic signals when they are approved for installation.

iii. Construct the 2035 Build Improvements at the Shopping Center #2/Office Building driveways when the permits are requested to construct those driveways. Access from Shopping Center #2 shall be provided to Spruce Street and Spruce Street shall be constructed from Ridgeway Drive to Eagle Drive prior to access being granted to WIS 60.

iv. Construct the 2035 Build Improvements at the WIS 60 & Eagle Drive intersection prior to the opening of any of the eastern commercial properties (Shopping Centers 2, 3 or 4 as shown on Exhibit A).

I. This agreement shall remain in effect until all the improvement requirements listed in the State letter dated September 14, 2020 are complete subject to 1.H.a above. After all the requirements of the State letter have been fulfilled, the provisions of this agreement will terminate, and except for paragraphs 1.G, above, and 3.B, below, this MOU will become null and void.

J. The Village and the State participated fully in the drafting of each and every part of this MOU. This MOU shall not be construed strictly in favor of or against either party. It shall be construed simply and fairly to each party.

2. THE VILLAGE AGREES AS FOLLOWS:

A. To update the Jackson TIF TIA in accordance with State Guidelines if the proposed uses within the development area change and would generate increased trips to WIS 60;

B. To submit to the State permit plans for the construction of all required improvements to State highways that conform to the State's Facilities Development Manual;

C. To construct all the improvements listed within this MOU that are required to mitigate the traffic impact of the development, as defined in paragraph 1.H., above, in conformity with the State's Facilities Development Manual;

D. To reimburse the State via a reduction in the Village's general transportation aids in the event the State is required to undertake the work to mitigate any traffic impact designated as a Village or developer responsibility as defined in Item 1.H above due to the Village declining to have the work completed; and

Draft

E. The Village, at its own cost, has the option to update the TIA based on actual traffic counts to determine if the development trips have decreased from what was anticipated in the original TIA and if some of the improvements required to accommodate the development in the State Letter dated September 14, 2020 are not longer needed subject to agreement by the State.

3. STATE AGREES AS FOLLOWS:

A. To review and future updated TIA(s) or other traffic analysis for the Jackson TIF development, pursuant to paragraphs 2.A. and 2.E. above, and accept those that are technically correct per the State's TIA Guidelines Manual;

B. To review the permit plans submitted by the Village, pursuant to paragraph 2.B., above, and to approve those plans only if they fully conform to the State's Facility Development Manual and otherwise meet the State's requirements; and

C. In addition to and separate from the Village's obligation to construct and pay for any improvements to State highways under paragraphs 2.C. and D., above, the State reserves the right to further modify the public street connections to State highways including the prohibition of certain intersection movements, at the State's cost, to satisfy the required design standards on any future road construction project.

4. AUTHORIZATION TO EXECUTE THIS AGREEMENT.

A. Tony Barth, Planning Chief of the Southeast Region of the Wisconsin Department of Transportation, by executing this Memorandum of Understanding, hereby avers that he is duly authorized to sign this Memorandum of Understanding on behalf of the Wisconsin Department of Transportation and to bind the Wisconsin Department of Transportation to all of Wisconsin Department of Transportation's obligations and agreements set forth herein.

B. Mike Schwab, Village Board President of the Village of Jackson, Washington County, Wisconsin, by executing this Memorandum of Understanding hereby avers that he is duly authorized to sign this Memorandum of Understanding on behalf of the Village of Jackson, and to bind the Village of Jackson to all of the Village of Jackson's obligations and agreements set forth herein.

The remainder of this page was intentionally left blank. Signatures follow on the next page.

Draft

Village of Jackson

By: _____
Mike Schwab

Title: Village Board President, Village of Jackson, Washington County

Date: _____

Contract Approval

_____

Village Attorney Date

_____

Comptroller Date

_____

Village Clerk Date

_____

[title of any other person needed for approval] Date

Wisconsin Department of Transportation

By: _____
Tony Barth

Title: Southeast Region Planning Chief

Date: _____

Draft

TIF District TIA

Village of Jackson

Village of Jackson, Brian Kober, DPW

Prepared by:

Date: June 4, 2020

SRF No. 13292

Table of Contents

Chapter 1 Introduction and Executive Summary 1-1

A. Purpose of Report and Study Objectives 1-1

B. Executive Summary 1-1

C. Chapter 1 Exhibits 1-6

Chapter 2 Proposed Development 2-1

A. On-Site Development 2-1

B. Study Area 2-2

C. Off-Site Land Use and Development 2-3

D. Site Accessibility 2-3

Chapter 3 Analysis of Existing Conditions 3-1

A. Physical Characteristics 3-1

B. Traffic Volumes 3-1

C. Capacity/Level of Service 3-1

D. Sources of Data 3-3

E. Chapter 3 Exhibits 3-3

Chapter 4 Projected Traffic 4-1

A. Background Traffic Forecasting 4-1

B. On-Site and Off-Site Development Traffic Forecasting 4-1

C. Build Traffic 4-4

D. Chapter 4 Exhibits 4-4

Chapter 5 Traffic and Improvement Analysis 5-1

A. Site Access 5-1

B. Capacity/Level of Service Analysis 5-1

C. Queueing Analysis 5-6

D. Pedestrian, Bicycle, and Multi-Use Trail Considerations 5-6

E. Speed Consideration/Sight Distance 5-7

F. Traffic Control Needs 5-7

G. Warrant Analysis 5-8

H. Chapter 5 Exhibits 5-9

Chapter 6 Conclusions and Recommendations 6-1
A. Recommendations 6-1
B. Conclusion 6-3
C. Chapter 6 Exhibits 6-3

List of Exhibits

Exhibit 1-1: Site Plan 1-7
Exhibit 1-2: Base Year Background Traffic Recommended Improvements 1-8
Exhibit 1-3: Base Year Build Traffic Recommended Improvements 1-9
Exhibit 1-4: Interim Year Background Traffic Recommended Improvements 1-10
Exhibit 1-5: Interim Year Build Traffic Recommended Improvements 1-11
Exhibit 1-6: Horizon Year Background Traffic Recommended Improvements 1-12
Exhibit 1-7: Horizon Year Build Traffic Recommended Improvements 1-13
Exhibit 2-1: Site Location Map 2-5
Exhibit 2-2: Site Plan 2-6
Exhibit 2-3: Development Staging Detail 2-7
Exhibit 2-4: Existing and Proposed Land Use for Study Area 2-8
Exhibit 3-1A: Existing Transportation System 3-4
Exhibit 3-2A: Existing Traffic Volumes 3-5
Exhibit 3-2B: Base Year Background Traffic Volumes 3-6
Exhibit 3-3: Base Year Background Traffic Capacity/LOS Analysis 3-7
Exhibit 4-1: Interim Year Background Traffic Volumes 4-5
Exhibit 4-2: Horizon Year Background Traffic Volumes 4-6
Exhibit 4-3: Trip Generation Table 4-7
Exhibit 4-4: Trip Distribution 4-8
Exhibit 4-5A: Base Year On-site Development Traffic Assignment–New Trips 4-9
Exhibit 4-5D: Base Year On-site Development Traffic Assignment–Driveway Trips 4-10
Exhibit 4-6A: Interim Year On-site Development Traffic Assignment–New Trips 4-11
Exhibit 4-6D: Interim Year On-site Development Traffic Assignment–Driveway Trips 4-12
Exhibit 4-7.1A: Horizon Year On-site Development Traffic Assignment–New Trips 4-13
Exhibit 4-7.1C: Horizon Year On-site Development Traffic Assignment–Pass-By Trips 4-14
Exhibit 4-7.1D: Horizon Year On-site Development Traffic Assignment–Driveway Trips 4-15
Exhibit 4-8.2A: Horizon Year On-site Development Traffic Assignment–New Trips 4-16
Exhibit 4-7.2C: Horizon Year On-site Development Traffic Assignment–Pass-By Trips 4-17
Exhibit 4-7.2D: Horizon Year On-site Development Traffic Assignment–Driveway Trips 4-18
Exhibit 4-12: Base Year Build Development Traffic Volumes 4-19
Exhibit 4-13: Interim Year Build Development Traffic Volumes 4-20

Exhibit 4-14: Horizon Year Build Development Traffic Volumes 4-21
Exhibit 5-1: – Interim Year Background Traffic - Capacity/LOS Analysis..... 5-10
Exhibit 5-2: Horizon Year Background Traffic - Capacity/LOS Analysis 5-11
Exhibit 5-3: Base Year Build Development - Capacity/LOS Analysis 5-12
Exhibit 5-4: Interim Year Build Development - Capacity/LOS Analysis 5-13
Exhibit 5-5.1: Horizon Year Build Development Alt 1- Capacity/LOS Analysis 5-14
Exhibit 5-6.2: Horizon Year Build Development Alt 1- Capacity/LOS Analysis 5-15
Exhibit 5-10: Base Year Background Traffic – Improved Capacity/LOS Analysis 5-16
Exhibit 5-11: Interim Year Background Traffic – Improved Capacity/LOS Analysis..... 5-17
Exhibit 5-12: Horizon Year Background Traffic – Improved Capacity/LOS Analysis 5-18
Exhibit 5-13: Base Year Build Development – Improved Capacity/LOS Analysis..... 5-19
Exhibit 5-14: Interim Year Build Development – Improved Capacity/LOS Analysis..... 5-20
Exhibit 5-15.1: Horizon Year Build Development – Improved Capacity/LOS Analysis..... 5-21
Exhibit 5-16.2: Horizon Year Build Development – Improved Capacity/LOS Analysis..... 5-22
Exhibit 5-20: Maximum Queue Lengths, Improved Transportation System– Base Year Background Traffic..... 5-23
Exhibit 5-21: Maximum Queue Lengths, Improved Transportation System– Interim Year Background Traffic 5-24
Exhibit 5-22: Maximum Queue Lengths, Improved Transportation System– Horizon Year Background Traffic..... 5-25
Exhibit 5-23: Maximum Queue Lengths, Improved Transportation System– Base Year Build Development 5-26
Exhibit 5-24: Maximum Queue Lengths, Improved Transportation System– Interim Year Build Development 5-27
Exhibit 5-25.1: Maximum Queue Lengths, Improved Transportation System– Horizon Year Build Development Alt 1 . 5-28
Exhibit 5-25.2: Maximum Queue Lengths, Improved Transportation System– Horizon Year Build Development Alt 2 . 5-29
Exhibit 6-1A Eagle Drive Background Concept 1 – Roundabout 6-4
Exhibit 6-1B Ridgeway Drive Background Concept 1 – Roundabout 6-5
Exhibit 6-1C Ridgeway Drive Build Concept 1 - Signalized Intersection with Turn Lanes.....6-6

M:\Projects\13000\13292\TraffStudy\Reports\Report\Village of Jackson Tiff TIA.docx

Chapter 1 Introduction and Executive Summary

A. Purpose of Report and Study Objectives

The Village of Jackson intends to develop a Tax Increment Finance (TIF) District on an approximately 40-acre property on their eastern village limits. This district would be developed into municipal buildings housing the Village offices and fire/safety services, and a logical mix of multi-family residential, commercial, and office. Access to the development is proposed on WIS 60 at several locations as described in this document. Internal access to this development is being proposed by an extension of Spruce Street to Eagle Drive.

An initial review was provided to WisDOT on August 12, 2019 and WisDOT provided a letter of review and required parameters for the commencement of a formal Traffic Impact Analysis on October 14, 2019.

The only property within this TIF district that is under active construction is the public safety and municipal office building. Access for that development, proposed as an extension of Ridgeway Drive to the south of WIS 60 and an emergency-only access east of Ridgeway, are undergoing access/permit coordination with WisDOT.

One primary purpose of this TIA is to provide detailed operational information for the extension of Ridgeway Drive to the south, to allow the active public safety project and access request to be completed in spring/summer 2020. A secondary purpose of the study is to provide long-range operational information for the gradual development of the property, ensuring active coordination between Village of Jackson and WisDOT as future access permit requests are initiated.

This TIA adheres to the WisDOT Bureau of Traffic Operations Traffic Impact Analysis Guidelines (May 2019) and provides study of years 2020, 2030, and 2035, and investigates current and proposed access points along WIS 60 from Jackson Drive to Eagle Drive.

B. Executive Summary

The Village of Jackson intends to develop a Tax Increment Finance (TIF) District on an approximately 40-acre property on their eastern village limits. This district would be developed into municipal buildings housing the Village offices and fire/safety services, and a logical mix of multi-family residential, commercial, and office. Access to the development is proposed on WIS 60 at several locations, primarily including a southerly extension of Ridgeway Drive. Other direct driveway access is proposed for future consideration at an office property development and a shopping center. Internal access to this development is being proposed by an extension of Spruce Street to Eagle Drive.

This TIA evaluates the impacts on the following study intersections:

- WIS 60 and Jackson Drive
- WIS 60 and Jackson Family Dentistry Driveway
- WIS 60 and Ridgeway Drive
- WIS 60 and Eagle Drive

1. Land use types, size, buildout, and phasing

The following describes the estimated land use types, development sizes, estimated buildout, and phasing for developments within the TIF District.

Base Year Development (fully Developed in Base year 2020)

- Government Office Building (Jackson Public Safety Building) - 30 employees

Interim Year Development (50% developed by Interim year 2030)

- Low-Rise Multifamily Housing (Apartment Complex) – 166 dwelling units

Horizon Year Development(s) (100% buildout by Horizon year 2035)

- Low-Rise Multifamily Housing (Apartment Complex) – Remaining 166 dwelling units (total of 272 dwelling units)
- Shopping Center – 48,217 square feet
- Shopping Center – 35,859 square feet
- Shopping Center – 31,909 square feet
- Coffee Shop without Drive-Through – 2,000 square feet
- High Turnover Restaurant – 6,000 square feet
- Two Office buildings – 10,000 square feet

2. Proposed Access

The Village of Jackson TIF District includes up to 10 access drives. The following describes the access drives for each development located along WIS 60, Ridgeway Drive and Spruce Street.

- **Jackson Public Safety Building** - One access drive for the Jackson Public Safety Building is proposed to be an exit only access drive on WIS 60. Vehicles utilizing this access will be emergency response vehicles; therefore, this access drive was not evaluated in this TIA. A second access drive is anticipated to be located on Ridgeway Drive for general commuter traffic.
- **Residential Apartment** - Access for the planned apartments is expected to be located on the proposed Spruce Street.

- **Coffee Shop** - The access drive for the proposed coffee shop is platted to share a driveway with the existing Jackson Family Dentistry. This existing driveway currently operates as a full access driveway and was assumed to continue to operate as such with the addition of the coffee shop in this study.
- **Office Building** - On the north side of WIS 60, the proposed two office buildings will share an access drive approximately 540 feet east of Ridgeway Drive. This was evaluated as full access, under the horizon year scenario.
- **Shopping Center 1/High-Turnover Restaurant** - The mixed-use development of Shopping Center 1 and High-Turnover Restaurant will have access on the west side of Ridgeway Drive.
- **Shopping Center 2** – Per WisDOT, two access scenarios were evaluated for the anticipated shopping center located east of the safety building. The first assumes only one full access drive for the development, located on Spruce Street. The second alternative assumes two full access drives: one on WIS 60 and one on Spruce Street. The proposed driveway on WIS 60 is approximately 550 feet from Eagle Drive.
- **Shopping Center 3 & 4**– The two shopping center developments will have access on the south side of Spruce Street.

3. No-Build Operational Deficiencies

To determine how traffic currently operates in the study area, an existing year operational analysis was conducted for the weekday morning, evening and Saturday midday peak hours at the key intersections. The results for base year found that existing deficiencies are present at the following location:

- Northbound and southbound approaches at the intersection of WIS 60 and Eagle Drive. These deficiencies are found during both AM and PM, time periods.

Horizon year 2035 background conditions continue to result in poor LOS at Eagle Drive without improvement. No other key intersection in the study has significant deficiencies with background traffic.

4. Site Generated Traffic

The number of trips the proposed developments within the village TIF District will produce was based on the trip generation rates from the Institute of Transportation Engineers (ITE) *Trip Generation Manual, 10th Edition*. The following summarizes the number of new driveway trips produced under each scenario of buildout for the TIF District.

Base Build Year (2020)

Completion of the Jackson Public Safety Building during the base build year is expected to generate the following driveway trips:

- 270 Daily Trips
- 40 AM Vehicle Trips (30 in and 10 out)
- 25 PM Vehicle Trips (5 in and 20 out)
- 5 Saturday Midday Vehicle Trips (5 in and 0 out)

Interim Build Year (2030)

By year 2030, the following number of new driveway trips is expected to be present due to the developments within the TIF District:

- 1,255 Daily Trips
- 105 AM Vehicle Trips (45 in and 60 out)
- 105 PM Vehicle Trips (55 in and 50 out)
- 100 Saturday Midday Vehicle Trips (55 in and 45 out)

Horizon Build Year (2035)

By year 2035, the following number of new driveway trips is expected to be present due to the developments within the TIF District:

- 8,700 Daily Trips
- 540 AM Vehicle Trips (280 in and 260 out)
- 730 PM Vehicle Trips (365 in and 365 out)
- 865 Saturday Midday Vehicle Trips (460 in and 405 out)

5. Improvement Analysis

The following recommendations for a proposed Village of Jackson TIF District are based on findings of HCM 6 operations analysis for the study area intersections under background and build conditions. Note that improvements are recommended for consideration and are not legally binding.

Base, Interim and Horizon Background Traffic

Though poor operations (LOS F) are currently present at the intersection of WIS 60 and Eagle Drive, the intersection does not meet current year traffic signal warrants. The study recommends consideration that this intersection be replaced with a modern roundabout based on the current and future background traffic operational deficiencies.

Base Build Traffic

WIS 60 and Eagle Drive

Though poor operations (LOS F) are expected to be present under the base build traffic scenario, the results are similar to those found in the base year background scenario.

Therefore, no specific improvements are required (beyond those necessary for background scenarios) under this scenario. Background growth should drive the consideration of a roundabout conversion.

WIS 60 and Ridgeway Drive

The intersection of WIS 60 and Ridgeway drive is proposed to be built into a four-legged intersection in summer 2020 as part of the TIF district initial construction. The additional south leg of the intersection is proposed to be a single lane for all turn movements. Base year build traffic operates acceptably with this proposed design.

Interim Build Traffic

WIS 60 and Eagle Drive

Though poor operations (LOS F) are expected to be present under the interim build traffic scenario, the results are similar to those found in the interim year background scenario. Therefore, no specific improvements are required (beyond those necessary for background scenarios) under this scenario. Background growth should drive the consideration of a roundabout conversion.

WIS 60 and Ridgeway Drive

The addition of interim build site traffic to the intersection of Ridgeway Drive causes northbound traffic to experience LOS D during the morning and evening peaks. To mitigate this poor traffic condition, changes in traffic control to either a traffic signal or roundabout would be necessary. Signal warrants however are not met at this intersection with interim build traffic and therefore the movements experiencing LOS D may need to be temporarily tolerated until a signal warrant is met.

Horizon Build Traffic Alternatives 1 and 2

WIS 60 and Eagle Drive

Poor operations at the intersection under both horizon build traffic alternative scenarios are worse than those found in the horizon background scenario. Under this scenario, improvements are necessary to provide safe and efficient passage for all motorists traveling through the intersection. To mitigate this condition, changes in traffic control to either a traffic signal or roundabout would be appropriate. Signal warrants are met at this intersection with horizon build traffic under both alternatives. It is recommended that either a traffic signal or modern roundabout be implemented for the horizon year scenario (if a signal or roundabout are not already implemented at a prior date). A traffic signal with permissive phasing or single lane roundabout is adequate for improving operations.

WIS 60 and Ridgeway Drive

Poor operations present at the intersection WIS 60 and Ridgeway Drive under both horizon build alternatives continue to degrade from the horizon background scenario. To mitigate this condition, changes in traffic control to either a traffic signal or roundabout would be appropriate. Signal warrants are met at this intersection with horizon build traffic under both alternatives. It is recommended that either a traffic signal or modern roundabout be implemented for the horizon year scenario (if a signal or roundabout are not already implemented at a prior date). A traffic signal with permissive phasing or single lane roundabout is adequate for improving operations. To maintain safety on the WIS 60, 150 feet left turn lanes on the mainline should be considered in addition to a traffic signal.

6. Conclusion

Full build out of the Village of Jackson TIF District under Horizon Year Build conditions (both Alternative 1 and 2) is expected to result in poor LOS at Ridgeway Drive and Eagle Drive starting in the base year for Eagle Drive and in the Interim Year for Jackson Drive. Signal warrants are not met for either intersection until the Horizon Year (2035) and therefore either less-than-desirable LOS will need to be tolerated for some time or consideration of modern roundabouts in the interim.

Implementation of the following improvements are recommended to mitigate poor LOS conditions:

- Install modern roundabout or traffic signals at WIS 60 and Eagle Drive within five years. Signal warrants are not met until year 2035, but this location could benefit from active control sooner than 2035 because it will be used as a pedestrian crossing location for the grocery store. A roundabout should be a consideration for installation within the next five years.
- Install roundabout or traffic signals at WIS 60 and Ridgeway Drive by year 2035. If signals are installed, construct EB and WB left turn lanes and separate the NB movement into one shared left turn/through lane and one right turn lane.

C. Chapter 1 Exhibits

Exhibit 1-1 : Site Plan
Exhibit 1-2: Base Year Background Traffic Recommended Improvements
Exhibit 1-3: Base Year build Traffic Recommended Improvements
Exhibit 1-5: Interim Year Background Traffic Recommended Improvements
Exhibit 1-6: Interim Year Build Traffic Recommended Improvements
Exhibit 1-7: Horizon year Background Traffic Recommended Improvements
Exhibit 1-8: Horizon Year Build Traffic Recommended Improvements

M:\Projects\13000\13292\TraffStudy\Figures

SRF Consulting Group, Inc.

Site Plan

Jackson TIF District TIA

Village of Jackson, WI

Exhibit 1-1

13292
May 2020

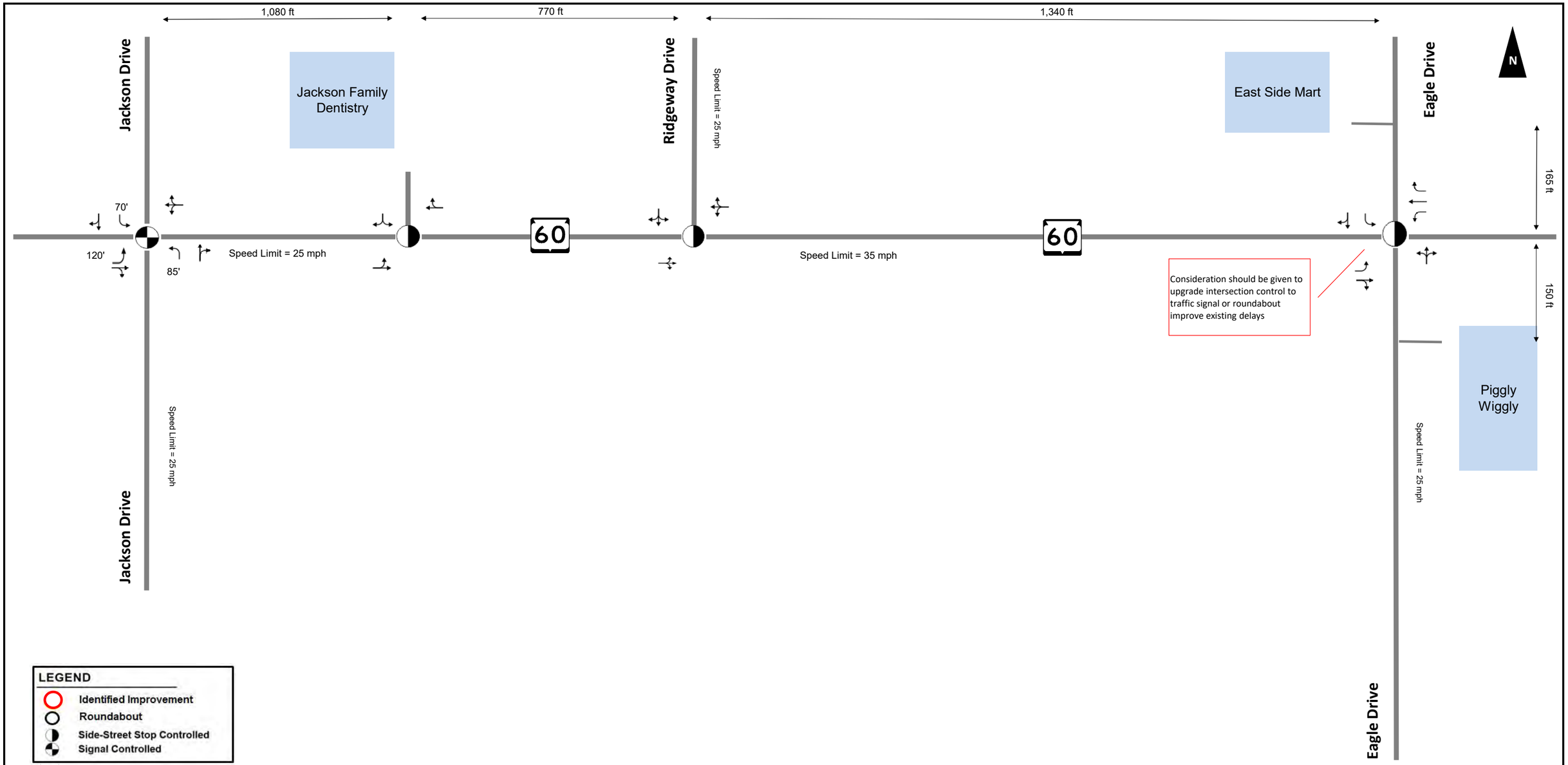

Base Year Background Traffic Recommended Improvements

Exhibit 1-2

Jackson TIF District TIA
Village of Jackson, WI

May 2020

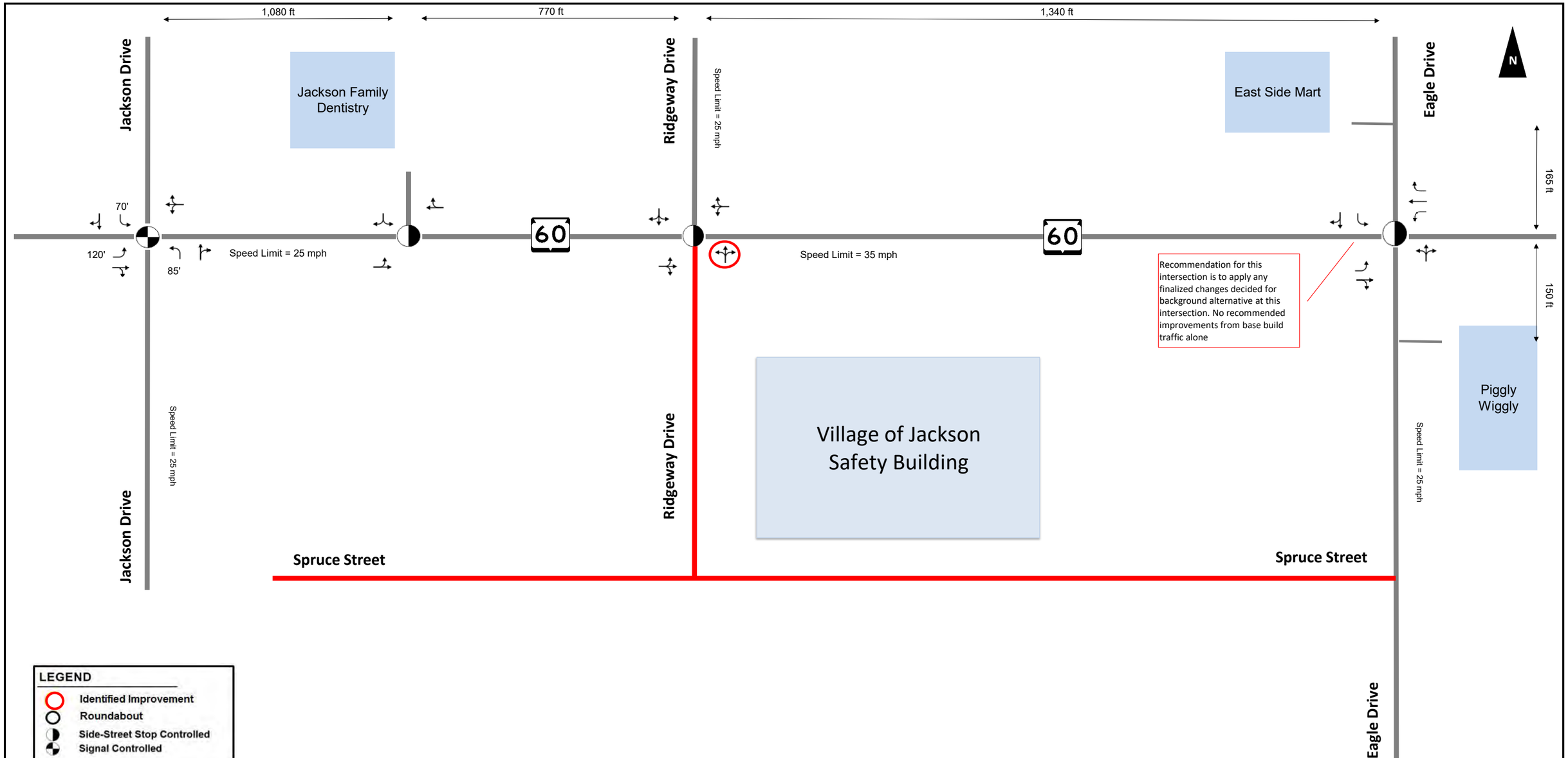

Base Year Build Traffic Recommended Improvements

Jackson TIF District TIA

Village of Jackson, WI

May 2020

Exhibit 1-3

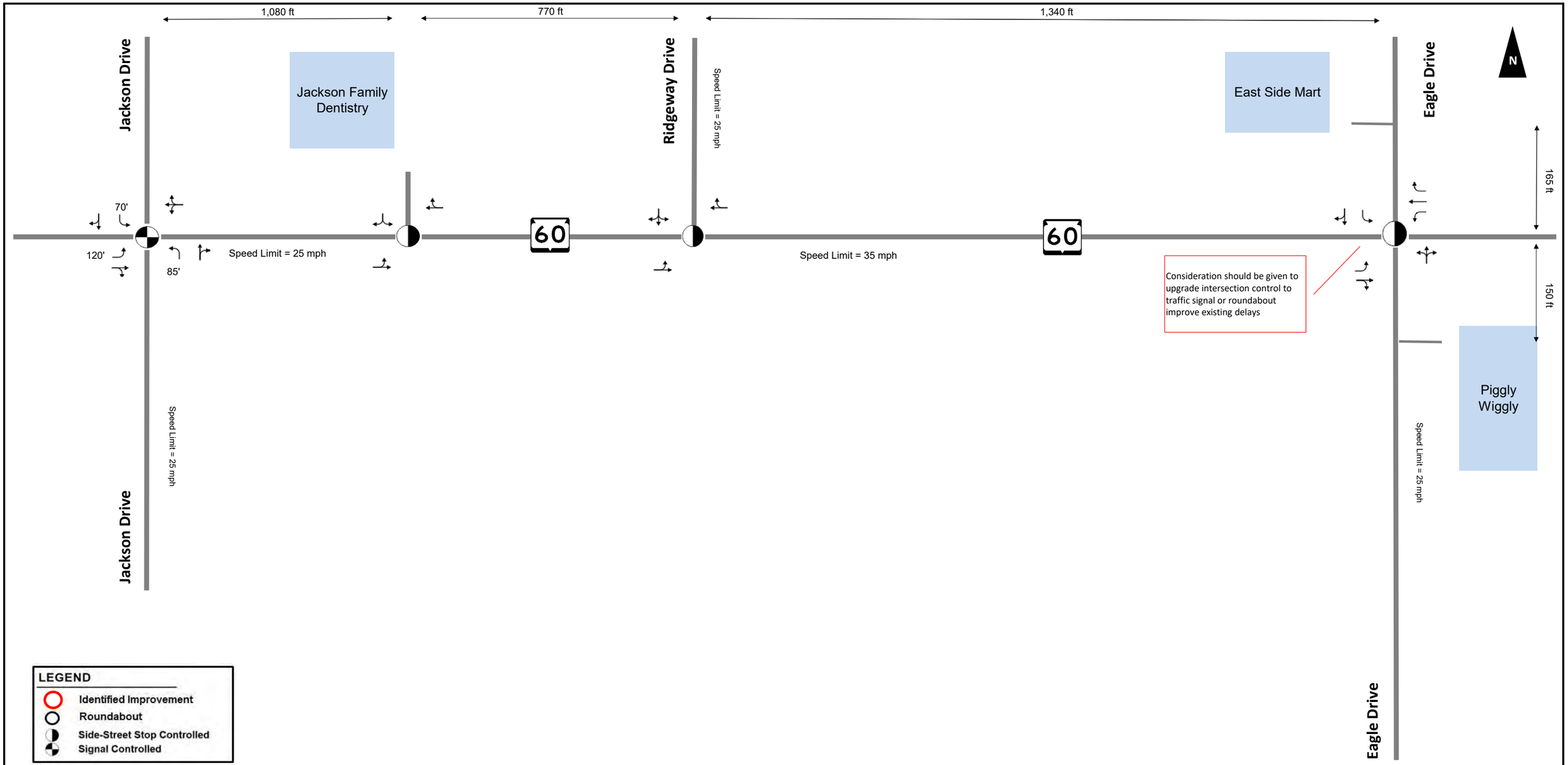

Interim Year Background Traffic Recommended Improvements

Jackson TIF District TIA

Village of Jackson, WI

May 2020

Exhibit 1-5

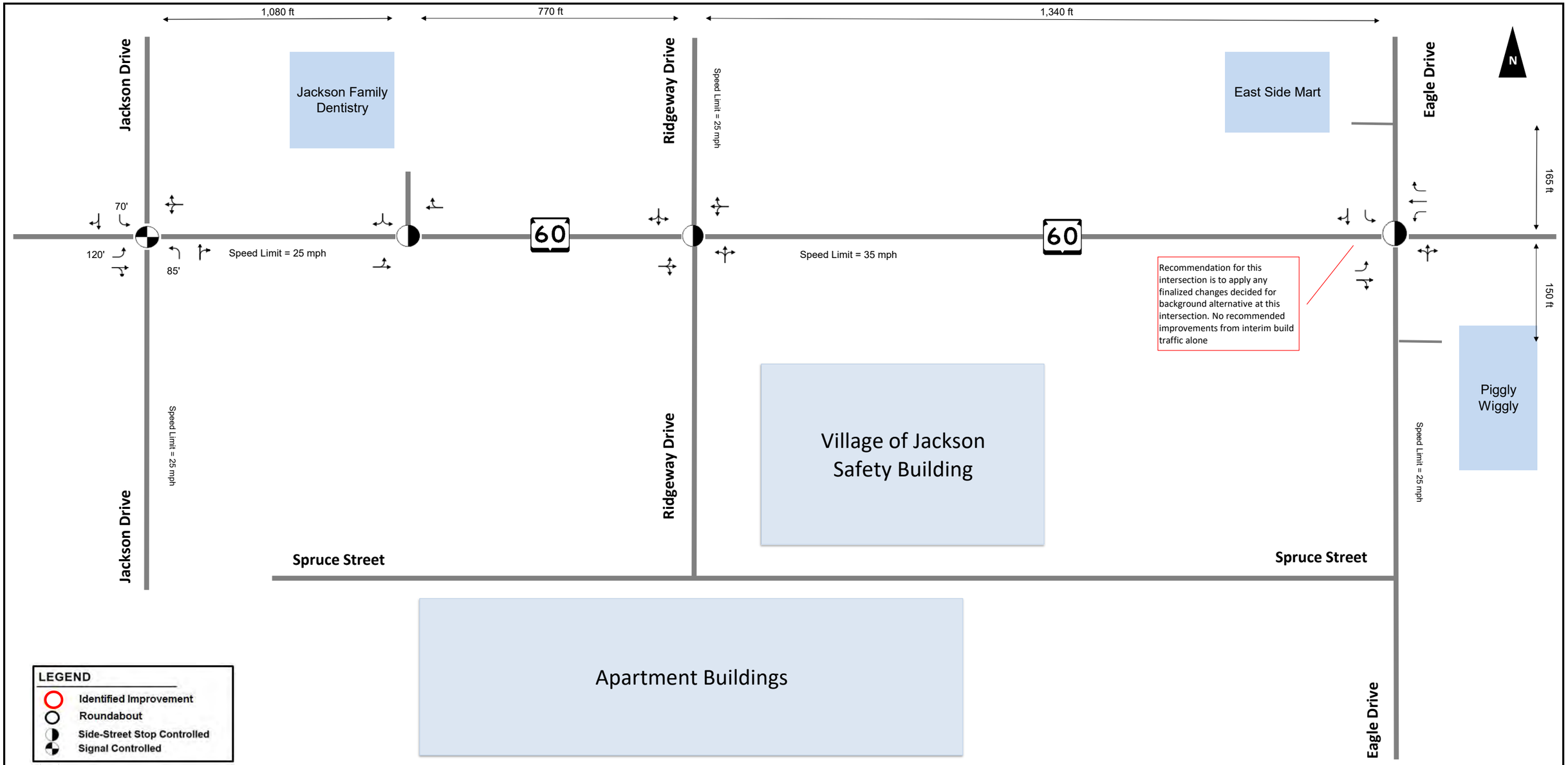

Interim Year Build Traffic Recommended Improvements

Jackson TIF District TIA

Village of Jackson, WI

May 2020

Exhibit 1-6

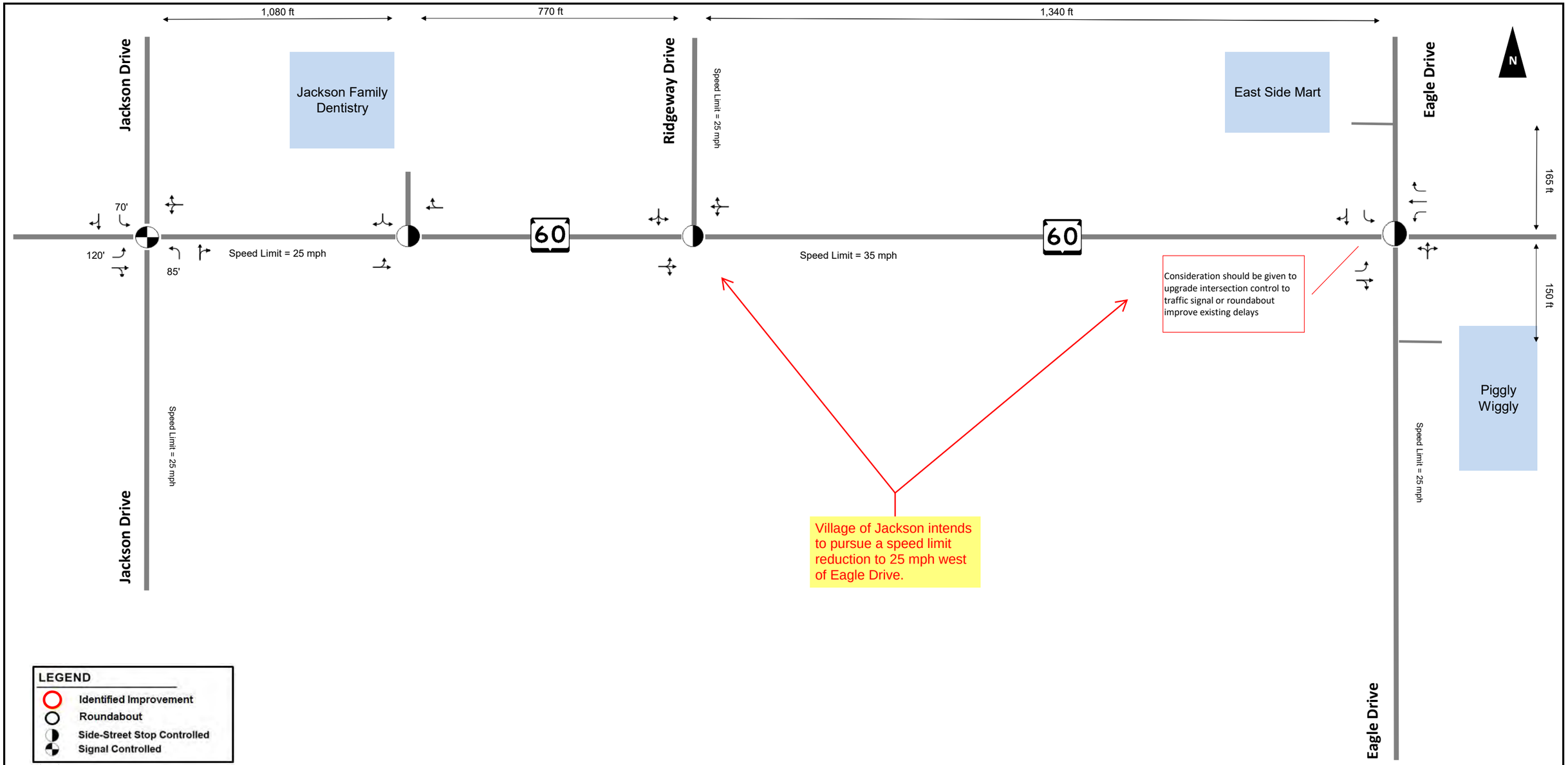

SRF Consulting Group, Inc.

May 2020

Horizon Year Background Traffic Recommended Improvements

Jackson TIF District TIA

Village of Jackson, WI

Exhibit 1-8

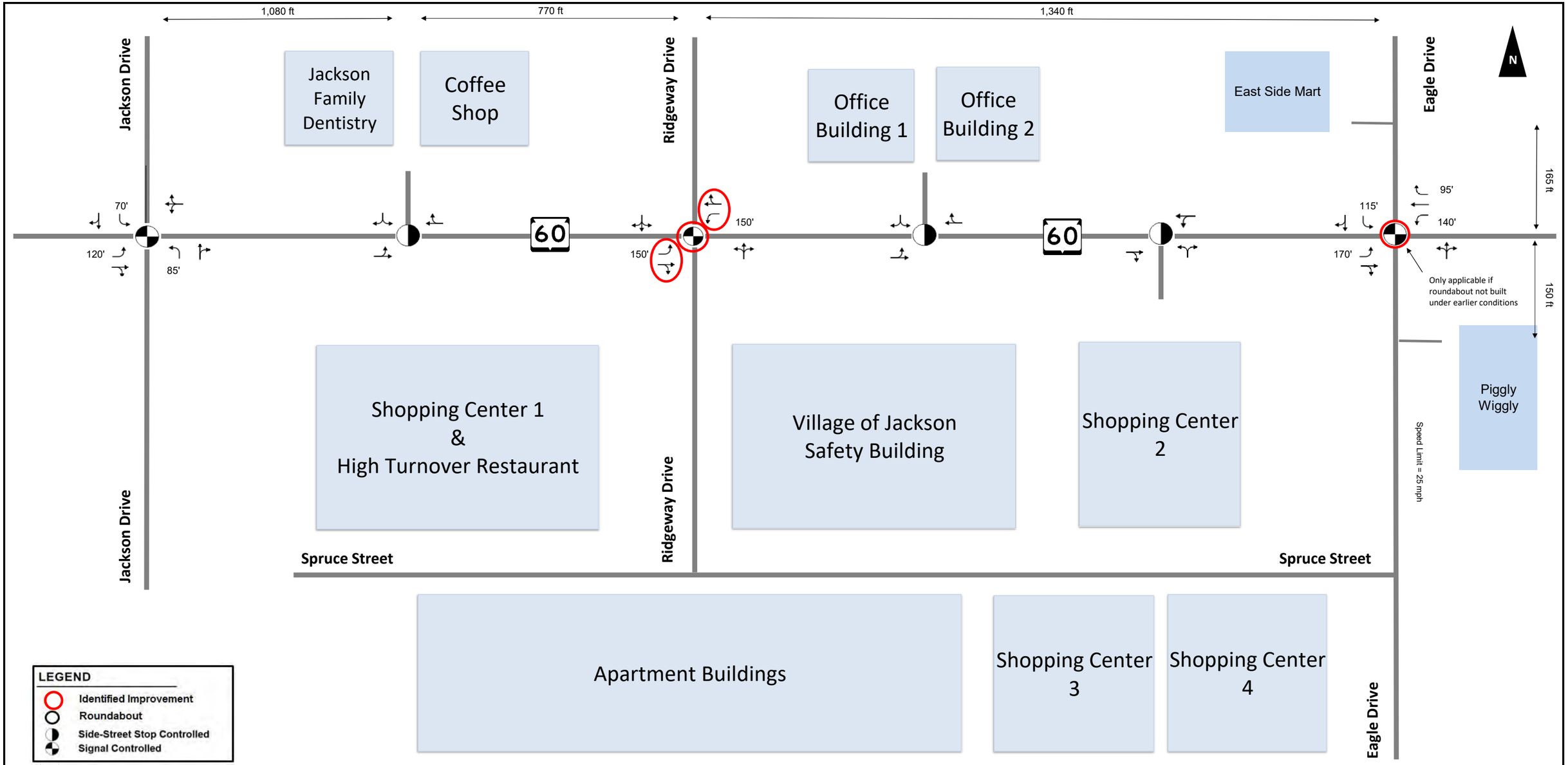

SRF Consulting Group, Inc.

May 2020

Horizon Year Build Traffic Recommended Improvements

Jackson TIF District TIA

Village of Jackson, WI

Exhibit 1-9

Chapter 2 Proposed Development

A. On-Site Development

1. Development Descriptions and Site Location

The proposed TIF District in the Village of Jackson is anticipated to be comprised of the following land uses: government, residential, and commercial. Seven development sites are present within the TIF district with varying land use types and sizes. The overall TIF District is centered around WIS 60 and is bound by Jackson Drive to the west and Eagle Drive to the east. **Exhibit 2-1** depicts the extents and overall location of the TIF District.

2. Land use and Intensity

The following describes the estimated land use types, development sizes and estimated buildout for developments within the TIF District.

Base Year Development(s)

- Government Office Building (Jackson Public Safety Building) - 30 employees

Interim Year Development(s)

- Low-Rise Multifamily Housing (Apartment Complex) – 166 dwelling units

Horizon Year Development(s)

- Low-Rise Multifamily Housing (Apartment Complex) – Remaining 166 dwelling units (total of 272 dwelling units)
- Shopping Center – 48,217 square feet
- Shopping Center – 35,859 square feet
- Shopping Center – 31,909 square feet
- Coffee Shop without Drive-Through – 2,000 square feet
- High Turnover Restaurant – 6,000 square feet
- Two Office buildings – 10,000 square feet

3. Proposed Site Plan

Exhibit 2-2 depicts the site plan for the Village of Jackson TIF District. Detailed plans, as can be seen on the exhibit, are available for the Jackson Public Safety Building as well as the anticipated office buildings. All other site locations are still under early planning phases.

4. Development Phasing and Timing

The Village of Jackson TIF District is anticipated to develop over the course of the next 15 years. The following describes the approximate phasing of the developments within the TIF District:

Year 2020

- Jackson Public Safety Building

Year 2025

- 50% Build-out of Apartment Complex

Year 2030

- Full Build-out of Apartment Complex
- Shopping Centers 1, 2, 3, and 4
- High-Turnover Restaurant
- Coffee Shop
- Office Buildings

Exhibit 2-3 visually depicts the development phasing described above.

B. Study Area

1. Influence Area

The Village of Jackson TIF District is located east of US 45, on WIS 60 toward the east end of the village boundaries. Traffic traveling within the TIF District boundaries includes commuter traffic from US 45 to Grafton/Cedarburg area as well as local traffic via Eagle Drive, Ridgeway Drive and Jackson Drive.

2. Area of Significant Traffic Impact

This TIA evaluates the impacts on the following study intersections:

- WIS 60 and Jackson Drive
- WIS 60 and Jackson Family Dentistry Driveway
- WIS 60 and Ridgeway Drive
- WIS 60 and Eagle Drive

The study will also review traffic conditions at the development access drives along WIS 60 including access to the office buildings north of WIS 60 and one of the shopping centers. The WIS 60 and shopping center access drive will be evaluated with two access scenarios as follows:

- Alternative 1: No access at WIS 60; full access at Spruce Street
- Alternative 2: Full access on WIS 60; full access at Spruce Street

C. Off-Site Land Use and Development

The Village of Jackson was not aware of any off-site developments that could affect traffic volumes within the study area, at this time.

D. Site Accessibility

Descriptions of major area roadways within the study area are summarized below. **Exhibit 2-4** shows the existing and proposed land uses of the surrounding area, as denoted in the Village of Jackson Comprehensive Plan.

1. WIS 60 / Main Street

WIS 60 is an east-west, minor arterial roadway that serves as a primary east-west route through the Village of Jackson. Within the study area, WIS 60 provides two undivided travel lanes and has a speed limit of 35 mph. Currently, there is sidewalk present along the length of the study area on the north side of the WIS 60, and sidewalk present between Jackson Drive and Schmidt Funeral Home on the south side. A section of WIS 60 is scheduled to be repaved in the summer of 2020 from the village limits to the east and another section is scheduled to be repaved from Eagle Drive to CTH P in the year 2024.

2. Jackson Drive

Jackson Drive is a north-south local two-lane roadway with a speed limit of 25 mph. Jackson Drive runs from Sherman Road to County Highway G. At its intersection with WIS 60, Jackson Drive is signalized. Sidewalks are present on both sides of Jackson Drive and on-street parking is restricted along the corridor.

3. Ridgeway Drive

Ridgeway Drive is a north-south local two-lane roadway with a speed limit of 25 mph. Ridgeway Drive runs from WIS 60 to Highland Road. At its T-intersection with WIS 60, Ridgeway Drive is stop controlled. With residential land use surrounding Ridgeway Drive, sidewalks are present and on-street parking is permitted on both sides of the street.

With the anticipation of the new Jackson Public Safety Building, an extension of Ridgeway Drive is anticipated to occur in the summer of 2020. This new section of roadway will be two-lanes and connect WIS 60 to an extension of Spruce Street. Sidewalks will be present on both sides of the roadway

4. Eagle Drive

Eagle Drive is a north-south local two-lane roadway with a speed limit of 25 mph. Eagle Drive runs from Hickory Lane to Stonewall Drive. At its intersection with WIS 60, Eagle Drive is stop controlled. Sidewalks are present and on-street parking is permitted along Eagle Drive to the north of WIS 60 where the roadway leads toward residential and educational land uses. South of WIS 60, towards mixed land use of commercial and residential properties, Eagle Drive restricts on-street parking and does not have sidewalks. On street parking is permitted north of WIS 60 but restricted south of WIS 60.

5. Spruce Street

Spruce Street is currently a 600-foot residential roadway that runs parallel to WIS 60. With the anticipation of the TIF District, this roadway is planned to be extended from its current termini to Eagle Drive during the summer of 2020. It will also form a T-intersection with Ridgeway Drive. Designs plans show Spruce Street is anticipated to be a two-lane local roadway with sidewalks present on both sides of the road.

E. Chapter 2 Exhibits

Exhibit 2-1: Site Location Map
Exhibit 2-2: Site Plan
Exhibit 2-3: Development Staging Detail
Exhibit 2-4: Existing and Proposed Land Use for Study Area

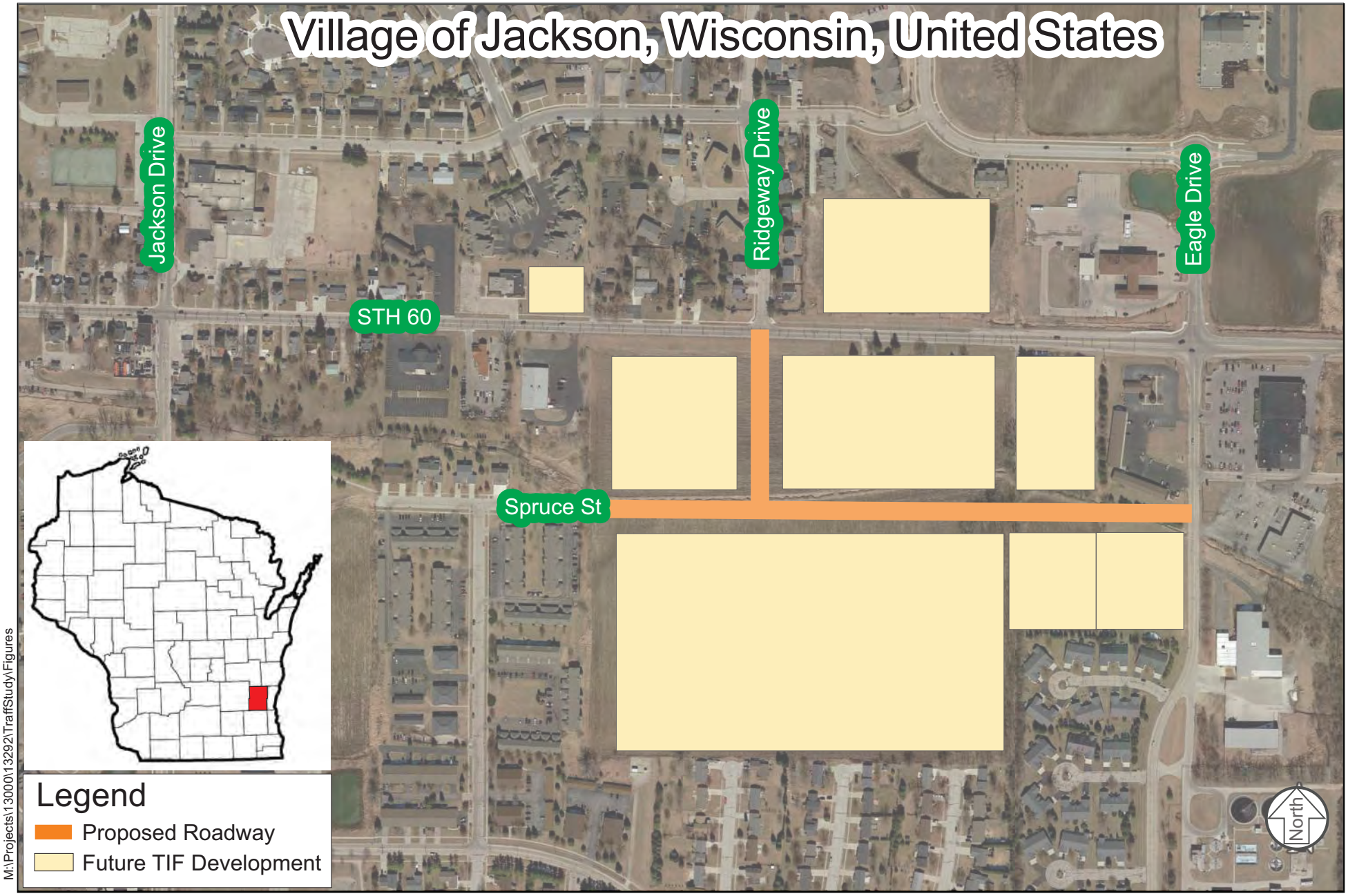

M:\Projects\13000\13292\TraffStudy\Figures

SRF Consulting Group, Inc.

Site Location Map

Jackson TIF District TIA

Village of Jackson, WI

13292
May 2020

Exhibit 2-1

M:\Projects\13000\13292\TraffStudy\Figures

SRF Consulting Group, Inc.

Site Plan

Jackson TIF District TIA

Village of Jackson, WI

13292
May 2020

Exhibit 2-2

M:\Projects\13000\13292\TraffStudy\Figures

SRF Consulting Group, Inc.

Development Staging Plan

Jackson TIF District TIA

Village of Jackson, WI

Exhibit 2-3

13292
May 2020

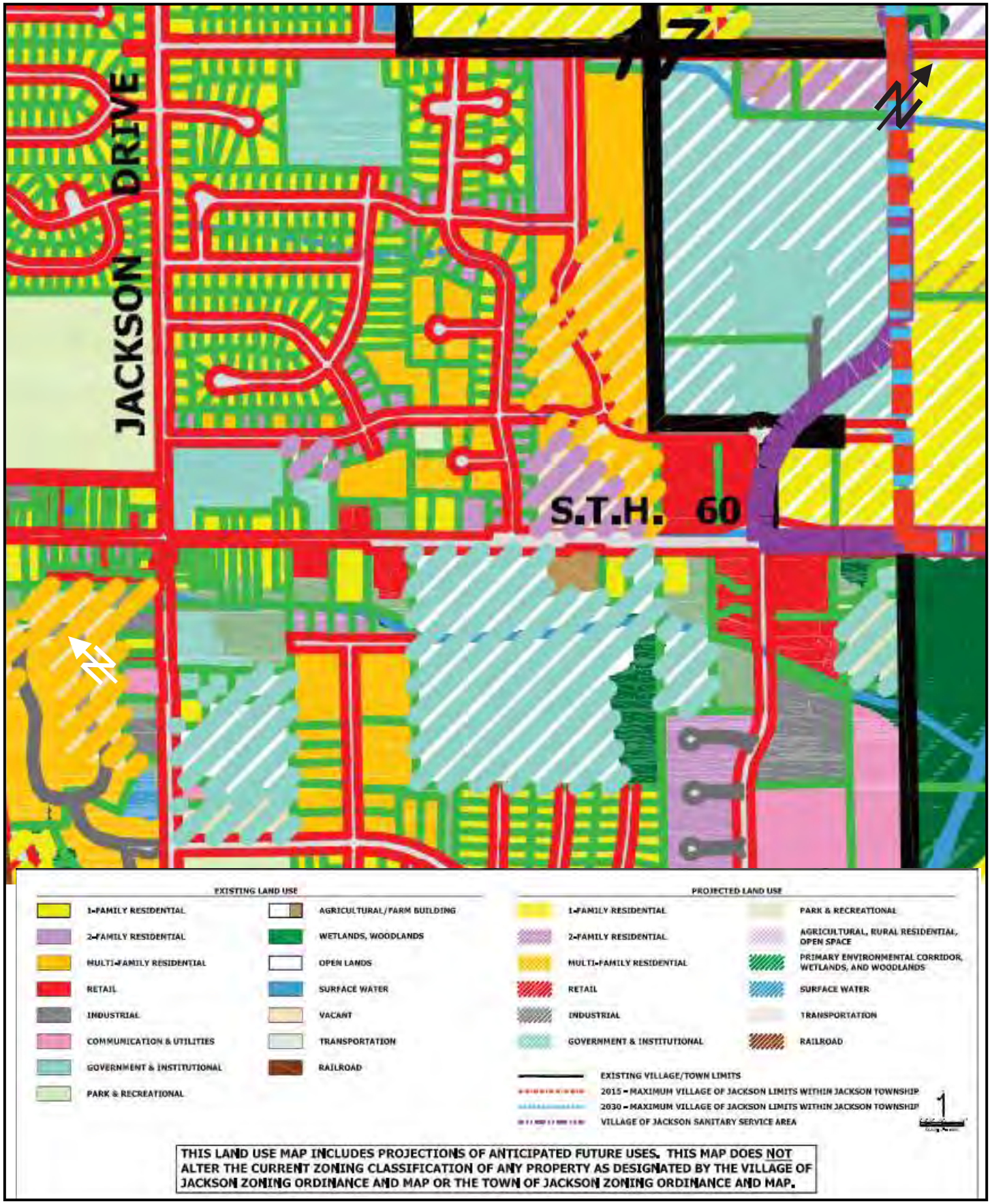

SRF Consulting Group, Inc.

2035 Existing and Proposed Land Use Map*

Exhibit 2-4

Jackson TIF District TIA

Village of Jackson, WI

13292
May 2020

*Information directly out of the Village of Jackson Comprehensive Plan

Chapter 3 Analysis of Existing Conditions

A. Physical Characteristics

Existing roadway and intersection characteristics including but not limited to speed limits, intersection geometry, and driveway locations within the study area are illustrated in **Exhibit 3-1A**.

B. Traffic Volumes

1. Existing Traffic Volumes

Weekday morning (6:00 to 9:00 a.m.), weekday afternoon (3:00 to 6:00 p.m.), and Saturday midday (11:00 am to 2:00 pm) peak hour turning movement counts were collected in February 2020 at most of the study intersections to understand existing traffic operations and to provide a baseline for future-year traffic volume forecasts. The intersection of WIS 60 and Jackson Drive was collected in October of 2017 as part of another study and was provided to SRF for use in this study. The collected turning movement counts are provided in **Appendix A**.

The following lists the study area intersections and the intersection count dates used for this TIA. The counted peak hour traffic volumes can be seen in **Exhibit 3-2A**.

- WIS 60 and Jackson Drive: Wednesday, October 18, 2017 and Saturday, February 22, 2020
- WIS 60 and Ridgeway Drive: Wednesday, February 12, 2020 and Saturday, February 22, 2020
- WIS 60 and Eagle Drive: Wednesday, February 12, 2020 and Saturday, February 22, 2020

2. Base Year Background Traffic Volumes

The initial build year, also known as the base year, for the Village of Jackson TIF District is year 2020. Because of the varying years of data collection, volume balancing was necessary between intersections. These balanced volumes were used as the base year traffic volumes and can be seen in **Exhibit 3-2B**.

C. Capacity/Level of Service

To determine how traffic operates under current and future conditions, an operational analysis was conducted for intersections identified in Chapter 2 using methodologies published in the *Highway Capacity Manual* (HCM). The HCM 6 module in the traffic operations software package, Synchro, was used to document the results of the traffic operations analysis.

Operational analysis results identify a Level of Service (LOS), which is intended to depict the quality of traffic flow through an intersection. Intersections and intersection lane groups are given a ranking from LOS A through LOS F as a function of the average control delay they endure. Delay is the amount of time a vehicle waits to travel through an intersection and is measured in seconds per vehicle.

For the intersection operations analysis, all key intersections in the study area were evaluated to determine which locations *overall* may not operate at LOS C or better, per WisDOT TIA guidelines. In addition, a more detailed analysis of the intersections was conducted to identify and address *turning movements* or *lane groups* that are operating at LOS D, E, or F. It is important to note that some intersections may currently, or are projected to, have turning movements or lane groups that operate at LOS D, E or F. However, these movements may have relatively low volumes (less than 50 vehicles per hour) and cost-effective improvements may not exist to improve their LOS.

In addition, increases in background growth or site-generated traffic may lead to small increases in vehicle delay, triggering a change in the level of service range from LOS C to D or LOS D to LOS E. The actual increase in delay may only be a few seconds, which would be insignificant in terms of driver perception. In those cases, mitigating improvements may not be necessary.

To determine how traffic currently operates in the study area, an existing year operational analysis was conducted for the weekday morning, evening and Saturday midday peak hours at the key intersections. The existing year operational analysis was based on the intersection geometry illustrated in **Exhibit 3-1A** and the peak hour traffic volumes shown in **Exhibit 3-2B**. The peak hour traffic volumes shown in **Exhibit 3-2B** were also used for base year operational analysis.

Level of service (seconds of delay), and volume-to-capacity (v/c) ratios results for each lane group at the analyzed intersections were developed for each peak traffic period. The results for base year, shown in **Exhibit 3-3**, found that existing deficiencies are present at the following location:

- Northbound and southbound approaches at the intersection of WIS 60 and Eagle Drive. These deficiencies are found during both AM and PM, time periods.

The traffic operations output files are in the **Appendix B.**

D. Sources of Data

The following lists the traffic data sources and information collected for this TIA:

- Intersection Turning Movement Counts collected by SRF Consulting &/or provided by WisDOT
- Average Daily Traffic from WisDOT TCMap Portal
- Traffic forecasts provided by WisDOT Traffic Forecasting Section
- Existing Signal Timing and plans for WIS 60 and Jackson Drive
- WIS 60 Crash Data provided by TOPS Lab
- Existing Geometry collected by SRF Consulting via field inspection Google Earth Aerials and Google Street View

E. Chapter 3 Exhibits

Exhibit 3-1A: Existing Transportation System
Exhibit 2-2A: Existing Traffic volumes
Exhibit 3-2B: Base Year Background Traffic Volumes
Exhibit 3-3: Base Year Background Traffic Capacity/LOS Analysis

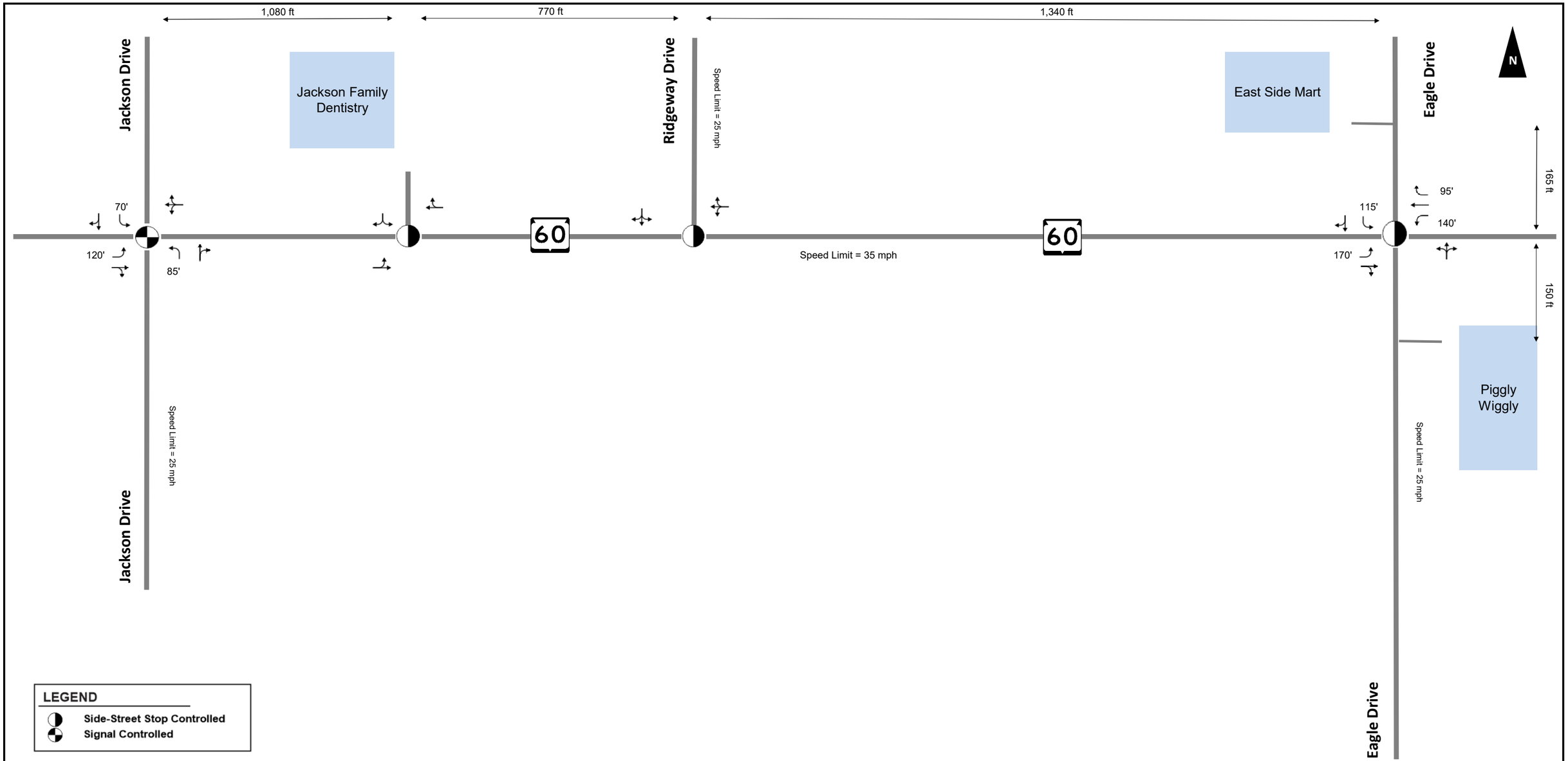

Existing Transportation System

Jackson TIF District TIA

Village of Jackson, WI

May 2020

Exhibit 3-1A

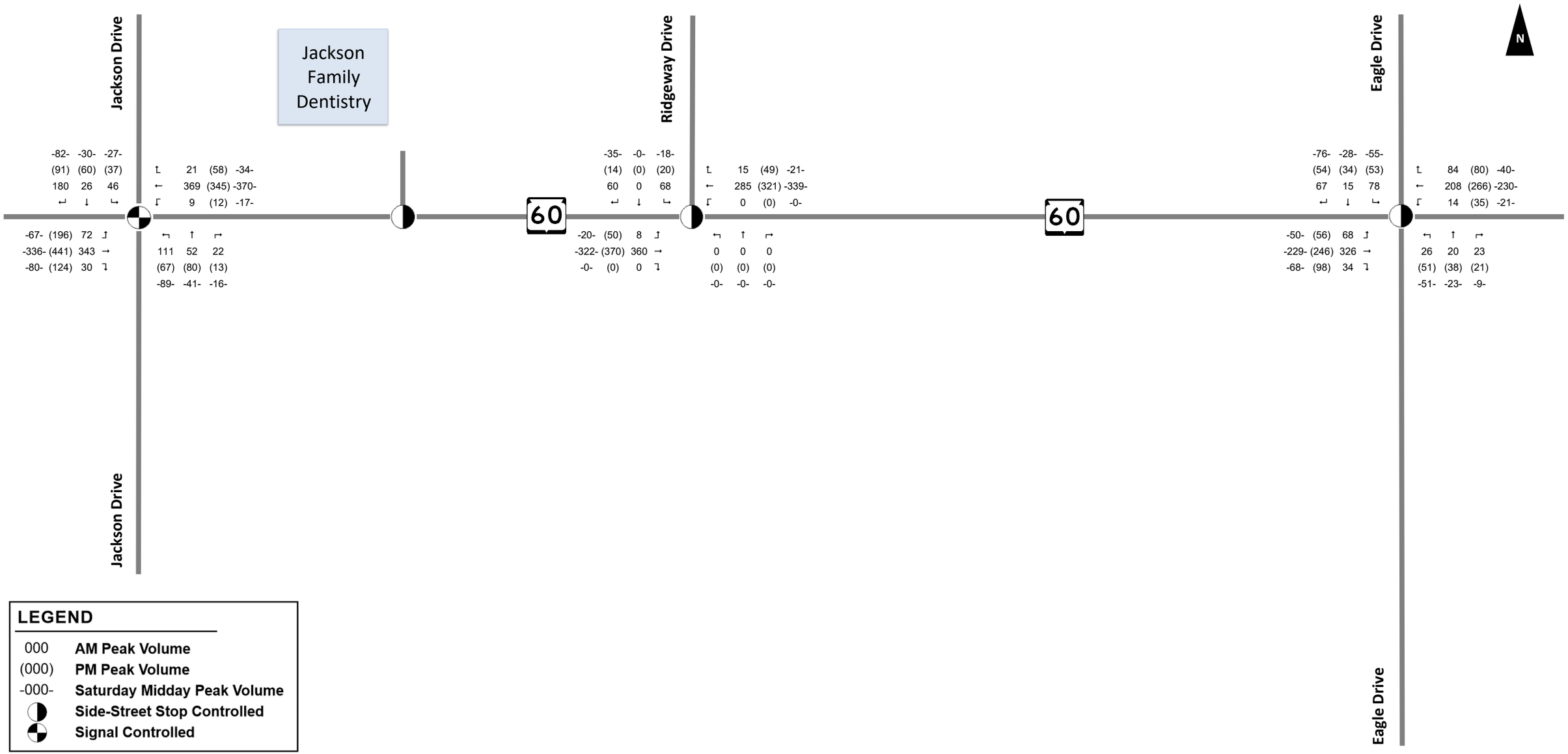

SRF Consulting Group, Inc.

May 2020

Existing Year (2020) Traffic Volumes

Jackson TIF District TIA

Village of Jackson, WI

Exhibit 3-2A

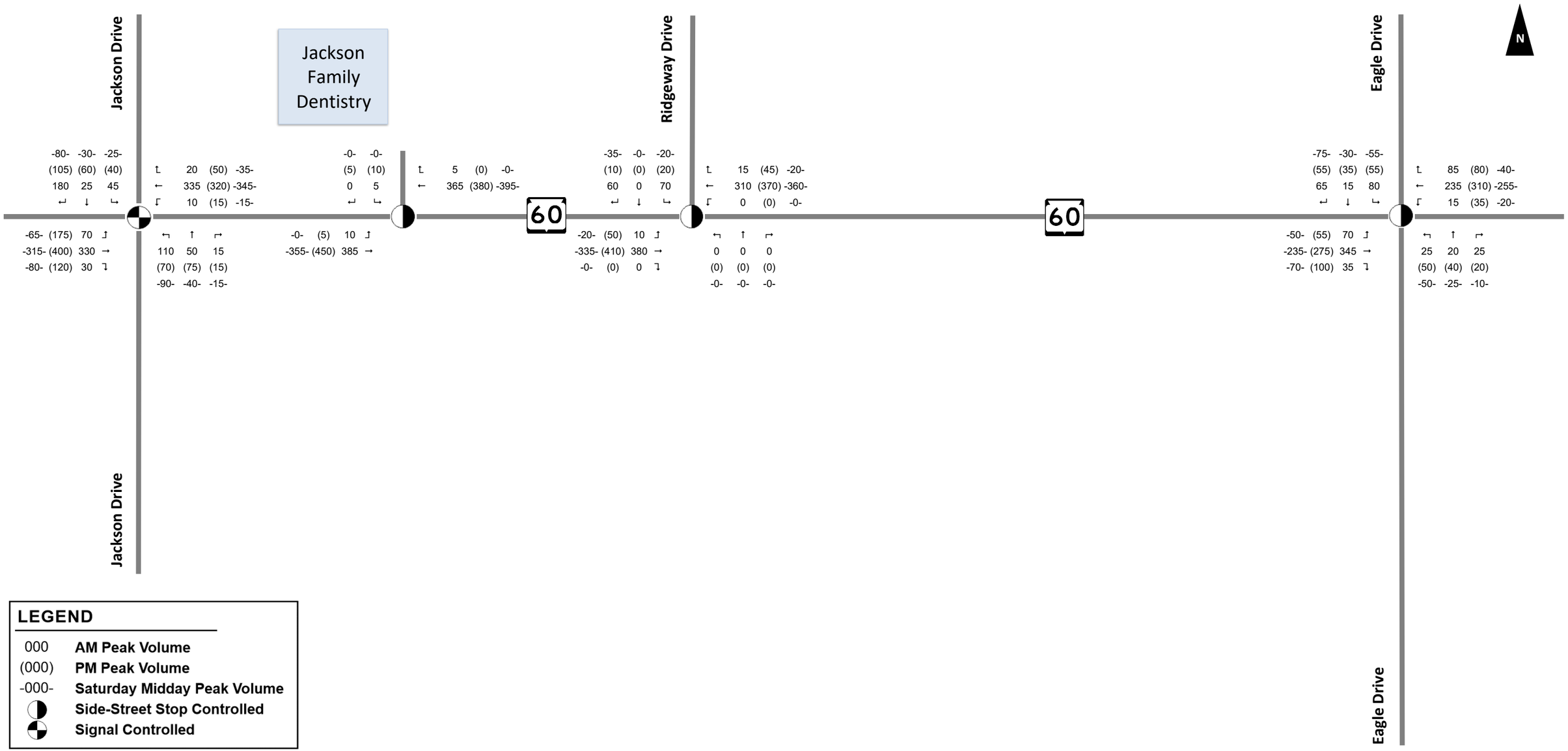

SRF Consulting Group, Inc.

May 2020

Base Year (2020) Background Traffic Volumes

Jackson TIF District TIA

Village of Jackson, WI

Exhibit 3-2B

Weekday Morning Peak - Existing Conditions

Intersection	Overall		By Approach	Eastbound			Westbound			Northbound			Southbound		
	Delay (s)	LOS		EBL	EBT	EBR	WBL	WBT	WBR	NBL	NBT	NBR	SBL	SBT	SBR
1: Jackson Dr & WIS-60	15.7	B	Lane Configuration	1	1>	0	0	<1>	0	1	1>	0	1	1>	0
			Volume	70	330	30	10	335	20	110	50	20	45	25	180
			Delay (s)	9.5	0.0	9.4	19.2	0.0	0.0	23.3	0.0	15.7	17.0	0.0	18.0
			LOS	A	A	A	B	A	A	C	A	B	B	A	B
2: WIS-60 & Dentist/Coffee Shop Driveway	0.2	A	Lane Configuration	0	1	-	-	1	0	-	-	-	1>	-	0
			Volume	10	385	-	-	365	5	-	-	-	5	-	0
			Delay (s)	8.2	-	-	-	-	-	-	-	-	16.1	-	-
			LOS	A	-	-	-	-	-	-	-	-	C	-	-
3: WIS-60 & Ridgeway Dr	2.9	A	Lane Configuration	0	<1	-	-	1>	0	-	-	-	1>	-	0
			Volume	10	380	-	-	310	15	-	-	-	70	-	60
			Delay (s)	8.1	0.0	-	-	-	-	-	-	-	18.1	-	-
			LOS	A	A	-	-	-	-	-	-	-	C	-	-
6: Eagle Dr & WIS-60	6.8	A	Lane Configuration	1	1>	0	1	1	1	0	<1>	0	1	1>	0
			Volume	70	345	35	15	235	85	25	20	25	80	15	65
			Delay (s)	8.4	-	-	8.3	-	-	-	27.0	-	40.2	13.2	-
			LOS	A	-	-	A	-	-	-	D	-	E	B	-

Weekday Evening Peak - Existing Conditions

Intersection	Overall		By Approach	Eastbound			Westbound			Northbound			Southbound		
	Delay (s)	LOS		EBL	EBT	EBR	WBL	WBT	WBR	NBL	NBT	NBR	SBL	SBT	SBR
1: Jackson Dr & WIS-60	14.5	B	Lane Configuration	1	1>	0	0	<1>	0	1	1>	0	1	1>	0
			Volume	175	400	120	15	320	50	70	75	15	40	60	105
			Delay (s)	8.4	0.0	9.2	18.7	0.0	0.0	23.9	0.0	18.4	20.2	0.0	20.0
			LOS	A	A	A	B	A	A	C	A	B	C	A	C
2: WIS-60 & Dentist/Coffee Shop Driveway	0.3	A	Lane Configuration	0	1	-	-	1	0	-	-	-	1>	-	0
			Volume	5	450	-	-	380	0	-	-	-	10	-	5
			Delay (s)	8.2	-	-	-	-	-	-	-	-	15.3	-	-
			LOS	A	-	-	-	-	-	-	-	-	C	-	-
3: WIS-60 & Ridgeway Dr	1.1	A	Lane Configuration	0	<1	-	-	1>	0	-	-	-	1>	-	0
			Volume	50	410	-	-	370	45	-	-	-	20	-	10
			Delay (s)	8.5	0.0	-	-	-	-	-	-	-	18.6	-	-
			LOS	A	A	-	-	-	-	-	-	-	C	-	-
6: Eagle Dr & WIS-60	11.2	B	Lane Configuration	1	1>	0	1	1	1	0	<1>	0	1	1>	0
			Volume	55	275	100	35	310	80	50	40	20	55	35	55
			Delay (s)	8.5	-	-	8.4	-	-	-	67.6	-	45.7	19.6	-
			LOS	A	-	-	A	-	-	-	F	-	E	C	-

Saturday Midday Peak - Existing Conditions

Intersection	Overall		By Approach	Eastbound			Westbound			Northbound			Southbound		
	Delay (s)	LOS		EBL	EBT	EBR	WBL	WBT	WBR	NBL	NBT	NBR	SBL	SBT	SBR
1: Jackson Dr & WIS-60	12.6	B	Lane Configuration	1	1>	0	0	<1>	0	1	1>	0	1	1>	0
			Volume	65	315	80	15	345	35	90	40	15	25	30	80
			Delay (s)	7.3	0.0	6.9	15.4	0.0	0.0	19.8	0.0	16.2	17.1	0.0	17.2
			LOS	A	A	A	B	A	A	B	A	B	B	A	B
2: WIS-60 & Dentist/Coffee Shop Driveway	0.0	A	Lane Configuration	0	1	-	-	1	0	-	-	-	1>	-	0
			Volume	0	355	-	-	395	0	-	-	-	0	-	0
			Delay (s)	-	-	-	-	-	-	-	-	-	0.0	-	-
			LOS	-	-	-	-	-	-	-	-	-	A	-	-
3: WIS-60 & Ridgeway Dr	1.1	A	Lane Configuration	0	<1	-	-	1>	0	-	-	-	1>	-	0
			Volume	20	335	-	-	360	20	-	-	-	20	-	35
			Delay (s)	8.2	0.0	-	-	-	-	-	-	-	13.2	-	-
			LOS	A	A	-	-	-	-	-	-	-	B	-	-
6: Eagle Dr & WIS-60	5.6	A	Lane Configuration	1	1>	0	1	1	1	0	<1>	0	1	1>	0
			Volume	50	235	70	20	255	40	50	25	10	55	30	75
			Delay (s)	8.0	-	-	8.0	-	-	-	24.1	-	20.5	13.4	-
			LOS	A	-	-	A	-	-	-	C	-	C	B	-

Chapter 4 Projected Traffic

A. Background Traffic Forecasting

Collected intersection turning movement counts at the study intersections were projected to interim and horizon year, Year 2030 and 2035 respectively, by WisDOT Traffic Forecasting Section (TFS) at the study intersections. These forecasts were rounded and then balanced per WisDOT SE Region's protocols and are shown in **Exhibit 4-1 and 4-2** for interim and horizon years, respectively. The provided WisDOT traffic forecasts can be found in **Appendix A**.

B. On-Site and Off-Site Development Traffic Forecasting

1. Trip Generation

The number of trips the proposed developments within the village TIF District will produce was based on the trip generation rates from the Institute of Transportation Engineers (ITE) *Trip Generation Manual, 10th Edition*. The following summarizes the number of new driveway trips produced under each scenario of buildout for the TIF District.

Base Build Year (2020)

Completion of the Jackson Public Safety Building during the base build year is expected to generate the following driveway trips:

- 270 Daily Trips
- 40 AM Vehicle Trips (30 in and 10 out)
- 25 PM Vehicle Trips (5 in and 20 out)
- 5 Saturday Midday Vehicle Trips (5 in and 0 out)

Interim Build Year (2030)

By year 2030, the following number of new driveway trips is expected to be present due to the developments within the TIF District:

- 1,255 Daily Trips
- 105 AM Vehicle Trips (45 in and 60 out)
- 105 PM Vehicle Trips (55 in and 50 out)
- 100 Saturday Midday Vehicle Trips (55 in and 45 out)

Horizon Build Year (2035)

By year 2035, the following number of new driveway trips is expected to be present due to the developments within the TIF District:

- 8,700 Daily Trips
- 540 AM Vehicle Trips (280 in and 260 out)
- 730 PM Vehicle Trips (365 in and 365 out)
- 865 Saturday Midday Vehicle Trips (460 in and 405 out)

2. Mode Split

For this study, it is not anticipated that alternative modes of traffic such as buses or bicycles would significantly impact the traffic volumes in the study area. Therefore, analysis of other modes of transportation were not included in this project.

3. Determination of Pass-By and Linked-Trip Traffic

Pass-by trips as stated in the *WisDOT Traffic Impact Analysis Guidelines* are "trips currently on the roadway system, which make an intermediate stop at a generator with direct access to the roadway network that is adjacent to the original travel route…" Link-trips are "trips with one common point of origin and multiple destination points". Per WisDOT, the below list summarizes the percent of pass-by and linked trips per land use code in the build scenario. It should be noted that pass-by trips are not expected for residential or office land use types; therefore, a total of zero pass-by trips are anticipated under base and interim year scenarios. Total number of pass-by and linked trips for horizon year are shown in the complete trip generation table in **Exhibit 4-3**.

Land Use	Pass-by Trip Percentage	Linked Trip Percentage
820 – Shopping Center 1	15%	0%
820 – Shopping Center 3	15%	5%
820 – Shopping Center 4&5	15%	5%
936 – Coffee Shop	35%	10%
932 – High Turnover Restaurant	20%	10%

4. Trip Distribution

The trip distribution for the proposed development was based on daily and peak hour traffic patterns throughout the study network. The percent distributions are listed below and are also shown in **Exhibit 4-4**.

- 13% to/from Jackson Drive, north of WIS 60
- 47% to/from WIS 60 (west of Jackson Drive)
- 13% to/from Jackson Drive, South of WIS 60
- 2% to/from Eagle Drive, north of WIS 60
- 22% to/from WIS 60, east of Eagle Drive
- 3% to/from Eagle Drive, south of Jackson Drive

5. Trip Assignment

The development trips were assigned throughout the roadway network using the trip distributions described above. The following exhibits show the trip generation assigned to the roadway network for the various scenarios analyzed in this TIA.

Base Year (2020) Traffic Assignment

Exhibit 4-5A – Base Year New Trips
Exhibit 4-5C – Base Year Pass-by Trips
Exhibit 4-5D – Base Year Driveway Trips

Interim Year (2030) Traffic Assignment

Exhibit 4-6A – Interim Year New Trips
Exhibit 4-5C – Interim Year Pass-by Trips
Exhibit 4-6D – Interim Year Driveway Trips

Horizon Year (2035) Alt 1 Traffic Assignment: No additional retail access on WIS 60

Exhibit 4-7.1A – Horizon Year New Trips
Exhibit 4-7.1C – Horizon Year Pass-by Trips
Exhibit 4-7.1D – Horizon Year Driveway Trips

Horizon Year (2035) Alt 2 Traffic Assignment: Added retail access on WIS 60

Exhibit 4-7.2A – Horizon Year New Trips
Exhibit 4-7.2C – Horizon Year Pass-by Trips
Exhibit 4-7.2D – Horizon Year Driveway Trips

C. Build Traffic

Combining the collected turning movement counts, provided WisDOT traffic forecasts and the above described trip assignments build traffic volumes were developed for base, interim and horizon years. **Exhibits 4-11, 4-12, and 4-13** illustrate the build volumes for the different scenarios, respectively.

D. Chapter 4 Exhibits

Exhibit 4 1: Interim Year Background Traffic Volumes
Exhibit 4 2: Horizon Year Background Traffic Volumes
Exhibit 4 3: Trip Generation Table
Exhibit 4 4: Trip Distribution
Exhibit 4 5A: Base Year On-site Development Traffic Assignment–New Trips
Exhibit 4 5D: Base Year On-site Development Traffic Assignment–Driveway Trips
Exhibit 4 6A: Interim Year On-site Development Traffic Assignment–New Trips
Exhibit 4 6D: Interim Year On-site Development Traffic Assignment–Driveway Trips
Exhibit 4 7.1A: Horizon Year On-site Development Traffic Assignment–New Trips
Exhibit 4 7.1C: Horizon Year On-site Development Traffic Assignment–Pass-By Trips
Exhibit 4 7.1D: Horizon Year On-site Development Traffic Assignment–Driveway Trips
Exhibit 4 8.2A: Horizon Year On-site Development Traffic Assignment–New Trips
Exhibit 4 7.2C: Horizon Year On-site Development Traffic Assignment–Pass-By Trips
Exhibit 4 7.2D: Horizon Year On-site Development Traffic Assignment–Driveway Trips
Exhibit 4 12: Base Year Build Development Traffic Volumes
Exhibit 4 13: Interim Year Build Development Traffic Volumes
Exhibit 4 14: Horizon Year Build Development Traffic Volumes

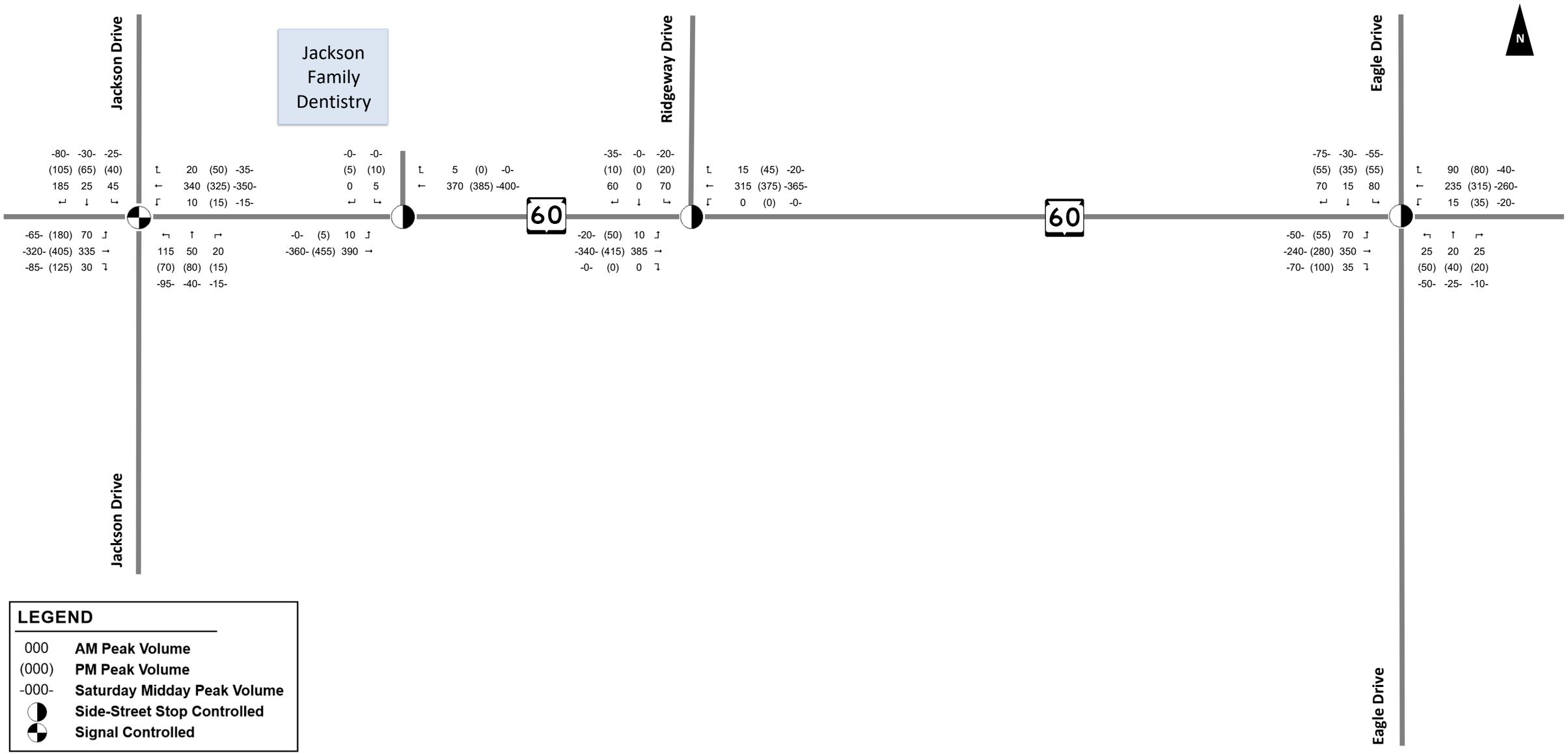

SRF Consulting Group, Inc.

May 2020

Interim Year (2030) Background Traffic Volumes

Jackson TIF District TIA

Village of Jackson, WI

Exhibit 4-1

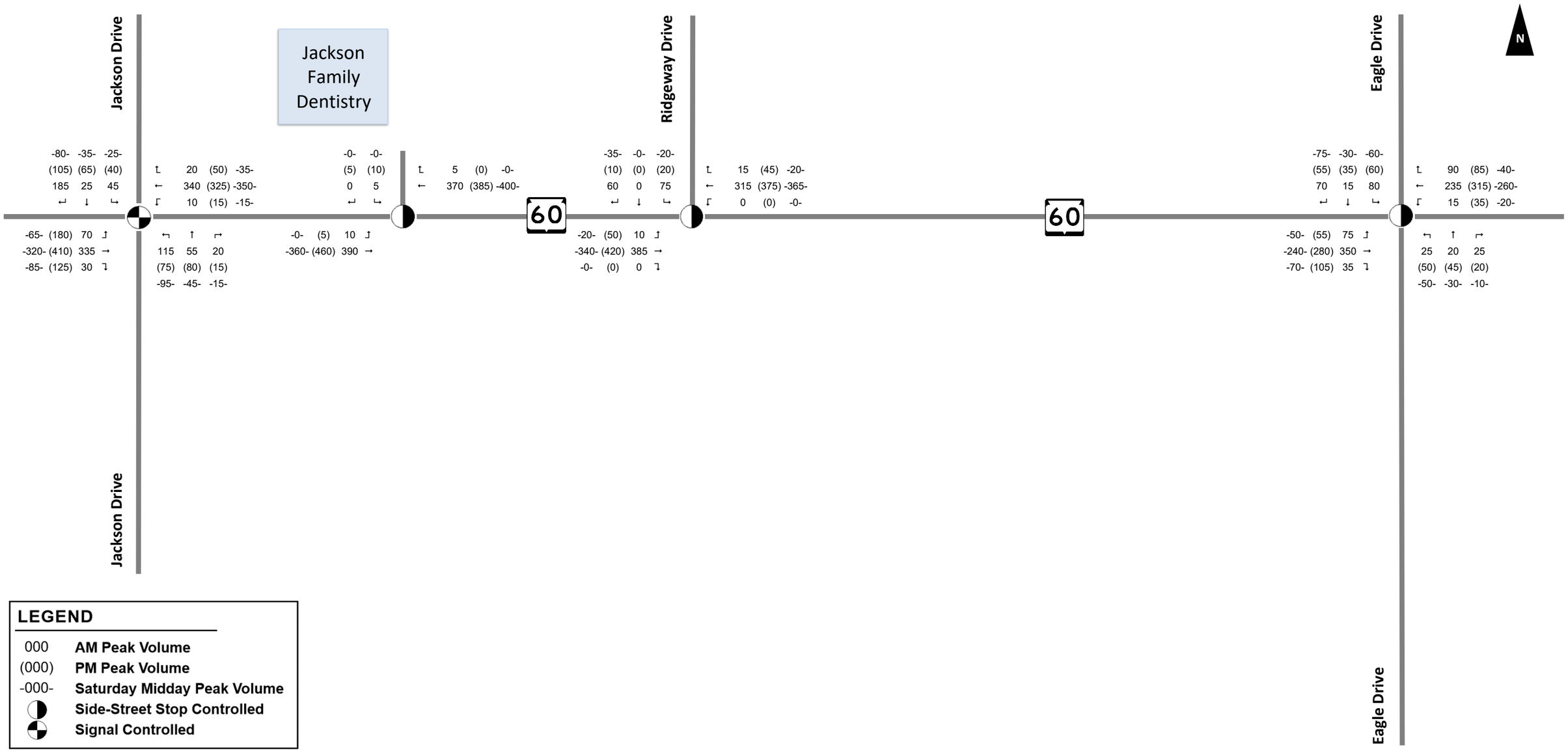

SRF Consulting Group, Inc.

May 2020

Horizon Year - 1 (2035) Background Traffic Volumes

Jackson TIF District TIA

Village of Jackson, WI

Exhibit 4-2

Scenario	Land Use	ITE Code	Size		Daily	AM			PM			SAT		
						IN	OUT	TOTAL	IN	OUT	TOTAL	IN	OUT	TOTAL
Base	Government Office Building	730	30	Employees	270	30	10	40	5	20	25	5	0	5
	Initial Scenario Driveway Trips				**270**	**30**	**10**	**40**	**5**	**20**	**25**	**5**	**0**	**5**
Interim	Government Office Building	730	30	Employees	270	30	10	40	5	20	25	5	0	5
	Low-Rise Multifamily Housing	220	136	Units	985	15	50	65	50	30	80	50	45	95
	Interim Scenario Driveway Trips				**1,255**	**45**	**60**	**105**	**55**	**50**	**105**	**55**	**45**	**100**
Horizon	Government Office Building	730	30	Employees	270	30	10	40	5	20	25	5	0	5
	Low-Rise Multifamily Housing	220	272	Units	2,020	30	95	125	90	55	145	105	85	190
	Shopping Center	820[W]	48,217	SF	1,820	30	15	45	90	95	185	110	105	215
	Shopping Center	820[N]	35,859	SF	1,350	20	15	35	65	70	135	85	75	160
	Shopping Center	820[E]	31,909	SF	1,210	20	10	30	60	65	125	75	70	145
	Coffee Shop without Drive-Through	936	2,000	SF	1640	100	100	200	40	40	80	60	60	120
	High Turnover Restaurant	932	6,000	SF	670	35	25	60	35	25	60	35	30	65
	Office Building	710	10,000	SF	110	30	5	35	0	15	15	5	0	5
	Horizon Scenario New Trips				**9090**	**295**	**275**	**570**	**385**	**385**	**770**	**480**	**425**	**905**
	Shopping Center	820[W]	5% Linked Trips		90	0	0	0	5	5	10	5	5	10
	Shopping Center	820[N]	5% Linked Trips		70	0	0	0	5	5	10	5	5	10
	Shopping Center	820[E]	0% Linked Trips		60	0	0	0	5	5	10	5	5	10
	Coffee Shop without Drive-Through	936	10% Linked Trips		0	0	0	0	0	0	0	0	0	0
	High Turnover Restaurant	932	10% Linked Trips		65	5	5	10	5	5	10	5	5	10
	Horizon Linked Trips				285	5	5	10	20	20	40	20	20	40
	Horizon Scenario Driveway Trips				**8805**	**290**	**270**	**560**	**365**	**365**	**730**	**460**	**405**	**865**
	Shopping Center	820[W]	15% Pass-by Trips		260	5	5	10	15	15	30	15	15	30
	Shopping Center	820[N]	15% Pass-by Trips		190	5	5	10	10	10	20	10	10	20
	Shopping Center	820[E]	15% Pass-by Trips		175	0	0	0	10	10	20	10	10	20
	Coffee Shop without Drive-Through	936	35% Pass-by Trips		575	35	35	70	15	15	30	20	20	40
	High Turnover Restaurant	932	20% Pass-by Trips		120	5	5	10	5	5	10	5	5	10
	Horizon Scenario Pass-by Trips				1320	50	50	100	55	55	110	60	60	120
	Total New Trips				**7485**	**240**	**220**	**460**	**310**	**310**	**620**	**400**	**345**	**745**

SRF Consulting Group, Inc.

Trip Generation Table

Jackson TIF District TIA

Village of Jackson, WI

Exhibit 4-3

13292
May 2020

SRF Consulting Group, Inc.

13292
May 2020

Trip Distribution

Jackson TIF District TIA

Village of Jackson, WI

Exhibit 4-4

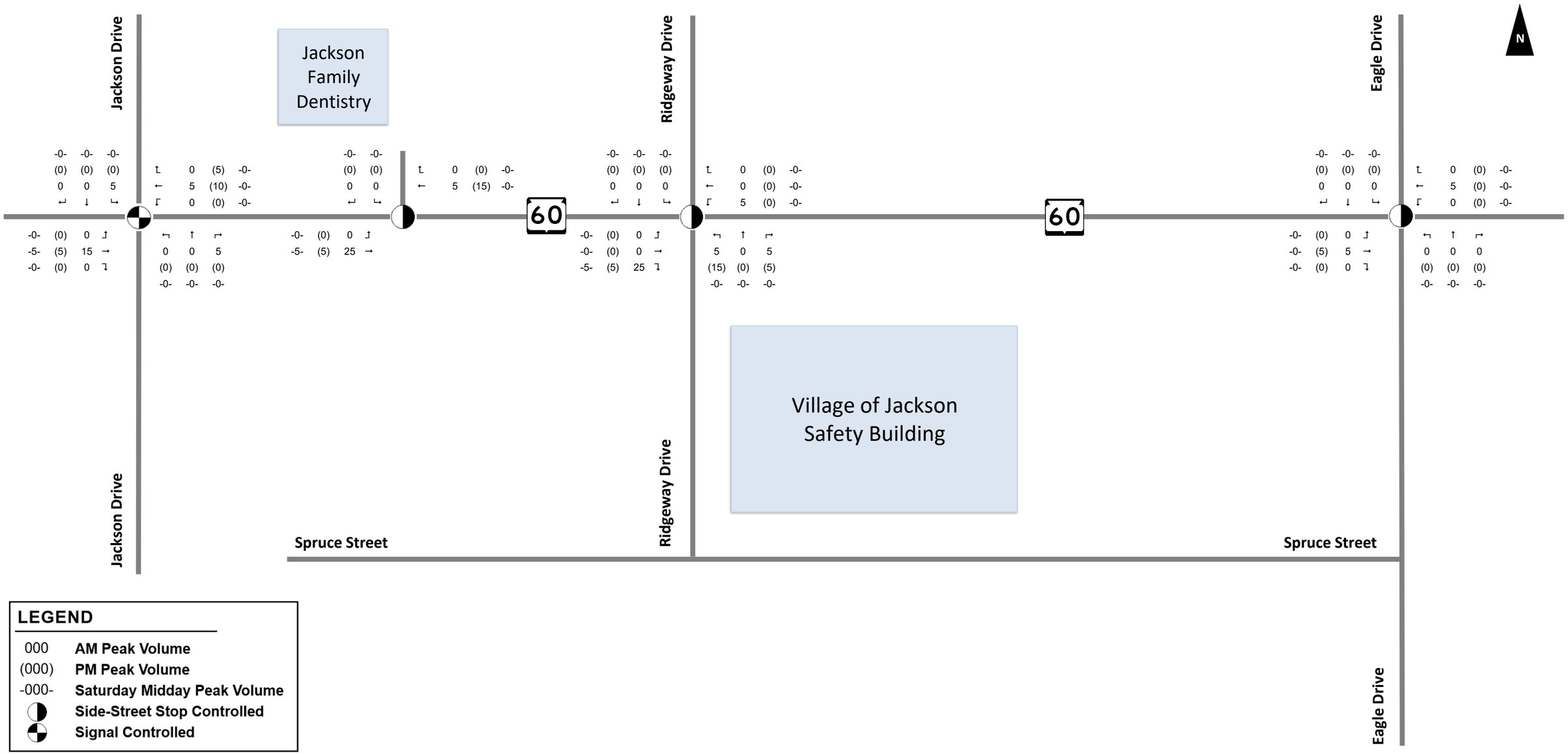

SRF Consulting Group, Inc.

May 2020

Base Year (2020) On-Site Development Traffic Assignment: New Trips

Jackson TIF District TIA

Village of Jackson, WI

Exhibit 4-5A

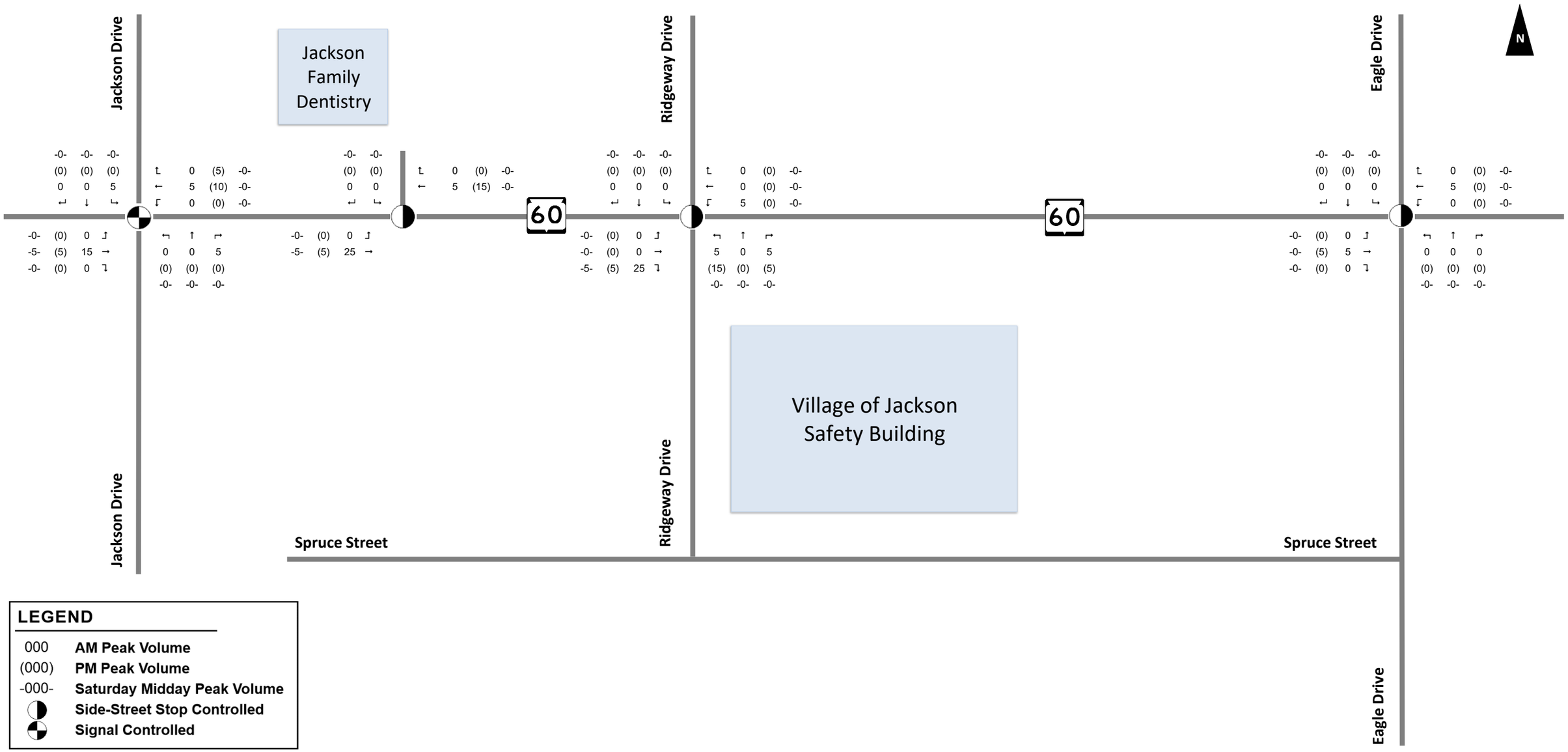

SRF Consulting Group, Inc.

May 2020

Base Year (2020) On-Site Development Traffic Assignment: Driveway Trips

Jackson TIF District TIA

Village of Jackson, WI

Exhibit 4-5D

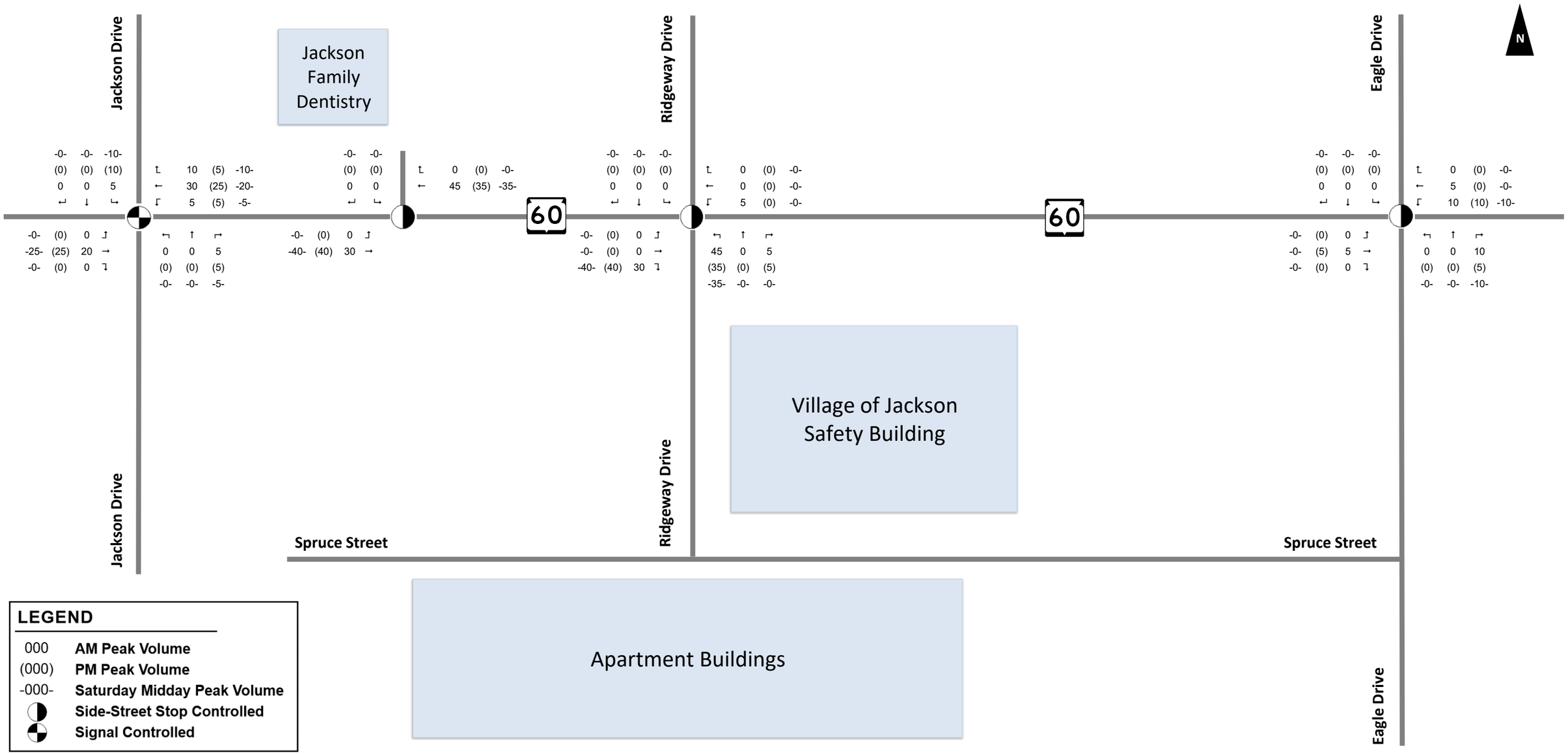

SRF Consulting Group, Inc.

May 2020

Interim Year (2030) On-Site Development Traffic Assignment: New Trips

Jackson TIF District TIA

Village of Jackson, WI

Exhibit 4-6A

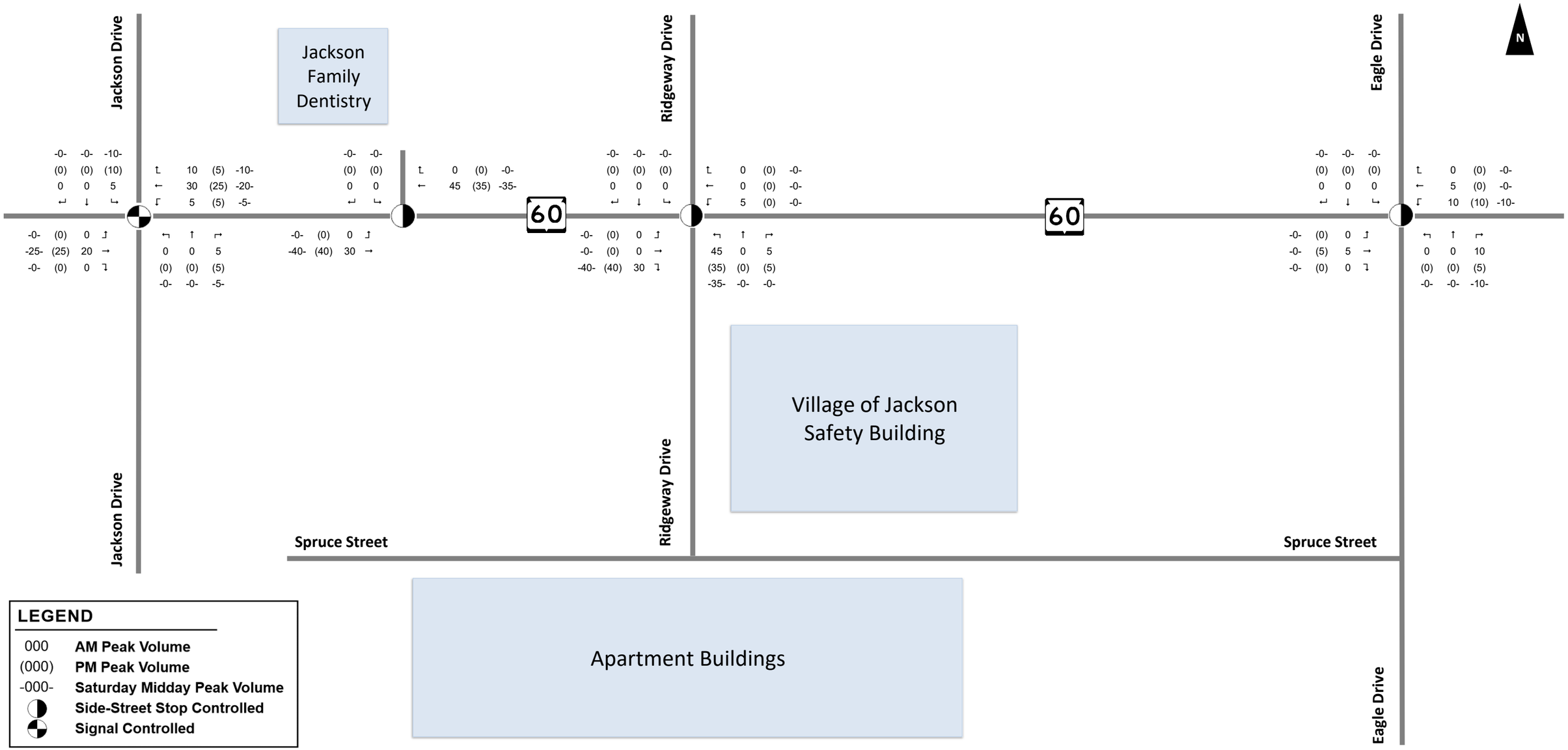

SRF Consulting Group, Inc.

May 2020

Interim Year (2030) On-Site Development Traffic Assignment: Driveway Trips

Jackson TIF District TIA

Village of Jackson, WI

Exhibit 4-6D

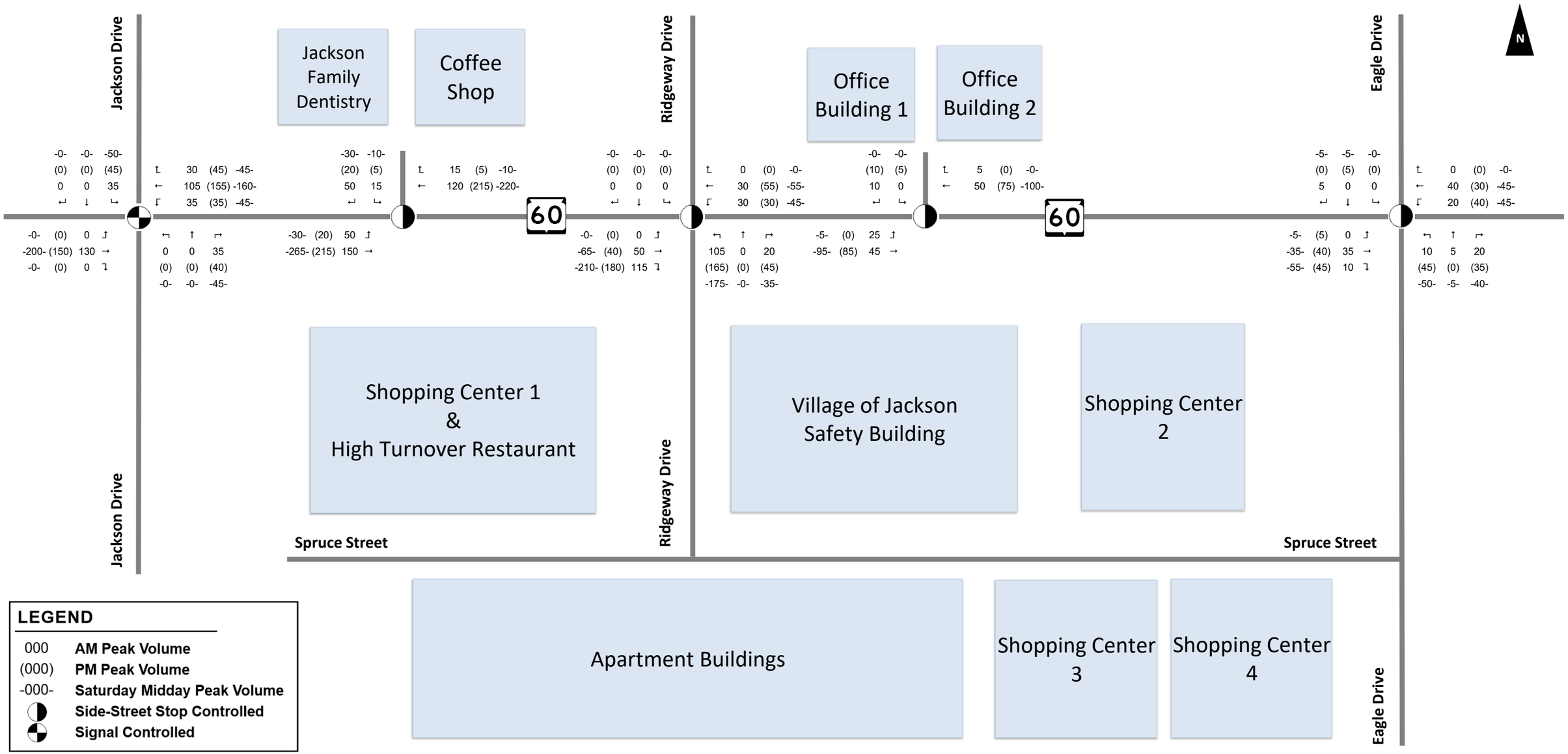

Horizon Year - 1 (2035) On-Site Development Traffic Assignment: New Trips

Jackson TIF District TIA

Village of Jackson, WI

SRF Consulting Group, Inc.

May 2020

Exhibit 4-7.1A

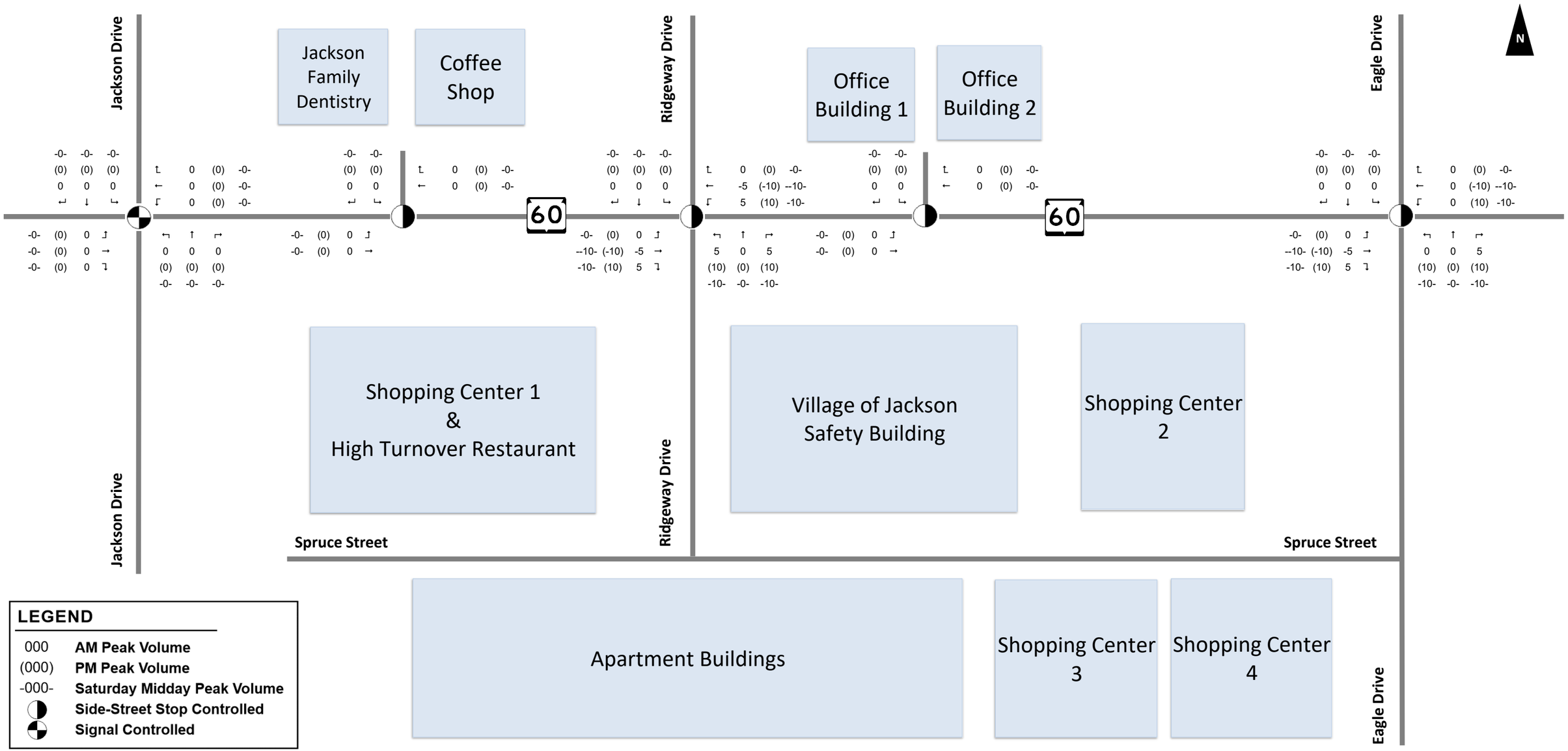

SRF Consulting Group, Inc.

May 2020

Horizon Year - 1 (2035) On-Site Development Traffic Assignment: Pass-by Trips

Jackson TIF District TIA

Village of Jackson, WI

Exhibit 4-7.1C

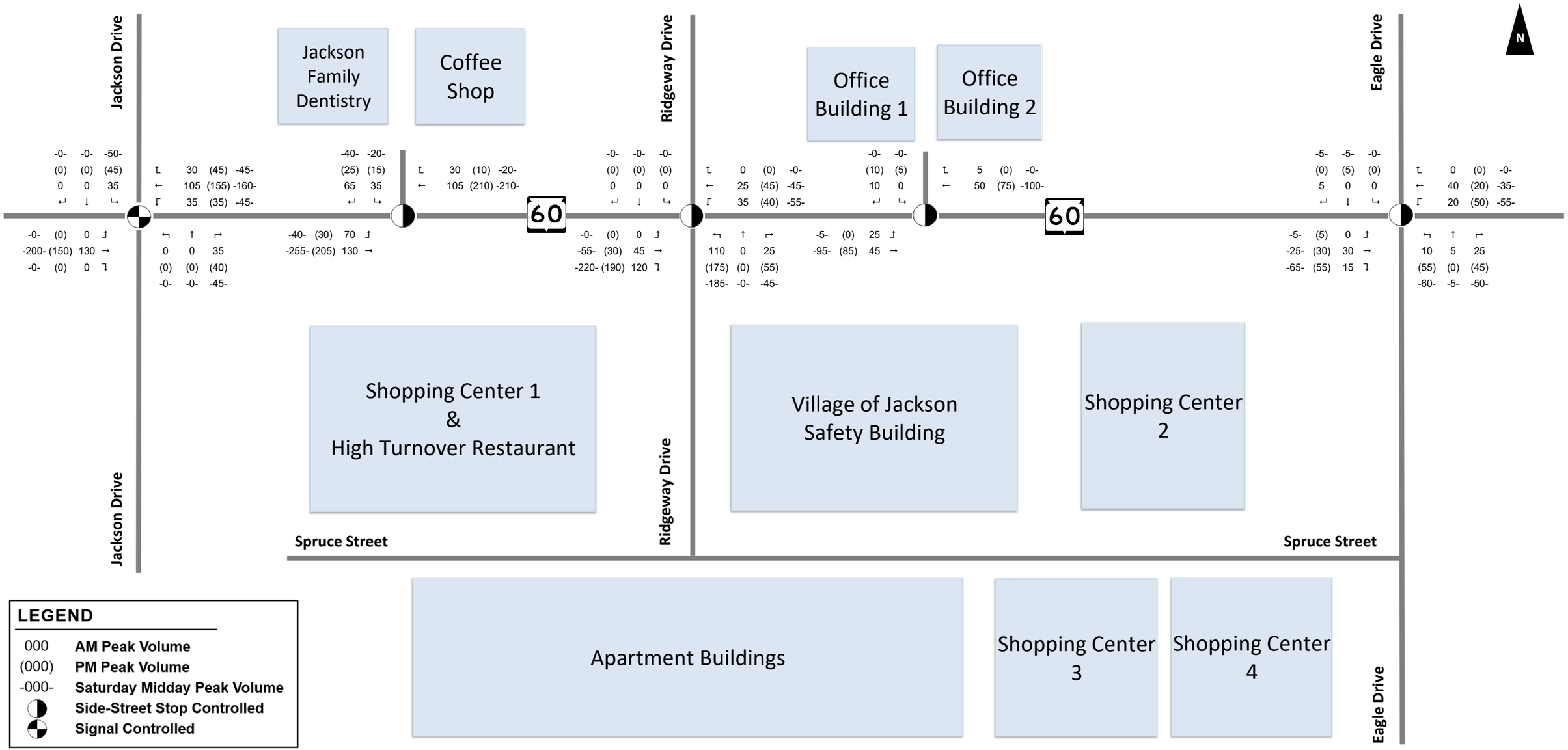

SRF Consulting Group, Inc.

May 2020

Horizon Year - 1 (2035) On-Site Development Traffic Assignment: Driveway Trips

Jackson TIF District TIA

Village of Jackson, WI

Exhibit 4-7.1D

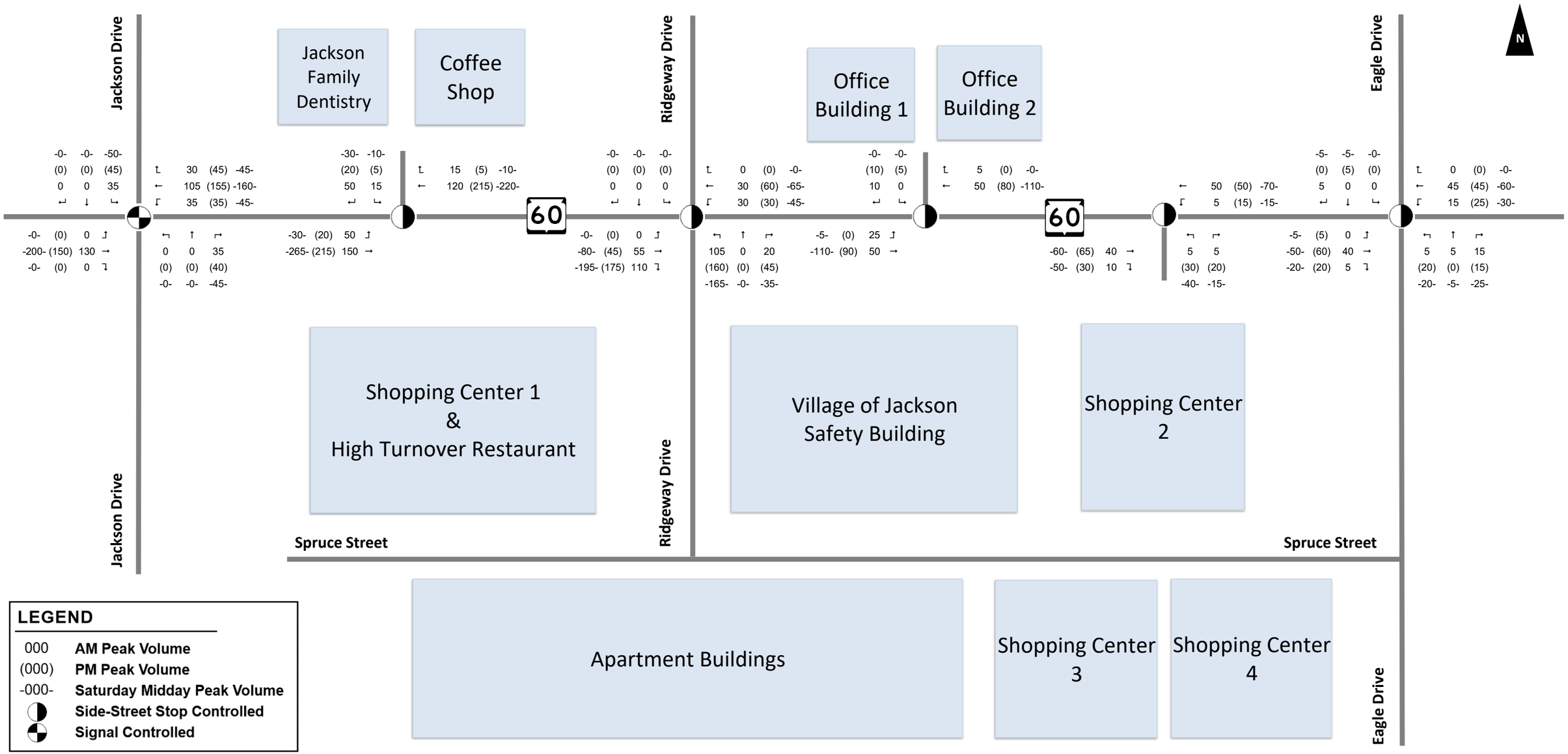

SRF Consulting Group, Inc.

May 2020

Horizon Year - 2 (2035) On-Site Development Traffic Assignment: New Trips

Jackson TIF District TIA

Village of Jackson, WI

Exhibit 4-7.2A

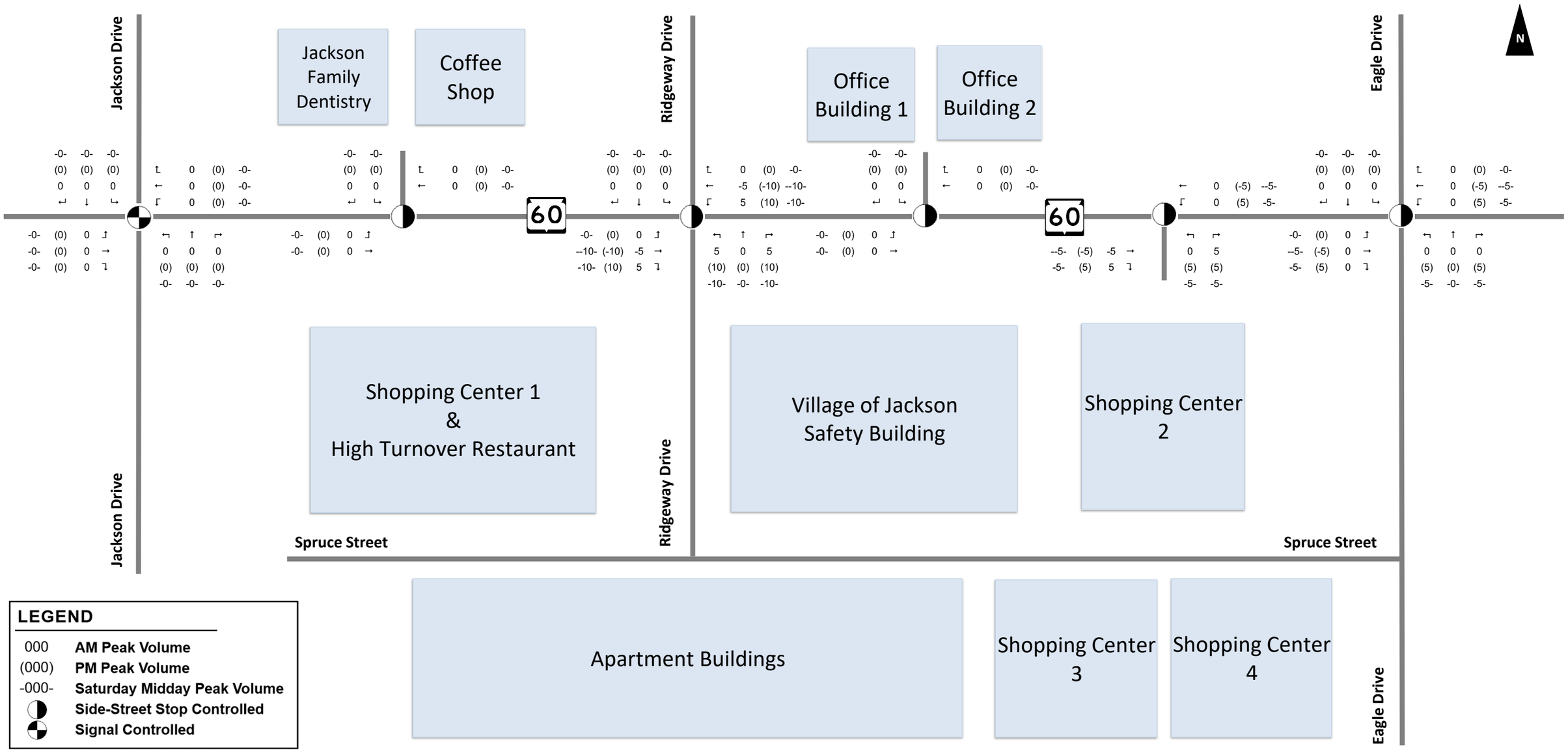

SRF Consulting Group, Inc.

May 2020

Horizon Year - 2 (2035) On-Site Development Traffic Assignment: Pass-by Trips

Jackson TIF District TIA

Village of Jackson, WI

Exhibit 4-7.2C

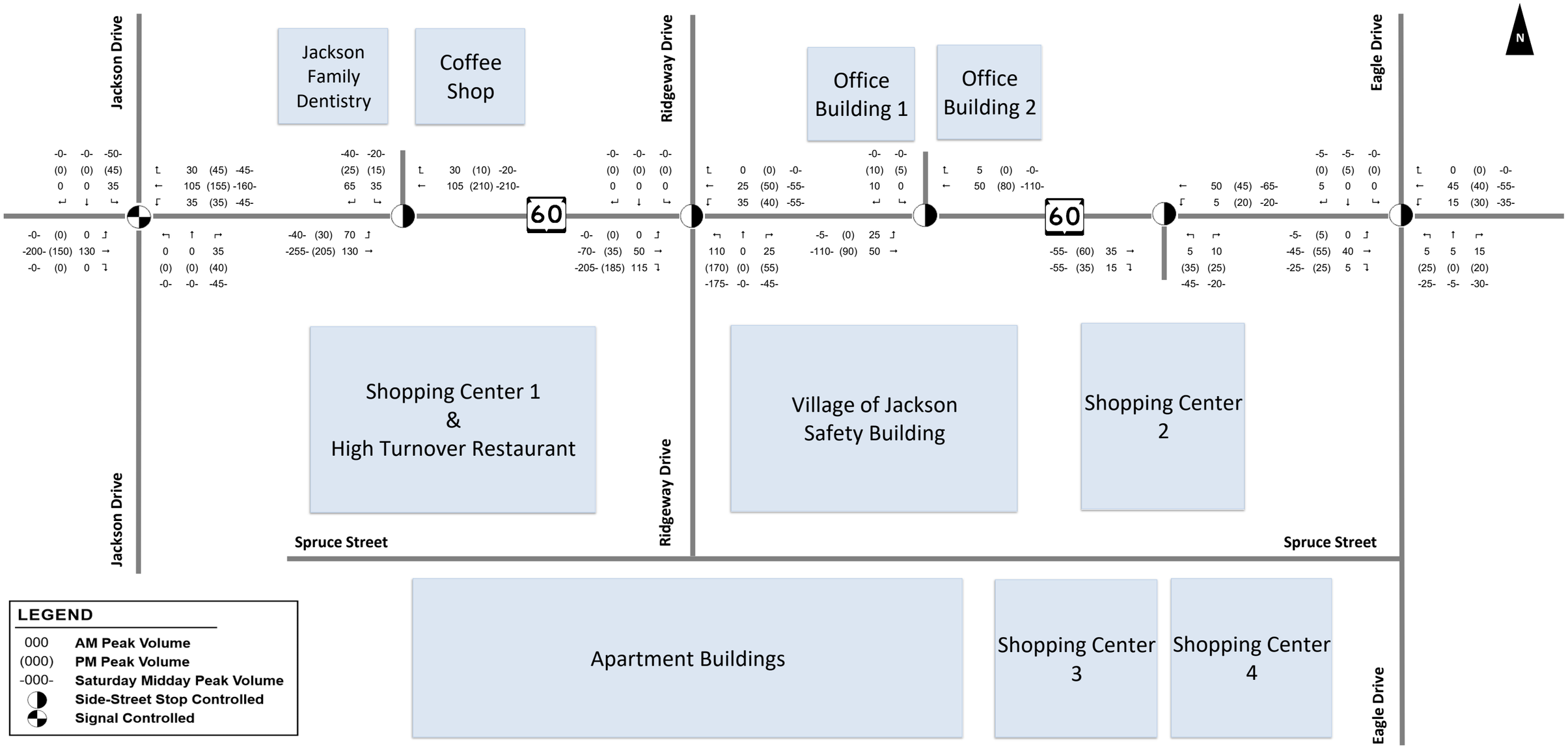

SRF Consulting Group, Inc.

May 2020

Horizon Year - 2 (2035) On-Site Development Traffic Assignment: Driveway Trips

Jackson TIF District TIA

Village of Jackson, WI

Exhibit 4-7.2D

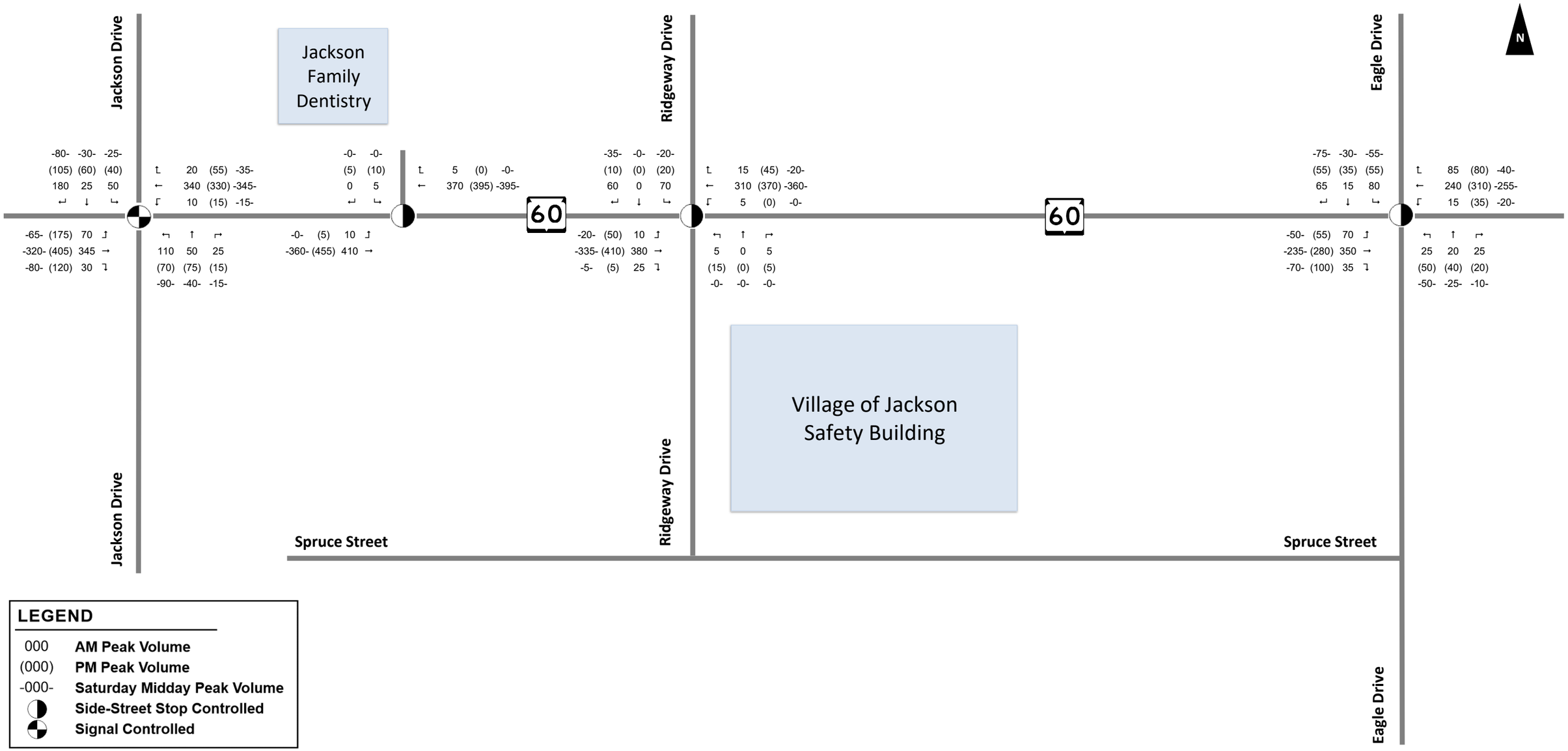

SRF Consulting Group, Inc.

May 2020

Base Year (2020) Build Development Traffic Volumes

Jackson TIF District TIA

Village of Jackson, WI

Exhibit 4-11

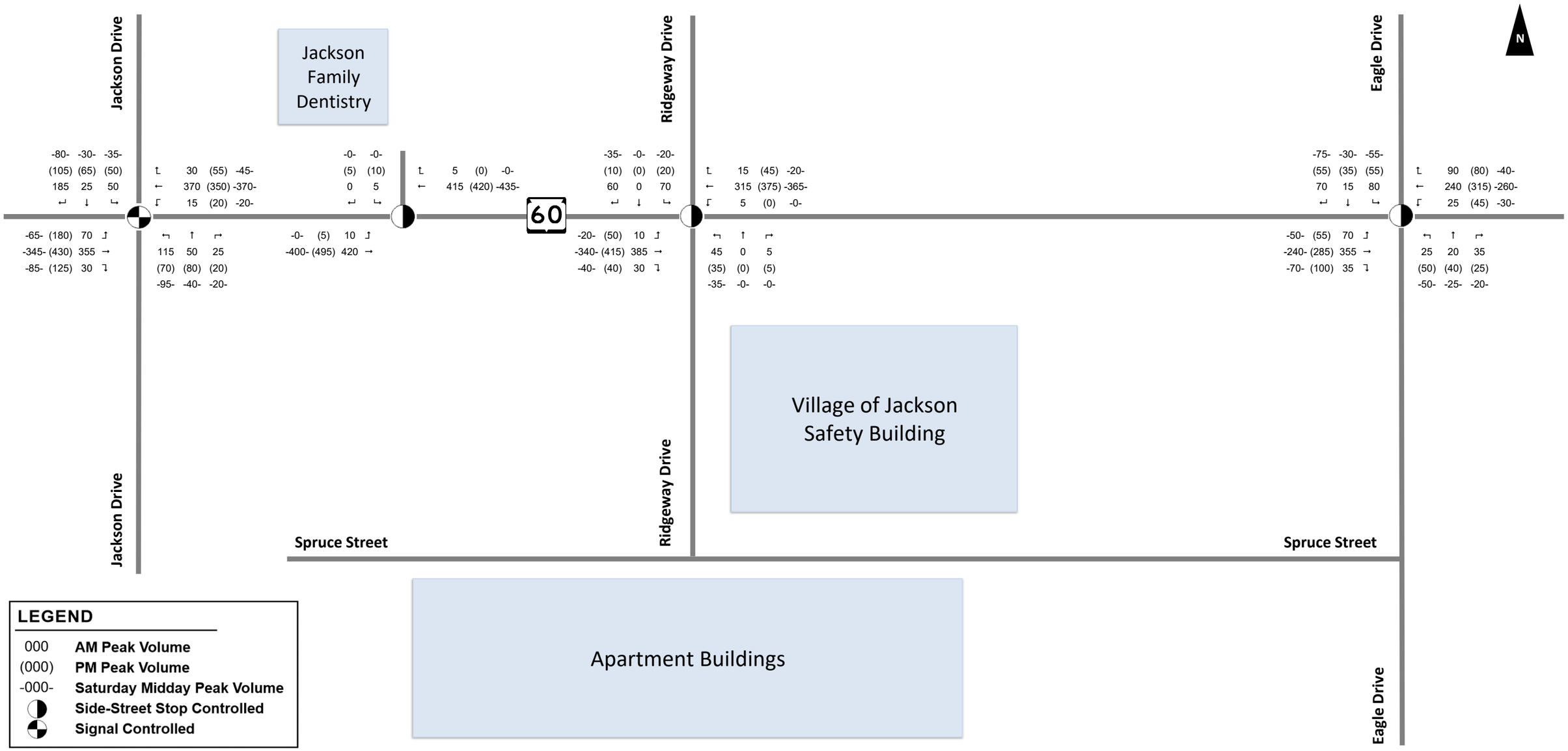

Interim Year (2030) Build Development Traffic Volumes

Jackson TIF District TIA

Village of Jackson, WI

May 2020

Exhibit 4-12

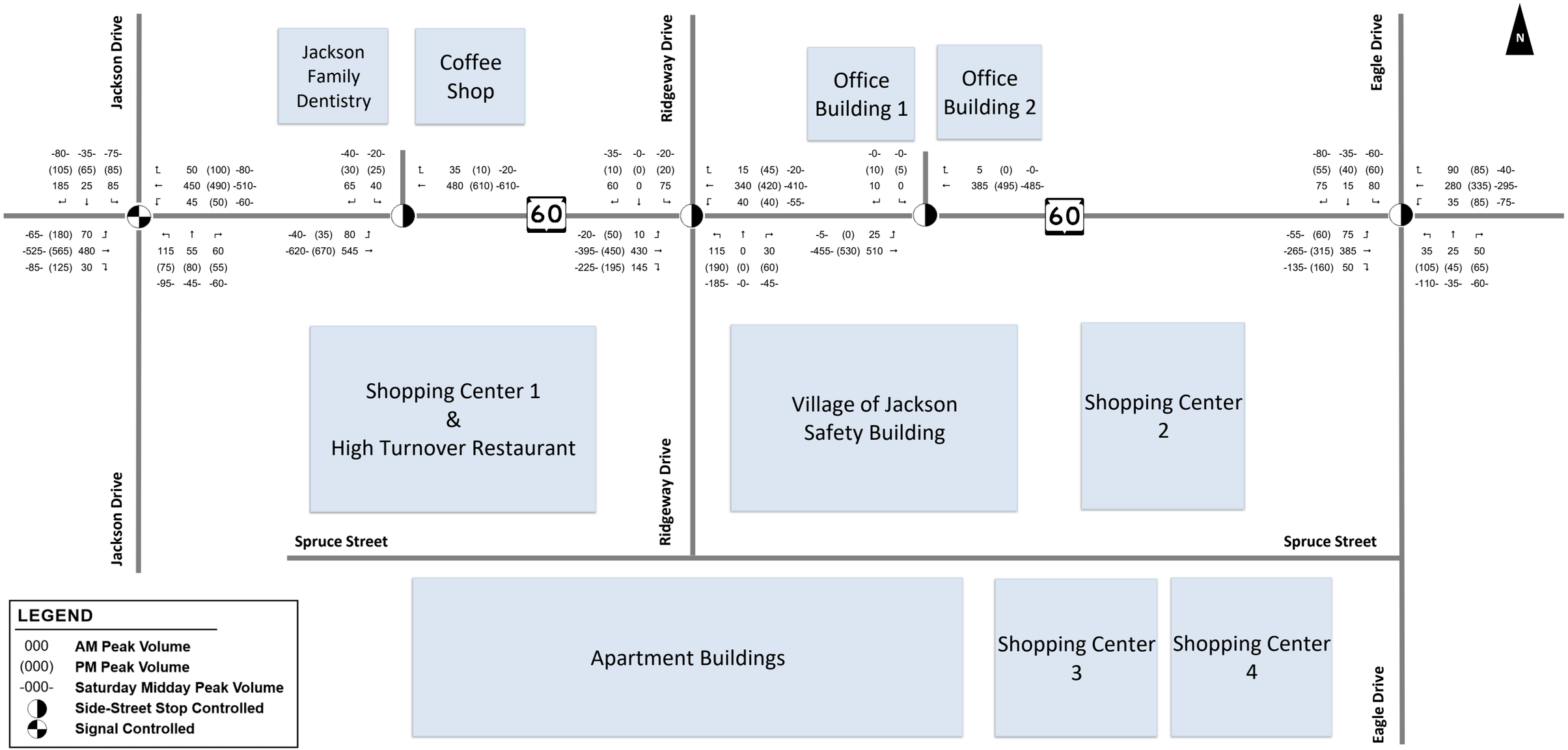

SRF Consulting Group, Inc.

May 2020

Horizon Year - 1 (2035) Build Development Traffic Volumes

Jackson TIF District TIA

Village of Jackson, WI

Exhibit 4.1-13

Chapter 5 Traffic and Improvement Analysis

A. Site Access

The Village of Jackson TIF District includes up to 10 access drives. The following describes the access drives for each development located along WIS 60, Ridgeway Rd and Spruce Street.

Jackson Public Safety Building - One access drive for the Jackson Public Safety Building is proposed to be an exit only access drive on WIS 60. Vehicles utilizing this access will be emergency response vehicles; therefore, this access drive was not evaluated in this TIA. A second access drive is anticipated to be located on Ridgeway Drive for general commuter traffic.

Residential Apartment - Access for the planned apartments is expected to be located on the proposed Spruce Street.

Coffee Shop - The access drive for the proposed coffee shop is platted to share a driveway with the existing Jackson Family Dentistry. This existing driveway currently operates as a full access driveway and was assumed to continue to operate as such with the addition of the coffee shop in this study.

Office Building - On the north side of WIS 60, the proposed two office buildings will share an access drive approximately 540 feet east of Ridgeway Drive. This was evaluated as full access, under the horizon year scenario.

Shopping Center 1/High-Turnover Restaurant - The mixed-use development of Shopping Center 1 and High-Turnover Restaurant will have access on the west side of Ridgeway Drive.

Shopping Center 2 – Per WisDOT, two access scenarios were evaluated for the anticipated shopping center located east of the safety building. The first assumes only one full access drive for the development, located on Spruce Street. The second alternative assumes two full access drives: one on WIS 60 and one on Spruce Street. The proposed driveway on WIS 60 is approximately 550 feet from Eagle Drive.

Shopping Center 3 & 4– The two shopping center developments will have access on the south side of Spruce Street.

B. Capacity/Level of Service Analysis

As described in Chapter 3, this study reviews intersections for deficiencies in capacity and level of service. The following describes the results of this analysis for background traffic and build traffic (background + site traffic) scenarios for base, interim and horizon years. Under existing

conditions, it is assumed all driveway locations are full access with one lane entering and one lane exiting. Under improvement conditions, geometric changes will be notated, if applicable.

1. Interim Year Background Traffic (2030) – Existing Conditions

Analyzing the background traffic for the interim year 2030 with existing roadway geometries and traffic control, all intersections perform at acceptable LOS except:

- The intersection of WIS 60 and Eagle Drive continues to see deficiencies on the minor approaches, similarly to the Base Year (2020) results.

Results can be found summarized in **Exhibit 5-1** and traffic analysis results found in **Appendix B**.

2. Horizon Year Background Traffic (2035) – Existing Conditions

Analyzing the background traffic for the Interim Year 2035 with existing roadway geometries and traffic control, all intersections perform at acceptable LOS except:

- The intersection of WIS 60 and Eagle Drive continues to see deficiencies on the minor approaches, similarly to the Interim Year (2030) results.

Results can be found summarized in **Exhibit 5-2** and traffic analysis results found in **Appendix B**.

3. Base Year Build Traffic (2020) – Existing Conditions

The analysis of Base Year Build Scenario volumes (2020 background traffic + 2020 site traffic) was completed with existing roadway geometries and traffic control at all intersections. This analysis found that all intersections perform at acceptable LOS except:

- The intersection of WIS 60 and Eagle Drive has deficiencies comparable to the Base Year Background Traffic (2020) results from Chapter 3.

Results can be found summarized in **Exhibit 5-3** and traffic analysis results found in **Appendix C**.

4. Interim Year Build Traffic (2030) – Existing Conditions

The analysis of Interim Year Build Scenario volumes (2030 background traffic + 2030 site traffic) was completed with existing roadway geometries and traffic control at all intersections.

This analysis found that more poor operations begin to arise with the additional residential facility. These include:

- Deficiencies on the south approach of Ridgeway Drive during morning and evening peaks
- Further increased delays at the minor approaches of Eagle Drive.

Results can be found summarized in **Exhibit 5-4** and traffic analysis results found in **Appendix C**.

5. Horizon Year Build Traffic Alt 1 (2035) – Existing Conditions

The analysis of Horizon Year Build Alternative 1 scenario volumes (2035 background traffic + 2035 site traffic) was completed with existing roadway geometries and traffic control at all intersections. Under this scenario, motorists traveling to Shopping center 2 are assumed to use the access on Spruce Street only. This analysis found that more significant increases in deficient operations begin to arise. The following WIS 60 intersections showed deficiencies:

- Jackson Drive
- The combined driveway of the dentist and coffee shop
- Ridgeway Drive
- Eagle Drive

Results can be found summarized in **Exhibit 5-4.1** and traffic analysis results found in **Appendix C**.

6. Horizon Year Build Traffic Alt 2 (2035) – Existing Conditions

The analysis of Horizon Year Build Alternative 2 Scenario volumes (2035 background traffic + 2035 site traffic) was completed with existing roadway geometries and traffic control at all intersection. Under this scenario, motorists traveling to Shopping center 2 are assumed to have the option to either use access directly on WIS 60 or via a driveway on Spruce Street. This analysis found that more significant increases in deficient operations begin to arise when compared to Horizon Background Traffic Scenario. When compared to the Horizon Year Build Alternative 1 scenario, the delays and queues found in Alternative 2 are less significant. The following WIS 60 intersections showed deficiencies:

- Jackson Drive
- The combined driveway of the dentist and coffee shop
- Ridgeway Drive
- Eagle Drive

Results can be found summarized in **Exhibit 5-4.2** and traffic analysis results found in **Appendix C**.

7. Base Year Background Traffic (2020) – Improvement Scenario

Under current conditions, the existing traffic along WIS 60 is creating delays for motorists traveling on Eagle Drive during the morning and evening peaks. During evening peak, operational deficiencies are more significant with delays over 60 seconds in the northbound direction and queues reaching the Piggly Wiggly driveway. As this condition is anticipated to degrade further, improvements would be required to improve operations to acceptable levels.

Changes in geometry alone will not improve operations to acceptable levels under all time periods, therefore updates in traffic control should be considered. Updating the intersection control to a traffic signal would improve operations for all turning movements at Eagle Drive to LOS A as well as improve safety for motorists using the north and south approaches of the intersection for all peak hour time periods. The intersection was analyzed as a four-phase actuated signal with permissive-only left turn phasing.

A roundabout is a potential alternative and could also improve traffic operations. Results of improved operations under signal control can be found summarized in **Exhibit 5-9** with traffic analysis results found in **Appendix E**.

8. Interim Year Background Traffic (2030) – Improvement Scenario

Applying the improvements mentioned from the Base Year Background Scenario, all intersections are anticipated to operate with acceptable LOS during all peak hour time periods. Results of improved operations under signal control at Eagle Drive can be found summarized in **Exhibit 5-10** with traffic analysis results found in **Appendix E**.

9. Horizon Year Background Traffic (2030) – Improvement Scenario

Applying the improvements mentioned from the Base Year Background Scenario, all intersections are anticipated to operate with acceptable LOS during all peak hour time periods. Results of improved operations under signal control at Eagle Drive can be found summarized in **Exhibit 5-11** with traffic analysis results found in **Appendix E**.

10. Base Year Build Traffic (2020) – Improvement Scenario

As previously mentioned, the results of the Base Year Build Scenarios are comparable to those of the Base Year Existing Conditions Scenario and operations do not significantly degrade with the addition of the Jackson Public Safety Building. Implementing the proposed traffic signal at Eagle Drive to improve existing operations, all turning movements under the Base Year Build Scenario would also continue to operate at LOS A. Results of improved operations for Base Year Build Scenario with improvements at Eagle Drive can be found summarized in **Exhibit 5-12** with traffic analysis results found in **Appendix E**.

11. Interim Year Build Traffic (2030) – Improvement Scenario

The results of the Interim Year Build Scenario show operational deficiencies at Ridgeway Drive and Eagle Drive.

The results at Eagle Drive are comparable to those of the Interim Year Existing Conditions and operations do not significantly degrade with the addition of the Jackson Public Safety Building and residential apartments. Implementing the proposed traffic signal at Eagle Drive to improve existing operations, all turning movements under the Interim Year Build Scenario would also continue to operate at LOS A.

To improve operations at Ridgeway Drive, the following improvements could be considered:

1. Addition of median on WIS 60 to allow for 2-stage crossing (not analyzed and assumed to be not feasible due to ROW constraints of this urban area)
2. Change to active traffic control by signalizing intersection with EB and WB left turn lane addition and separating the NB movement into one shared left turn/through lane and one right turn lane. (Analyzed)

Improvement 1 (Median with 2-stage crossing) was not considered a feasible option due to associated costs and property impacts required. Evaluating a traffic signal under existing geometry (plus addition of southern approach) proved adequate for improving operations to LOS A for all turning movements. An important additional consideration when converting a two-way stop controlled intersection to a traffic signal is the safety impact to the previously-free-flow mainline lane geometry. This alternative was analyzed assuming the signal would be installed in conjunction with new separated left-turn storage lanes on WIS 60 to facilitate left turn movements outside the main through-vehicle lanes on WIS 60. This will provide enhanced safety of these movements and offer some additional LOS improvement.

Though a roundabout could also be considered, this improvement was not analyzed due to the anticipated cost associated with construction. Results of improved operations for Interim Year Build Scenario can be found summarized in **Exhibit 5-13** with traffic analysis results found in **Appendix E**.

12. Horizon Year Build Traffic Alt 1 (2035) – Improvement Scenario

The TIF District traffic in year 2035 begins to significantly change operations at multiple intersections along WIS 60 including the following: Jackson Drive, combined dentist/coffee shop driveway, Ridgeway Drive, and Eagle Drive. The deficiencies present at Jackson Drive and the combined dentist/coffee shop driveway reach LOS D. This level of delay is still acceptable and therefore improvements are not necessary at these locations. Using previously mentioned improvements as a baseline, Ridgeway Drive and Eagle Drive (both signalized or actively controlled by 2035) both continue to operate under acceptable conditions.

Results of improved operations for Horizon Year Build Alternative 1 Scenario can be found summarized in **Exhibit 5-14.1** with traffic analysis results found in **Appendix E**.

13. Horizon Year Build Traffic Alt 2 (2035) – Improvement Scenario

Similar to Horizon Year Build Alternative 1, the TIF District traffic in year 2035 will begin to significantly change operations at multiple intersections along WIS 60. The previously-mentioned improvements for the deficiently operating intersections also can be applied under this scenario. Therefore, the following improvements were analyzed under this alternative:

- Signalized intersection at Ridgeway Drive with EB and WB left turn lane addition and separating of the NB movement into one shared left turn/through lane and one right turn lane.
- Signalized intersection at Eagle Drive

Results of improved operations for Horizon Year Build Alternative 1 Scenario can be found summarized in **Exhibit 5-14.2** with traffic analysis results found in **Appendix E**.

C. Queueing Analysis

The 95th percentile queue is used to verify adequacy of intersection geometries to store queued vehicles safely (i.e. storage bays provide sufficient room for vehicles to slow down as well as wait to complete their anticipated turning movement without impeding other intersections or driveways). To complete this review, a deceleration distance is added to the 95th percentile queue. This total distance is then used to either verify existing geometries are adequate or if additional improvements are necessary. The 95th percentile queues from the improvement analysis are in the following exhibits:

- Exhibit 5-18 Base Year Background Traffic Queues
- Exhibit 5-19 Interim Year Background Traffic Queues
- Exhibit 5-20 Horizon Year Background Traffic Queues
- Exhibit 5-21 Base Year Build Development Queues
- Exhibit 5-22 Interim Year Build Development Queues
- Exhibit 5-23.1 Horizon Year Alternative 1 Build Development Queues
- Exhibit 5-23.2 Horizon Year Alternative 2 Build Development Queues

D. Pedestrian, Bicycle, and Multi-Use Trail Considerations

Currently, pedestrians are accommodated along WIS 60 from Jackson Drive to Ridgeway Drive via a sidewalk present on the north side of the roadway. This sidewalk is scheduled to be replaced as part of WisDOT project 2310-10-00. It is anticipated that a multiuse path will be constructed in the future to span from Coffeeville driveway (between Jackson Drive and Ridgeway Drive) to Eagle Drive. Sidewalks will be constructed along the new sections of Ridgeway Drive and Spruce Street to provide access to pedestrians to safely travel to and from the new developments.

E. Speed Consideration/Sight Distance

Proposed access roadways (Ridgeway Drive extension) and driveways along WIS 60 are all new access points. No existing sight-distance considerations are applicable and given the very flat profile of WIS 60 in this area, no sight-distance challenges are anticipated by future driveway permit projects.

Permit coordination is currently underway for the Ridgeway Drive extension and the public safety building emergency exit access point and detailed design has been presented to WisDOT as part of that permit coordination. All future access points identified and analyzed in this study would be subject to WisDOT access point design criteria and sight distance requirements.

To allow initial confidence that sight distance is not currently a significant concerns for the access points analyzed in this study, intersection sight distance figures and calculations can be found in **Appendix A**. **Exhibit 5-27** shows that WIS 60 is a relatively flat roadway with little if any vertical sight distance problems.

The village of Jackson intends to pursue a speed limit reduction within the project limits that would reduce the 35mph speed zone to 25mph west of Eagle Drive.

F. Traffic Control Needs

As mentioned in the Section B above, the following scenarios and intersections could benefit from the implementation of traffic signals.

1. Base, Interim and Horizon Background Traffic Scenarios

- WIS 60 and Eagle Drive

2. Base Build Traffic Scenarios

- WIS 60 and Eagle Drive

3. Interim and Horizon Build Traffic Scenarios

- WIS 60 and Eagle Drive
- WIS 60 and Ridgeway Drive

Per WisDOT guidelines, an Intersection Control Evaluation (ICE) must be completed for locations whose intersection control is recommended to change. Improvement analysis in Chapter 5-B reflect that both traffic signals and roundabouts could be considered for improving operations. Further review of these intersections in a Phase II ICE is recommended. Phase I ICE documents reviewing these potential improvements for the above intersections can be found in **Appendix J**.

G. Warrant Analysis

Per WisDOT guidelines, a traffic signal must meet at least Warrant 1 or 2 with the addition of Warrant 3 in some situations. Under Background Traffic Scenarios, existing or forecasted traffic volumes were used to complete warrants. For Build traffic scenarios, the 12-hour traffic distributions spreadsheet, provided by WisDOT, as well as ITE 24-hour traffic distributions were utilized to determine the additional site traffic anticipated to be added to the signal during non-peak periods. The following summarizes the findings of the traffic signal warrants.

1. Base, Interim and Horizon Background Traffic Scenarios

WIS 60 and Eagle Drive

The intersection **does not currently nor in the horizon year (2035) meet signal warrants**. This signal warrant worksheets for base and horizon background scenarios can be found in **Appendix I**.

2. Base Build Traffic Scenarios

WIS 60 and Eagle Drive

Using base year (2020) build volumes, it was determined that the intersection **will not meet warrants** under this scenario.

3. Interim Build Traffic Scenarios

WIS 60 and Eagle Drive

Using interim year (2030) build volumes, it was determined that the intersection **will not meet warrants** under this scenario.

WIS 60 and Ridgeway Drive

Using interim year (2030) build volumes, it was determined that the intersection **will not meet warrants** under this scenario.

4. Horizon Build Traffic Scenarios

WIS 60 and Eagle Drive

WisDOT and ITE 12-hour land use distributions were used to distribute the peak hour development traffic and pass-by trips to the additional time periods used in this signal warrant. Analyzing both the horizon year (2035) build volumes from alternatives 1 and 2, it was determined that the intersection **will meet warrants** under both horizon build scenarios.

WIS 60 and Ridgeway Drive

WisDOT and ITE 12-hour land use distributions were used to distribute the peak hour development traffic and pass-by trips to the additional time periods used in this signal warrant. Analyzing both the horizon year (2035) build volumes from alternatives 1 and 2, it was determined that the intersection **will meet warrants** under both horizon build scenarios.

H. Chapter 5 Exhibits

Exhibit 5-1: Interim Year Background Traffic – Capacity/LOS Analysis
Exhibit 5-2: Horizon Year Background Traffic – Capacity/LOS Analysis
Exhibit 5-3: Base Year Build Development – Capacity/LOS Analysis
Exhibit 5-4: Interim Year Build Development – Capacity/LOS Analysis
Exhibit 5-5.1: Horizon Year Build Development Alt 1– Capacity/LOS Analysis
Exhibit 5-5.2: Horizon Year Build Development Alt 2– Capacity/LOS Analysis
Exhibit 5-9: Base Year Background Traffic - Improved Capacity/LOS Analysis
Exhibit 5-10: Interim Year Background Traffic – Improved Capacity/LOS Analysis
Exhibit 5-11: Horizon Year Background Traffic - Improved Capacity/LOS Analysis
Exhibit 5-12: Base Year Build Development - Improved Capacity/LOS Analysis
Exhibit 5-13: Interim Year Build Development - Improved Capacity/LOS Analysis
Exhibit 5-14.1: Horizon Year Build Development Alt 1 - Improved Capacity/LOS Analysis
Exhibit 5-14.2: Horizon Year Build Development Alt 1 - Improved Capacity/LOS Analysis
Exhibit 5-18: Maximum Queue Lengths, Improved Transportation System– Base Year Background Traffic
Exhibit 5-19: Maximum Queue Lengths, Improved Transportation System– Interim Year Background Traffic
Exhibit 5-20: Maximum Queue Lengths, Improved Transportation System– Horizon Year Background Traffic
Exhibit 5-21: Maximum Queue Lengths, Improved Transportation System– Base Year Build Development
Exhibit 5-22: Maximum Queue Lengths, Improved Transportation System– Interim Year Build Development
Exhibit 5-23.1: Maximum Queue Lengths, Improved Transportation System– Horizon Year Build Development Alt 1
Exhibit 5-23.2: Maximum Queue Lengths, Improved Transportation System– Horizon Year Build Development Alt 2

Weekday Morning Peak - Interim No Build

Intersection	Overall		By Approach	Eastbound			Westbound			Northbound			Southbound		
	Delay (s)	LOS		EBL	EBT	EBR	WBL	WBT	WBR	NBL	NBT	NBR	SBL	SBT	SBR
1: Jackson Dr & WIS-60	16.0	B	Lane Configuration	1	1>	0	0	<1>	0	1	1>	0	1	1>	0
			Volume	70	335	30	10	340	20	115	50	20	45	25	185
			Delay (s)	9.7	0.0	9.8	19.6	0.0	0.0	23.7	0.0	15.7	17.1	0.0	18.1
			LOS	A	A	A	B	A	A	C	A	B	B	A	B
2: WIS-60 & Dentist/Coffee Shop Driveway	0.2	A	Lane Configuration	0	1	-	-	1	0	-	-	-	1>	-	0
			Volume	10	390	-	-	370	5	-	-	-	5	-	0
			Delay (s)	8.2	-	-	-	-	-	-	-	-	16.2	-	-
			LOS	A	-	-	-	-	-	-	-	-	C	-	-
3: WIS-60 & Ridgeway Dr	2.9	A	Lane Configuration	0	<1	-	-	1>	0	-	-	-	1>	-	0
			Volume	10	385	-	-	315	15	-	-	-	70	-	60
			Delay (s)	8.1	0.0	-	-	-	-	-	-	-	18.4	-	-
			LOS	A	A	-	-	-	-	-	-	-	C	-	-
6: Eagle Dr & WIS-60	6.8	A	Lane Configuration	1	1>	0	1	1	1	0	<1>	0	1	1>	0
			Volume	70	350	35	15	235	90	25	20	25	80	15	70
			Delay (s)	8.4	-	-	8.4	-	-	-	27.6	-	40.9	13.2	-
			LOS	A	-	-	A	-	-	-	D	-	E	B	-

Weekday Evening Peak - Interim No Build

Intersection	Overall		By Approach	Eastbound			Westbound			Northbound			Southbound		
	Delay (s)	LOS		EBL	EBT	EBR	WBL	WBT	WBR	NBL	NBT	NBR	SBL	SBT	SBR
1: Jackson Dr & WIS-60	14.7	B	Lane Configuration	1	1>	0	0	<1>	0	1	1>	0	1	1>	0
			Volume	180	405	125	15	325	50	70	80	15	40	65	105
			Delay (s)	8.5	0.0	9.5	18.9	0.0	0.0	24.2	0.0	18.6	20.4	0.0	20.2
			LOS	A	A	A	B	A	A	C	A	B	C	A	C
2: WIS-60 & Dentist/Coffee Shop Driveway	0.3	A	Lane Configuration	0	1	-	-	1	0	-	-	-	1>	-	0
			Volume	5	455	-	-	385	0	-	-	-	10	-	5
			Delay (s)	8.2	-	-	-	-	-	-	-	-	15.4	-	-
			LOS	A	-	-	-	-	-	-	-	-	C	-	-
3: WIS-60 & Ridgeway Dr	1.1	A	Lane Configuration	0	<1	-	-	1>	0	-	-	-	1>	-	0
			Volume	50	415	-	-	375	45	-	-	-	20	-	10
			Delay (s)	8.5	0.0	-	-	-	-	-	-	-	18.9	-	-
			LOS	A	A	-	-	-	-	-	-	-	C	-	-
6: Eagle Dr & WIS-60	11.6	B	Lane Configuration	1	1>	0	1	1	1	0	<1>	0	1	1>	0
			Volume	55	280	100	35	315	80	50	40	20	55	35	55
			Delay (s)	8.6	-	-	8.4	-	-	-	71.3	-	47.6	19.9	-
			LOS	A	-	-	A	-	-	-	F	-	E	C	-

Saturday Midday Peak - Interim No Build

Intersection	Overall		By Approach	Eastbound			Westbound			Northbound			Southbound		
	Delay (s)	LOS		EBL	EBT	EBR	WBL	WBT	WBR	NBL	NBT	NBR	SBL	SBT	SBR
1: Jackson Dr & WIS-60	12.7	B	Lane Configuration	1	1>	0	0	<1>	0	1	1>	0	1	1>	0
			Volume	65	320	85	15	350	35	95	40	15	25	30	80
			Delay (s)	7.3	0.0	7.0	15.5	0.0	0.0	20.1	0.0	16.3	17.2	0.0	17.3
			LOS	A	A	A	B	A	A	C	A	B	B	A	B
2: WIS-60 & Dentist/Coffee Shop Driveway	0.0	A	Lane Configuration	0	1	-	-	1	0	-	-	-	1>	-	0
			Volume	0	360	-	-	400	0	-	-	-	0	-	0
			Delay (s)	-	-	-	-	-	-	-	-	-	0.0	-	-
			LOS	-	-	-	-	-	-	-	-	-	A	-	-
3: WIS-60 & Ridgeway Dr	1.1	A	Lane Configuration	0	<1	-	-	1>	0	-	-	-	1>	-	0
			Volume	20	340	-	-	365	20	-	-	-	20	-	35
			Delay (s)	8.2	0.0	-	-	-	-	-	-	-	13.3	-	-
			LOS	A	A	-	-	-	-	-	-	-	B	-	-
6: Eagle Dr & WIS-60	5.6	A	Lane Configuration	1	1>	0	1	1	1	0	<1>	0	1	1>	0
			Volume	50	240	70	20	260	40	50	25	10	55	30	75
			Delay (s)	8.1	-	-	8.0	-	-	-	24.6	-	20.8	13.5	-
			LOS	A	-	-	A	-	-	-	C	-	C	B	-

Weekday Morning Peak - Horizon No Build

Intersection	Overall		By Approach	Eastbound			Westbound			Northbound			Southbound		
	Delay (s)	LOS		EBL	EBT	EBR	WBL	WBT	WBR	NBL	NBT	NBR	SBL	SBT	SBR
1: Jackson Dr & WIS-60	16.0	B	Lane Configuration	1	1>	0	0	<1>	0	1	1>	0	1	1>	0
			Volume	70	335	30	10	340	20	115	55	20	45	25	185
			Delay (s)	9.7	0.0	9.8	19.6	0.0	0.0	23.7	0.0	15.8	17.2	0.0	18.1
			LOS	A	A	A	B	A	A	C	A	B	B	A	B
2: WIS-60 & Dentist/Coffee Shop Driveway	0.2	A	Lane Configuration	0	1	-	-	1	0	-	-	-	1>	-	0
			Volume	10	390	-	-	370	5	-	-	-	5	-	0
			Delay (s)	8.2	-	-	-	-	-	-	-	-	16.2	-	-
			LOS	A	-	-	-	-	-	-	-	-	C	-	-
3: WIS-60 & Ridgeway Dr	3.1	A	Lane Configuration	0	<1	-	-	1>	0	-	-	-	1>	-	0
			Volume	10	385	-	-	315	15	-	-	-	75	-	60
			Delay (s)	8.1	0.0	-	-	-	-	-	-	-	19.0	-	-
			LOS	A	A	-	-	-	-	-	-	-	C	-	-
6: Eagle Dr & WIS-60	7.0	A	Lane Configuration	1	1>	0	1	1	1	0	<1>	0	1	1>	0
			Volume	75	350	35	15	235	90	25	20	25	80	15	70
			Delay (s)	8.4	-	-	8.4	-	-	-	28.4	-	42.3	13.3	-
			LOS	A	-	-	A	-	-	-	D	-	E	B	-

Weekday Evening Peak - Horizon No Build

Intersection	Overall		By Approach	Eastbound			Westbound			Northbound			Southbound		
	Delay (s)	LOS		EBL	EBT	EBR	WBL	WBT	WBR	NBL	NBT	NBR	SBL	SBT	SBR
1: Jackson Dr & WIS-60	14.8	B	Lane Configuration	1	1>	0	0	<1>	0	1	1>	0	1	1>	0
			Volume	180	410	125	15	325	50	75	80	15	40	65	105
			Delay (s)	8.6	0.0	9.7	19.1	0.0	0.0	24.3	0.0	18.5	20.4	0.0	20.1
			LOS	A	A	A	B	A	A	C	A	B	C	A	C
2: WIS-60 & Dentist/Coffee Shop Driveway	0.3	A	Lane Configuration	0	1	-	-	1	0	-	-	-	1>	-	0
			Volume	5	460	-	-	385	0	-	-	-	10	-	5
			Delay (s)	8.2	-	-	-	-	-	-	-	-	15.5	-	-
			LOS	A	-	-	-	-	-	-	-	-	C	-	-
3: WIS-60 & Ridgeway Dr	1.1	A	Lane Configuration	0	<1	-	-	1>	0	-	-	-	1>	-	0
			Volume	50	420	-	-	375	45	-	-	-	20	-	10
			Delay (s)	8.5	0.0	-	-	-	-	-	-	-	19.0	-	-
			LOS	A	A	-	-	-	-	-	-	-	C	-	-
6: Eagle Dr & WIS-60	13.0	B	Lane Configuration	1	1>	0	1	1	1	0	<1>	0	1	1>	0
			Volume	55	280	105	35	315	85	50	45	20	60	35	55
			Delay (s)	8.6	-	-	8.4	-	-	-	77.9	-	54.6	20.0	-
			LOS	A	-	-	A	-	-	-	F	-	F	C	-

Saturday Midday Peak - Horizon No Build

Intersection	Overall		By Approach	Eastbound			Westbound			Northbound			Southbound		
	Delay (s)	LOS		EBL	EBT	EBR	WBL	WBT	WBR	NBL	NBT	NBR	SBL	SBT	SBR
1: Jackson Dr & WIS-60	12.7	B	Lane Configuration	1	1>	0	0	<1>	0	1	1>	0	1	1>	0
			Volume	65	320	85	15	350	35	95	45	15	25	35	80
			Delay (s)	7.3	0.0	7.0	15.5	0.0	0.0	20.2	0.0	16.4	17.3	0.0	17.3
			LOS	A	A	A	B	A	A	C	A	B	B	A	B
2: WIS-60 & Dentist/Coffee Shop Driveway	0.0	A	Lane Configuration	0	1	-	-	1	0	-	-	-	1>	-	0
			Volume	0	360	-	-	400	0	-	-	-	0	-	0
			Delay (s)	-	-	-	-	-	-	-	-	-	0.0	-	-
			LOS	-	-	-	-	-	-	-	-	-	A	-	-
3: WIS-60 & Ridgeway Dr	1.1	A	Lane Configuration	0	<1	-	-	1>	0	-	-	-	1>	-	0
			Volume	20	340	-	-	365	20	-	-	-	20	-	35
			Delay (s)	8.2	0.0	-	-	-	-	-	-	-	13.3	-	-
			LOS	A	A	-	-	-	-	-	-	-	B	-	-
6: Eagle Dr & WIS-60	5.9	A	Lane Configuration	1	1>	0	1	1	1	0	<1>	0	1	1>	0
			Volume	50	240	70	20	260	40	50	30	10	60	30	75
			Delay (s)	8.1	-	-	8.0	-	-	-	24.9	-	21.6	13.5	-
			LOS	A	-	-	A	-	-	-	C	-	C	B	-

Weekday Morning Peak - Base Year Build

Intersection	Overall		By Approach	Eastbound			Westbound			Northbound			Southbound		
	Delay (s)	LOS		EBL	EBT	EBR	WBL	WBT	WBR	NBL	NBT	NBR	SBL	SBT	SBR
1: Jackson Dr & WIS-60	15.7	B	Lane Configuration	1	1>	0	0	<1>	0	1	1>	0	1	1>	0
			Volume	70	345	30	10	340	20	110	50	25	50	25	180
			Delay (s)	9.4	0.0	9.6	19.3	0.0	0.0	23.4	0.0	15.9	17.4	0.0	18.1
			LOS	A	A	A	B	A	A	C	A	B	B	A	B
2: WIS-60 & Dentist/Coffee Shop Driveway	0.2	A	Lane Configuration	0	1	-	-	1	0	-	-	-	1>	-	0
			Volume	10	410	-	-	370	5	-	-	-	5	-	0
			Delay (s)	8.2	-	-	-	-	-	-	-	-	16.6	-	-
			LOS	A	-	-	-	-	-	-	-	-	C	-	-
3: WIS-60 & Ridgeway Dr	3.6	A	Lane Configuration	0	<1>	0	0	<1>	0	0	<1>	0	0	<1>	0
			Volume	10	380	25	5	310	15	5	0	5	70	0	60
			Delay (s)	8.1	0.0	-	8.4	0.0	-	-	16.5	-	-	22.2	-
			LOS	A	A	-	A	A	-	-	C	-	-	C	-
6: Eagle Dr & WIS-60	6.8	A	Lane Configuration	1	1>	0	1	1	1	0	<1>	0	1	1>	0
			Volume	70	350	35	15	240	85	25	20	25	80	15	65
			Delay (s)	8.4	-	-	8.4	-	-	-	27.5	-	41.3	13.3	-
			LOS	A	-	-	A	-	-	-	D	-	E	B	-

Weekday Evening Peak - Base Year Build

Intersection	Overall		By Approach	Eastbound			Westbound			Northbound			Southbound		
	Delay (s)	LOS		EBL	EBT	EBR	WBL	WBT	WBR	NBL	NBT	NBR	SBL	SBT	SBR
1: Jackson Dr & WIS-60	14.7	B	Lane Configuration	1	1>	0	0	<1>	0	1	1>	0	1	1>	0
			Volume	175	405	120	15	330	55	70	75	15	40	60	105
			Delay (s)	8.3	0.0	9.3	18.9	0.0	0.0	24.4	0.0	18.8	20.6	0.0	20.4
			LOS	A	A	A	B	A	A	C	A	B	C	A	C
2: WIS-60 & Dentist/Coffee Shop Driveway	0.3	A	Lane Configuration	0	1	-	-	1	0	-	-	-	1>	-	0
			Volume	5	455	-	-	395	0	-	-	-	10	-	5
			Delay (s)	8.2	-	-	-	-	-	-	-	-	15.6	-	-
			LOS	A	-	-	-	-	-	-	-	-	C	-	-
3: WIS-60 & Ridgeway Dr	1.6	A	Lane Configuration	0	<1>	0	0	<1>	0	0	<1>	0	0	<1>	0
			Volume	50	410	5	0	370	45	15	0	5	20	0	10
			Delay (s)	8.5	0.0	-	0.0	-	-	-	22.3	-	-	21.6	-
			LOS	A	A	-	A	-	-	-	C	-	-	C	-
6: Eagle Dr & WIS-60	11.4	B	Lane Configuration	1	1>	0	1	1	1	0	<1>	0	1	1>	0
			Volume	55	280	100	35	310	80	50	40	20	55	35	55
			Delay (s)	8.5	-	-	8.4	-	-	-	69.5	-	46.6	19.7	-
			LOS	A	-	-	A	-	-	-	F	-	E	C	-

Saturday Midday Peak - Base Year Build

Intersection	Overall		By Approach	Eastbound			Westbound			Northbound			Southbound		
	Delay (s)	LOS		EBL	EBT	EBR	WBL	WBT	WBR	NBL	NBT	NBR	SBL	SBT	SBR
1: Jackson Dr & WIS-60	12.6	B	Lane Configuration	1	1>	0	0	<1>	0	1	1>	0	1	1>	0
			Volume	65	320	80	15	345	35	90	40	15	25	30	80
			Delay (s)	7.3	0.0	7.0	15.4	0.0	0.0	19.8	0.0	16.2	17.1	0.0	17.2
			LOS	A	A	A	B	A	A	B	A	B	B	A	B
2: WIS-60 & Dentist/Coffee Shop Driveway	0.0	A	Lane Configuration	0	1	-	-	1	0	-	-	-	1>	-	0
			Volume	0	360	-	-	395	0	-	-	-	0	-	0
			Delay (s)	-	-	-	-	-	-	-	-	-	0.0	-	-
			LOS	-	-	-	-	-	-	-	-	-	A	-	-
3: WIS-60 & Ridgeway Dr	1.2	A	Lane Configuration	0	<1>	0	0	<1>	0	0	<1>	0	0	<1>	0
			Volume	20	335	5	0	360	20	0	0	0	20	0	35
			Delay (s)	8.2	0.0	-	0.0	-	-	-	0.0	-	-	14.0	-
			LOS	A	A	-	A	-	-	-	A	-	-	B	-
6: Eagle Dr & WIS-60	5.6	A	Lane Configuration	1	1>	0	1	1	1	0	<1>	0	1	1>	0
			Volume	50	235	70	20	255	40	50	25	10	55	30	75
			Delay (s)	8.0	-	-	8.0	-	-	-	24.1	-	20.5	13.4	-
			LOS	A	-	-	A	-	-	-	C	-	C	B	-

Weekday Morning Peak - Interim Year Build

Intersection	Overall		By Approach	Eastbound			Westbound			Northbound			Southbound		
	Delay (s)	LOS		EBL	EBT	EBR	WBL	WBT	WBR	NBL	NBT	NBR	SBL	SBT	SBR
1: Jackson Dr & WIS-60	16.8	B	Lane Configuration	1	1>	0	0	<1>	0	1	1>	0	1	1>	0
			Volume	70	355	30	15	370	30	115	50	25	50	25	185
			Delay (s)	9.6	0.0	9.9	20.3	0.0	0.0	25.5	0.0	17.0	18.6	0.0	19.4
			LOS	A	A	A	C	A	A	C	A	B	B	A	B
2: WIS-60 & Dentist/Coffee Shop Driveway	0.2	A	Lane Configuration	0	<1	-	-	1>	0	-	-	-	1>	-	0
			Volume	10	420	-	-	415	5	-	-	-	5	-	0
			Delay (s)	8.3	0.0	-	-	-	-	-	-	-	17.6	-	-
			LOS	A	A	-	-	-	-	-	-	-	C	-	-
3: WIS-60 & Ridgeway Dr	4.6	A	Lane Configuration	0	<1>	0	0	<1>	0	0	<1>	0	0	<1>	0
			Volume	10	385	30	5	315	15	45	0	5	70	0	60
			Delay (s)	8.1	0.0	-	8.5	0.0	-	-	25.8	-	-	22.7	-
			LOS	A	A	-	A	A	-	-	D	-	-	C	-
6: Eagle Dr & WIS-60	7.6	A	Lane Configuration	1	1>	0	1	1	1	0	<1>	0	1	1>	0
			Volume	70	355	35	25	240	90	25	20	35	80	15	70
			Delay (s)	8.4	-	-	8.4	-	-	-	28.6	-	48.2	13.5	-
			LOS	A	-	-	A	-	-	-	D	-	E	B	-

Weekday Evening Peak - Interim Year Build

Intersection	Overall		By Approach	Eastbound			Westbound			Northbound			Southbound		
	Delay (s)	LOS		EBL	EBT	EBR	WBL	WBT	WBR	NBL	NBT	NBR	SBL	SBT	SBR
1: Jackson Dr & WIS-60	15.2	B	Lane Configuration	1	1>	0	0	<1>	0	1	1>	0	1	1>	0
			Volume	180	430	125	20	350	55	70	80	20	50	65	105
			Delay (s)	8.4	0.0	9.7	19.2	0.0	0.0	25.5	0.0	19.7	21.9	0.0	21.3
			LOS	A	A	A	B	A	A	C	A	B	C	A	C
2: WIS-60 & Dentist/Coffee Shop Driveway	0.3	A	Lane Configuration	0	<1	-	-	1>	0	-	-	-	1>	-	0
			Volume	5	495	-	-	420	0	-	-	-	10	-	5
			Delay (s)	8.3	0.0	-	-	-	-	-	-	-	16.6	-	-
			LOS	A	A	-	-	-	-	-	-	-	C	-	-
3: WIS-60 & Ridgeway Dr	2.2	A	Lane Configuration	0	<1>	0	0	<1>	0	0	<1>	0	0	<1>	0
			Volume	50	415	40	0	375	45	35	0	5	20	0	10
			Delay (s)	8.5	0.0	-	0.0	-	-	-	28.4	-	-	22.4	-
			LOS	A	A	-	A	-	-	-	D	-	-	C	-
6: Eagle Dr & WIS-60	13.1	B	Lane Configuration	1	1>	0	1	1	1	0	<1>	0	1	1>	0
			Volume	55	285	100	45	315	80	50	40	25	55	35	55
			Delay (s)	8.6	-	-	8.5	-	-	-	80.2	-	54.2	20.6	-
			LOS	A	-	-	A	-	-	-	F	-	F	C	-

Saturday Midday Peak - Interim Year Build

Intersection	Overall		By Approach	Eastbound			Westbound			Northbound			Southbound		
	Delay (s)	LOS		EBL	EBT	EBR	WBL	WBT	WBR	NBL	NBT	NBR	SBL	SBT	SBR
1: Jackson Dr & WIS-60	12.9	B	Lane Configuration	1	1>	0	0	<1>	0	1	1>	0	1	1>	0
			Volume	65	345	85	20	370	45	95	40	20	35	30	80
			Delay (s)	7.0	0.0	6.9	15.5	0.0	0.0	21.1	0.0	17.2	18.4	0.0	18.2
			LOS	A	A	A	B	A	A	C	A	B	B	A	B
2: WIS-60 & Dentist/Coffee Shop Driveway	0.0	A	Lane Configuration	0	<1	-	-	1>	0	-	-	-	1>	-	0
			Volume	0	400	-	-	435	0	-	-	-	0	-	0
			Delay (s)	0.0	-	-	-	-	-	-	-	-	0.0	-	-
			LOS	A	-	-	-	-	-	-	-	-	A	-	-
3: WIS-60 & Ridgeway Dr	1.9	A	Lane Configuration	0	<1>	0	0	<1>	0	0	<1>	0	0	<1>	0
			Volume	20	340	40	0	365	20	35	0	0	20	0	35
			Delay (s)	8.2	0.0	-	0.0	-	-	-	20.9	-	-	14.4	-
			LOS	A	A	-	A	-	-	-	C	-	-	B	-
6: Eagle Dr & WIS-60	6.0	A	Lane Configuration	1	1>	0	1	1	1	0	<1>	0	1	1>	0
			Volume	50	240	70	30	260	40	50	25	20	55	30	75
			Delay (s)	8.1	-	-	8.0	-	-	-	25.0	-	22.2	13.7	-
			LOS	A	-	-	A	-	-	-	D	-	C	B	-

Weekday Morning Peak - Horizon Year Build - Alt 1

Intersection	Overall		By Approach	Eastbound			Westbound			Northbound			Southbound		
	Delay (s)	LOS		EBL	EBT	EBR	WBL	WBT	WBR	NBL	NBT	NBR	SBL	SBT	SBR
1: Jackson Dr & WIS-60	19.9	B	Lane Configuration	1	1>	0	0	<1>	0	1	1>	0	1	1>	0
			Volume	70	480	30	40	455	45	115	55	60	85	25	185
			Delay (s)	9.5	0.0	11.6	23.5	0.0	0.0	32.0	0.0	22.1	25.8	0.0	24.3
			LOS	A	A	B	C	A	A	C	A	C	C	A	C
2: WIS-60 & Dentist/Coffee Shop Driveway	2.8	A	Lane Configuration	0	<1	-	-	1>	0	-	-	-	1>	-	0
			Volume	80	545	-	-	475	35	-	-	-	40	-	65
			Delay (s)	8.9	0.0	-	-	-	-	-	-	-	26.7	-	-
			LOS	A	A	-	-	-	-	-	-	-	D	-	-
3: WIS-60 & Ridgeway Dr	19.6	B	Lane Configuration	0	<1>	0	0	<1>	0	0	<1>	0	0	<1>	0
			Volume	10	430	145	40	340	15	110	0	30	75	0	60
			Delay (s)	8.2	0.0	-	9.3	0.0	-	-	124.5	-	-	49.9	-
			LOS	A	A	-	A	A	-	-	F	-	-	E	-
4: WIS-60 & Office Building Driveway	0.3	A	Lane Configuration	0	1	-	-	1	0	-	-	-	1>	-	0
			Volume	25	510	-	-	385	5	-	-	-	0	-	10
			Delay (s)	8.3	-	-	-	-	-	-	-	-	10.8	-	-
			LOS	A	-	-	-	-	-	-	-	-	B	-	-
5: Shopping Center Driveway & WIS-60	0.0	A	Lane Configuration	-	1	0	0	1	-	1>	-	0	-	-	-
			Volume	-	510	0	0	390	-	0	-	0	-	-	-
			Delay (s)	-	-	-	-	-	-	0.0	-	-	-	-	-
			LOS	-	-	-	-	-	-	A	-	-	-	-	-
6: Eagle Dr & WIS-60	12.8	B	Lane Configuration	1	1>	0	1	1	1	0	<1>	0	1	1>	0
			Volume	75	385	50	35	280	90	35	25	50	80	15	75
			Delay (s)	8.6	-	-	8.6	-	-	-	50.2	-	93.1	14.8	-
			LOS	A	-	-	A	-	-	-	F	-	F	B	-

Weekday Evening Peak - Horizon Year Build - Alt 1

Intersection	Overall		By Approach	Eastbound			Westbound			Northbound			Southbound		
	Delay (s)	LOS		EBL	EBT	EBR	WBL	WBT	WBR	NBL	NBT	NBR	SBL	SBT	SBR
1: Jackson Dr & WIS-60	20.7	C	Lane Configuration	1	1>	0	0	<1>	0	1	1>	0	1	1>	0
			Volume	180	565	125	50	490	100	75	80	55	85	65	105
			Delay (s)	8.2	0.0	11.6	26.5	0.0	0.0	35.9	0.0	28.4	33.8	0.0	29.6
			LOS	A	A	B	C	A	A	D	A	C	C	A	C
2: WIS-60 & Dentist/Coffee Shop Driveway	1.4	A	Lane Configuration	0	<1	-	-	1>	0	-	-	-	1>	-	0
			Volume	35	670	-	-	610	10	-	-	-	25	-	30
			Delay (s)	9.1	0.0	-	-	-	-	-	-	-	28.4	-	-
			LOS	A	A	-	-	-	-	-	-	-	D	-	-
3: WIS-60 & Ridgeway Dr	101.6	F	Lane Configuration	0	<1>	0	0	<1>	0	0	<1>	0	0	<1>	0
			Volume	50	450	195	40	420	45	190	0	60	20	0	10
			Delay (s)	8.7	0.0	-	9.4	0.0	-	-	593.1	-	-	44.0	-
			LOS	A	A	-	A	A	-	-	F	-	-	E	-
4: WIS-60 & Office Building Driveway	0.2	A	Lane Configuration	0	1	-	-	1	0	-	-	-	1>	-	0
			Volume	0	530	-	-	495	0	-	-	-	5	-	10
			Delay (s)	-	-	-	-	-	-	-	-	-	15.1	-	-
			LOS	-	-	-	-	-	-	-	-	-	C	-	-
5: Shopping Center Driveway & WIS-60	0.0	A	Lane Configuration	-	1	0	0	1	-	1>	-	0	-	-	-
			Volume	-	535	0	0	495	-	0	-	0	-	-	-
			Delay (s)	-	-	-	-	-	-	0.0	-	-	-	-	-
			LOS	-	-	-	-	-	-	A	-	-	-	-	-
6: Eagle Dr & WIS-60	123.4	F	Lane Configuration	1	1>	0	1	1	1	0	<1>	0	1	1>	0
			Volume	60	315	160	85	335	85	105	45	65	60	40	55
			Delay (s)	8.7	-	-	9.0	-	-	-	722.7	-	236.1	33.9	-
			LOS	A	-	-	A	-	-	-	F	-	F	D	-

Saturday Midday Peak - Horizon Year Build - Alt 1

Intersection	Overall		By Approach	Eastbound			Westbound			Northbound			Southbound		
	Delay (s)	LOS		EBL	EBT	EBR	WBL	WBT	WBR	NBL	NBT	NBR	SBL	SBT	SBR
1: Jackson Dr & WIS-60	16.1	B	Lane Configuration	1	1>	0	0	<1>	0	1	1>	0	1	1>	0
			Volume	65	525	85	60	510	80	95	45	60	75	35	80
			Delay (s)	6.2	0.0	7.7	18.3	0.0	0.0	29.7	0.0	25.0	28.5	0.0	25.4
			LOS	A	A	A	B	A	A	C	A	C	C	A	C
2: WIS-60 & Dentist/Coffee Shop Driveway	1.4	A	Lane Configuration	0	<1	-	-	1>	0	-	-	-	1>	-	0
			Volume	40	620	-	-	610	20	-	-	-	20	-	40
			Delay (s)	9.2	0.0	-	-	-	-	-	-	-	23.9	-	-
			LOS	A	A	-	-	-	-	-	-	-	C	-	-
3: WIS-60 & Ridgeway Dr	46.7	D	Lane Configuration	0	<1>	0	0	<1>	0	0	<1>	0	0	<1>	0
			Volume	20	395	225	55	410	20	185	0	45	20	0	35
			Delay (s)	8.3	0.0	-	9.2	0.0	-	-	278.3	-	-	21.6	-
			LOS	A	A	-	A	A	-	-	F	-	-	C	-
4: WIS-60 & Office Building Driveway	0.0	A	Lane Configuration	0	1	-	-	1	0	-	-	-	1>	-	0
			Volume	5	455	-	-	485	0	-	-	-	0	-	0
			Delay (s)	8.5	-	-	-	-	-	-	-	-	0.0	-	-
			LOS	A	-	-	-	-	-	-	-	-	A	-	-
5: Shopping Center Driveway & WIS-60	0.0	A	Lane Configuration	-	1	0	0	1	-	1>	-	0	-	-	-
			Volume	-	455	0	0	485	-	0	-	0	-	-	-
			Delay (s)	-	-	-	-	-	-	0.0	-	-	-	-	-
			LOS	-	-	-	-	-	-	A	-	-	-	-	-
6: Eagle Dr & WIS-60	29.6	C	Lane Configuration	1	1>	0	1	1	1	0	<1>	0	1	1>	0
			Volume	55	265	135	75	295	40	110	35	60	60	35	80
			Delay (s)	8.2	-	-	8.5	-	-	-	151.4	-	44.5	17.7	-
			LOS	A	-	-	A	-	-	-	F	-	E	C	-

Weekday Morning Peak - Horizon Year Build - Alt 2

Intersection	Overall		By Approach	Eastbound			Westbound			Northbound			Southbound		
	Delay (s)	LOS		EBL	EBT	EBR	WBL	WBT	WBR	NBL	NBT	NBR	SBL	SBT	SBR
1: Jackson Dr & WIS-60	19.9	B	Lane Configuration	1	1>	0	0	<1>	0	1	1>	0	1	1>	0
			Volume	70	480	30	40	455	45	115	55	60	85	25	185
			Delay (s)	9.5	0.0	11.6	23.5	0.0	0.0	32.0	0.0	22.1	25.8	0.0	24.3
			LOS	A	A	B	C	A	A	C	A	C	C	A	C
2: WIS-60 & Dentist/Coffee Shop Driveway	2.8	A	Lane Configuration	0	<1	-	-	1>	0	-	-	-	1>	-	0
			Volume	80	545	-	-	475	35	-	-	-	40	-	65
			Delay (s)	8.9	0.0	-	-	-	-	-	-	-	26.7	-	-
			LOS	A	A	-	-	-	-	-	-	-	D	-	-
3: WIS-60 & Ridgeway Dr	19.9	B	Lane Configuration	0	<1>	0	0	<1>	0	0	<1>	0	0	<1>	0
			Volume	10	435	140	40	340	15	110	0	30	75	0	60
			Delay (s)	8.2	0.0	-	9.3	0.0	-	-	126.6	-	-	50.4	-
			LOS	A	A	-	A	A	-	-	F	-	-	F	-
4: WIS-60 & Office Building Driveway	0.3	A	Lane Configuration	0	1	-	-	1	0	-	-	-	1>	-	0
			Volume	25	515	-	-	385	5	-	-	-	0	-	10
			Delay (s)	8.3	-	-	-	-	-	-	-	-	10.8	-	-
			LOS	A	-	-	-	-	-	-	-	-	B	-	-
5: Shopping Center Driveway & WIS-60	0.3	A	Lane Configuration	-	1	0	0	1	-	1>	-	0	-	-	-
			Volume	-	500	15	5	385	-	5	-	10	-	-	-
			Delay (s)	-	-	-	8.6	-	-	14.2	-	-	-	-	-
			LOS	-	-	-	A	-	-	B	-	-	-	-	-
6: Eagle Dr & WIS-60	10.1	B	Lane Configuration	1	1>	0	1	1	1	1	1>	0	1	1>	0
			Volume	75	395	40	30	285	90	30	25	40	80	15	75
			Delay (s)	8.6	-	-	8.6	-	-	48.2	22.0	-	85.4	14.8	-
			LOS	A	-	-	A	-	-	E	C	-	F	B	-

Weekday Evening Peak - Horizon Year Build - Alt 2

Intersection	Overall		By Approach	Eastbound			Westbound			Northbound			Southbound		
	Delay (s)	LOS		EBL	EBT	EBR	WBL	WBT	WBR	NBL	NBT	NBR	SBL	SBT	SBR
1: Jackson Dr & WIS-60	20.7	C	Lane Configuration	1	1>	0	0	<1>	0	1	1>	0	1	1>	0
			Volume	180	565	125	50	490	100	75	80	55	85	65	105
			Delay (s)	8.2	0.0	11.6	26.5	0.0	0.0	35.9	0.0	28.4	33.8	0.0	29.6
			LOS	A	A	B	C	A	A	D	A	C	C	A	C
2: WIS-60 & Dentist/Coffee Shop Driveway	1.4	A	Lane Configuration	0	<1	-	-	1>	0	-	-	-	1>	-	0
			Volume	35	670	-	-	610	10	-	-	-	25	-	30
			Delay (s)	9.1	0.0	-	-	-	-	-	-	-	28.4	-	-
			LOS	A	A	-	-	-	-	-	-	-	D	-	-
3: WIS-60 & Ridgeway Dr	99.0	F	Lane Configuration	0	<1>	0	0	<1>	0	0	<1>	0	0	<1>	0
			Volume	50	455	190	40	425	45	185	0	60	20	0	10
			Delay (s)	8.7	0.0	-	9.4	0.0	-	-	589.3	-	-	44.4	-
			LOS	A	A	-	A	A	-	-	F	-	-	E	-
4: WIS-60 & Office Building Driveway	0.2	A	Lane Configuration	0	1	-	-	1	0	-	-	-	1>	-	0
			Volume	0	535	-	-	500	0	-	-	-	5	-	10
			Delay (s)	-	-	-	-	-	-	-	-	-	15.2	-	-
			LOS	-	-	-	-	-	-	-	-	-	C	-	-
5: Shopping Center Driveway & WIS-60	1.3	A	Lane Configuration	-	1	0	0	1	-	1>	-	0	-	-	-
			Volume	-	505	35	20	465	-	35	-	25	-	-	-
			Delay (s)	-	-	-	8.8	-	-	20.8	-	-	-	-	-
			LOS	-	-	-	A	-	-	C	-	-	-	-	-
6: Eagle Dr & WIS-60	28.2	C	Lane Configuration	1	1>	0	1	1	1	1	1>	0	1	1>	0
			Volume	60	340	130	65	355	85	75	45	40	60	40	55
			Delay (s)	8.8	-	-	8.9	-	-	272.0	38.7	-	172.8	31.3	-
			LOS	A	-	-	A	-	-	F	E	-	F	D	-

Saturday Midday Peak - Horizon Year Build - Alt 2

Intersection	Overall		By Approach	Eastbound			Westbound			Northbound			Southbound		
	Delay (s)	LOS		EBL	EBT	EBR	WBL	WBT	WBR	NBL	NBT	NBR	SBL	SBT	SBR
1: Jackson Dr & WIS-60	16.1	B	Lane Configuration	1	1>	0	0	<1>	0	1	1>	0	1	1>	0
			Volume	65	525	85	60	510	80	95	45	60	75	35	80
			Delay (s)	6.2	0.0	7.7	18.3	0.0	0.0	29.7	0.0	25.0	28.5	0.0	25.4
			LOS	A	A	A	B	A	A	C	A	C	C	A	C
2: WIS-60 & Dentist/Coffee Shop Driveway	1.4	A	Lane Configuration	0	<1	-	-	1>	0	-	-	-	1>	-	0
			Volume	40	620	-	-	610	20	-	-	-	20	-	40
			Delay (s)	9.2	0.0	-	-	-	-	-	-	-	23.9	-	-
			LOS	A	A	-	-	-	-	-	-	-	C	-	-
3: WIS-60 & Ridgeway Dr	42.6	D	Lane Configuration	0	<1>	0	0	<1>	0	0	<1>	0	0	<1>	0
			Volume	20	410	210	55	420	20	175	0	45	20	0	35
			Delay (s)	8.4	0.0	-	9.2	0.0	-	-	264.4	-	-	22.1	-
			LOS	A	A	-	A	A	-	-	F	-	-	C	-
4: WIS-60 & Office Building Driveway	0.0	A	Lane Configuration	0	1	-	-	1	0	-	-	-	1>	-	0
			Volume	5	470	-	-	495	0	-	-	-	0	-	0
			Delay (s)	8.5	-	-	-	-	-	-	-	-	0.0	-	-
			LOS	A	-	-	-	-	-	-	-	-	A	-	-
5: Shopping Center Driveway & WIS-60	1.5	A	Lane Configuration	-	1	0	0	1	-	1>	-	0	-	-	-
			Volume	-	415	55	20	450	-	45	-	20	-	-	-
			Delay (s)	-	-	-	8.5	-	-	20.0	-	-	-	-	-
			LOS	-	-	-	A	-	-	C	-	-	-	-	-
6: Eagle Dr & WIS-60	9.1	A	Lane Configuration	1	1>	0	1	1	1	1	1>	0	1	1>	0
			Volume	55	285	95	55	315	40	75	35	40	60	35	80
			Delay (s)	8.2	-	-	8.3	-	-	55.1	18.5	-	38.5	17.0	-
			LOS	A	-	-	A	-	-	F	C	-	E	C	-

Weekday Morning Peak - Base Year Background - Improved

Intersection	Overall		By Approach	Eastbound			Westbound			Northbound			Southbound		
	Delay (s)	LOS		EBL	EBT	EBR	WBL	WBT	WBR	NBL	NBT	NBR	SBL	SBT	SBR
1: Jackson Dr & WIS-60	15.7	B	Lane Configuration	1	1>	0	0	<1>	0	1	1>	0	1	1>	0
			Volume	70	330	30	10	335	20	110	50	20	45	25	180
			Delay (s)	9.5	0.0	9.4	19.2	0.0	0.0	23.3	0.0	15.7	17.0	0.0	18.0
			LOS	A	A	A	B	A	A	C	A	B	B	A	B
2: WIS-60 & Dentist/Coffee Shop Driveway	0.2	A	Lane Configuration	0	1	-	-	1	0	-	-	-	1>	-	0
			Volume	10	385	-	-	365	5	-	-	-	5	-	0
			Delay (s)	8.2	-	-	-	-	-	-	-	-	16.1	-	-
			LOS	A	-	-	-	-	-	-	-	-	C	-	-
3: WIS-60 & Ridgeway Dr	2.9	A	Lane Configuration	0	<1	-	-	1>	0	-	-	-	1>	-	0
			Volume	10	380	-	-	310	15	-	-	-	70	-	60
			Delay (s)	8.1	0.0	-	-	-	-	-	-	-	18.1	-	-
			LOS	A	A	-	-	-	-	-	-	-	C	-	-
6: Eagle Dr & WIS-60	6.0	A	Lane Configuration	1	1>	0	1	1	1	0	<1>	0	1	1>	0
			Volume	70	345	35	15	235	85	25	20	25	80	15	65
			Delay (s)	5.8	0.0	5.8	6.9	4.7	4.1	8.3	0.0	0.0	8.3	0.0	8.9
			LOS	A	A	A	A	A	A	A	A	A	A	A	A

Weekday Evening Peak - Base Year Background - Improved

Intersection	Overall		By Approach	Eastbound			Westbound			Northbound			Southbound		
	Delay (s)	LOS		EBL	EBT	EBR	WBL	WBT	WBR	NBL	NBT	NBR	SBL	SBT	SBR
1: Jackson Dr & WIS-60	14.5	B	Lane Configuration	1	1>	0	0	<1>	0	1	1>	0	1	1>	0
			Volume	175	400	120	15	320	50	70	75	15	40	60	105
			Delay (s)	8.4	0.0	9.2	18.7	0.0	0.0	23.9	0.0	18.4	20.2	0.0	20.0
			LOS	A	A	A	B	A	A	C	A	B	C	A	C
2: WIS-60 & Dentist/Coffee Shop Driveway	0.3	A	Lane Configuration	0	1	-	-	1	0	-	-	-	1>	-	0
			Volume	5	450	-	-	380	0	-	-	-	10	-	5
			Delay (s)	8.2	-	-	-	-	-	-	-	-	15.3	-	-
			LOS	A	-	-	-	-	-	-	-	-	C	-	-
3: WIS-60 & Ridgeway Dr	1.1	A	Lane Configuration	0	<1	-	-	1>	0	-	-	-	1>	-	0
			Volume	50	410	-	-	370	45	-	-	-	20	-	10
			Delay (s)	8.5	0.0	-	-	-	-	-	-	-	18.6	-	-
			LOS	A	A	-	-	-	-	-	-	-	C	-	-
6: Eagle Dr & WIS-60	6.3	A	Lane Configuration	1	1>	0	1	1	1	0	<1>	0	1	1>	0
			Volume	55	275	100	35	310	80	50	40	20	55	35	55
			Delay (s)	6.6	0.0	5.9	7.3	5.2	4.2	9.0	0.0	0.0	8.1	0.0	8.9
			LOS	A	A	A	A	A	A	A	A	A	A	A	A

Saturday Midday Peak - Base Year Background - Improved

Intersection	Overall		By Approach	Eastbound			Westbound			Northbound			Southbound		
	Delay (s)	LOS		EBL	EBT	EBR	WBL	WBT	WBR	NBL	NBT	NBR	SBL	SBT	SBR
1: Jackson Dr & WIS-60	12.6	B	Lane Configuration	1	1>	0	0	<1>	0	1	1>	0	1	1>	0
			Volume	65	315	80	15	345	35	90	40	15	25	30	80
			Delay (s)	7.3	0.0	6.9	15.4	0.0	0.0	19.8	0.0	16.2	17.1	0.0	17.2
			LOS	A	A	A	B	A	A	B	A	B	B	A	B
2: WIS-60 & Dentist/Coffee Shop Driveway	0.0	A	Lane Configuration	0	1	-	-	1	0	-	-	-	1>	-	0
			Volume	0	355	-	-	395	0	-	-	-	0	-	0
			Delay (s)	-	-	-	-	-	-	-	-	-	0.0	-	-
			LOS	-	-	-	-	-	-	-	-	-	A	-	-
3: WIS-60 & Ridgeway Dr	1.1	A	Lane Configuration	0	<1	-	-	1>	0	-	-	-	1>	-	0
			Volume	20	335	-	-	360	20	-	-	-	20	-	35
			Delay (s)	8.2	0.0	-	-	-	-	-	-	-	13.2	-	-
			LOS	A	A	-	-	-	-	-	-	-	B	-	-
6: Eagle Dr & WIS-60	6.0	A	Lane Configuration	1	1>	0	1	1	1	0	<1>	0	1	1>	0
			Volume	50	235	70	20	255	40	50	25	10	55	30	75
			Delay (s)	6.0	0.0	5.7	6.3	5.2	4.3	7.3	0.0	0.0	6.9	0.0	7.7
			LOS	A	A	A	A	A	A	A	A	A	A	A	A

Weekday Morning Peak - Interim Year Background - Improved

Intersection	Overall		By Approach	Eastbound			Westbound			Northbound			Southbound		
	Delay (s)	LOS		EBL	EBT	EBR	WBL	WBT	WBR	NBL	NBT	NBR	SBL	SBT	SBR
1: Jackson Dr & WIS-60	16.0	B	Lane Configuration	1	1>	0	0	<1>	0	1	1>	0	1	1>	0
			Volume	70	335	30	10	340	20	115	50	20	45	25	185
			Delay (s)	9.7	0.0	9.8	19.6	0.0	0.0	23.7	0.0	15.7	17.1	0.0	18.1
			LOS	A	A	A	B	A	A	C	A	B	B	A	B
2: WIS-60 & Dentist/Coffee Shop Driveway	0.2	A	Lane Configuration	0	1	-	-	1	0	-	-	-	1>	-	0
			Volume	10	390	-	-	370	5	-	-	-	5	-	0
			Delay (s)	8.2	-	-	-	-	-	-	-	-	16.2	-	-
			LOS	A	-	-	-	-	-	-	-	-	C	-	-
3: WIS-60 & Ridgeway Dr	2.9	A	Lane Configuration	0	<1	-	-	1>	0	-	-	-	1>	-	0
			Volume	10	385	-	-	315	15	-	-	-	70	-	60
			Delay (s)	8.1	0.0	-	-	-	-	-	-	-	18.4	-	-
			LOS	A	A	-	-	-	-	-	-	-	C	-	-
6: Eagle Dr & WIS-60	6.1	A	Lane Configuration	1	1>	0	1	1	1	0	<1>	0	1	1>	0
			Volume	70	350	35	15	235	90	25	20	25	80	15	70
			Delay (s)	5.8	0.0	5.8	7.0	4.7	4.1	8.3	0.0	0.0	8.3	0.0	9.0
			LOS	A	A	A	A	A	A	A	A	A	A	A	A

Weekday Evening Peak - Interim Year Background - Improved

Intersection	Overall		By Approach	Eastbound			Westbound			Northbound			Southbound		
	Delay (s)	LOS		EBL	EBT	EBR	WBL	WBT	WBR	NBL	NBT	NBR	SBL	SBT	SBR
1: Jackson Dr & WIS-60	14.7	B	Lane Configuration	1	1>	0	0	<1>	0	1	1>	0	1	1>	0
			Volume	180	405	125	15	325	50	70	80	15	40	65	105
			Delay (s)	8.5	0.0	9.5	18.9	0.0	0.0	24.2	0.0	18.6	20.4	0.0	20.2
			LOS	A	A	A	B	A	A	C	A	B	C	A	C
2: WIS-60 & Dentist/Coffee Shop Driveway	0.3	A	Lane Configuration	0	1	-	-	1	0	-	-	-	1>	-	0
			Volume	5	455	-	-	385	0	-	-	-	10	-	5
			Delay (s)	8.2	-	-	-	-	-	-	-	-	15.4	-	-
			LOS	A	-	-	-	-	-	-	-	-	C	-	-
3: WIS-60 & Ridgeway Dr	1.1	A	Lane Configuration	0	<1	-	-	1>	0	-	-	-	1>	-	0
			Volume	50	415	-	-	375	45	-	-	-	20	-	10
			Delay (s)	8.5	0.0	-	-	-	-	-	-	-	18.9	-	-
			LOS	A	A	-	-	-	-	-	-	-	C	-	-
6: Eagle Dr & WIS-60	6.3	A	Lane Configuration	1	1>	0	1	1	1	0	<1>	0	1	1>	0
			Volume	55	280	100	35	315	80	50	40	20	55	35	55
			Delay (s)	6.6	0.0	5.9	7.3	5.2	4.2	9.1	0.0	0.0	8.2	0.0	9.0
			LOS	A	A	A	A	A	A	A	A	A	A	A	A

Saturday Midday Peak - Interim Year Background - Improved

Intersection	Overall		By Approach	Eastbound			Westbound			Northbound			Southbound		
	Delay (s)	LOS		EBL	EBT	EBR	WBL	WBT	WBR	NBL	NBT	NBR	SBL	SBT	SBR
1: Jackson Dr & WIS-60	12.7	B	Lane Configuration	1	1>	0	0	<1>	0	1	1>	0	1	1>	0
			Volume	65	320	85	15	350	35	95	40	15	25	30	80
			Delay (s)	7.3	0.0	7.0	15.5	0.0	0.0	20.1	0.0	16.3	17.2	0.0	17.3
			LOS	A	A	A	B	A	A	C	A	B	B	A	B
2: WIS-60 & Dentist/Coffee Shop Driveway	0.0	A	Lane Configuration	0	1	-	-	1	0	-	-	-	1>	-	0
			Volume	0	360	-	-	400	0	-	-	-	0	-	0
			Delay (s)	-	-	-	-	-	-	-	-	-	0.0	-	-
			LOS	-	-	-	-	-	-	-	-	-	A	-	-
3: WIS-60 & Ridgeway Dr	1.1	A	Lane Configuration	0	<1	-	-	1>	0	-	-	-	1>	-	0
			Volume	20	340	-	-	365	20	-	-	-	20	-	35
			Delay (s)	8.2	0.0	-	-	-	-	-	-	-	13.3	-	-
			LOS	A	A	-	-	-	-	-	-	-	B	-	-
6: Eagle Dr & WIS-60	6.0	A	Lane Configuration	1	1>	0	1	1	1	0	<1>	0	1	1>	0
			Volume	50	240	70	20	260	40	50	25	10	55	30	75
			Delay (s)	6.1	0.0	5.7	6.4	5.2	4.3	7.3	0.0	0.0	6.9	0.0	7.8
			LOS	A	A	A	A	A	A	A	A	A	A	A	A

Weekday Morning Peak - Horizon Year Background - Improved

Intersection	Overall		By Approach	Eastbound			Westbound			Northbound			Southbound		
	Delay (s)	LOS		EBL	EBT	EBR	WBL	WBT	WBR	NBL	NBT	NBR	SBL	SBT	SBR
1: Jackson Dr & WIS-60	16.0	B	Lane Configuration	1	1>	0	0	<1>	0	1	1>	0	1	1>	0
			Volume	70	335	30	10	340	20	115	55	20	45	25	185
			Delay (s)	9.7	0.0	9.8	19.6	0.0	0.0	23.7	0.0	15.8	17.2	0.0	18.1
			LOS	A	A	A	B	A	A	C	A	B	B	A	B
2: WIS-60 & Dentist/Coffee Shop Driveway	0.2	A	Lane Configuration	0	1	-	-	1	0	-	-	-	1>	-	0
			Volume	10	390	-	-	370	5	-	-	-	5	-	0
			Delay (s)	8.2	-	-	-	-	-	-	-	-	16.2	-	-
			LOS	A	-	-	-	-	-	-	-	-	C	-	-
3: WIS-60 & Ridgeway Dr	3.1	A	Lane Configuration	0	<1	-	-	1>	0	-	-	-	1>	-	0
			Volume	10	385	-	-	315	15	-	-	-	75	-	60
			Delay (s)	8.1	0.0	-	-	-	-	-	-	-	19.0	-	-
			LOS	A	A	-	-	-	-	-	-	-	C	-	-
6: Eagle Dr & WIS-60	6.1	A	Lane Configuration	1	1>	0	1	1	1	0	<1>	0	1	1>	0
			Volume	75	350	35	15	235	90	25	20	25	80	15	70
			Delay (s)	5.9	0.0	5.8	7.0	4.7	4.1	8.4	0.0	0.0	8.4	0.0	9.0
			LOS	A	A	A	A	A	A	A	A	A	A	A	A

Weekday Evening Peak - Horizon Year Background - Improved

Intersection	Overall		By Approach	Eastbound			Westbound			Northbound			Southbound		
	Delay (s)	LOS		EBL	EBT	EBR	WBL	WBT	WBR	NBL	NBT	NBR	SBL	SBT	SBR
1: Jackson Dr & WIS-60	14.8	B	Lane Configuration	1	1>	0	0	<1>	0	1	1>	0	1	1>	0
			Volume	180	410	125	15	325	50	75	80	15	40	65	105
			Delay (s)	8.6	0.0	9.7	19.1	0.0	0.0	24.3	0.0	18.5	20.4	0.0	20.1
			LOS	A	A	A	B	A	A	C	A	B	C	A	C
2: WIS-60 & Dentist/Coffee Shop Driveway	0.3	A	Lane Configuration	0	1	-	-	1	0	-	-	-	1>	-	0
			Volume	5	460	-	-	385	0	-	-	-	10	-	5
			Delay (s)	8.2	-	-	-	-	-	-	-	-	15.5	-	-
			LOS	A	-	-	-	-	-	-	-	-	C	-	-
3: WIS-60 & Ridgeway Dr	1.1	A	Lane Configuration	0	<1	-	-	1>	0	-	-	-	1>	-	0
			Volume	50	420	-	-	375	45	-	-	-	20	-	10
			Delay (s)	8.5	0.0	-	-	-	-	-	-	-	19.0	-	-
			LOS	A	A	-	-	-	-	-	-	-	C	-	-
6: Eagle Dr & WIS-60	6.4	A	Lane Configuration	1	1>	0	1	1	1	0	<1>	0	1	1>	0
			Volume	55	280	105	35	315	85	50	45	20	60	35	55
			Delay (s)	6.6	0.0	6.0	7.5	5.3	4.2	9.1	0.0	0.0	8.3	0.0	9.0
			LOS	A	A	A	A	A	A	A	A	A	A	A	A

Saturday Midday Peak - Horizon Year Background - Improved

Intersection	Overall		By Approach	Eastbound			Westbound			Northbound			Southbound		
	Delay (s)	LOS		EBL	EBT	EBR	WBL	WBT	WBR	NBL	NBT	NBR	SBL	SBT	SBR
1: Jackson Dr & WIS-60	12.7	B	Lane Configuration	1	1>	0	0	<1>	0	1	1>	0	1	1>	0
			Volume	65	320	85	15	350	35	95	45	15	25	35	80
			Delay (s)	7.3	0.0	7.0	15.5	0.0	0.0	20.2	0.0	16.4	17.3	0.0	17.3
			LOS	A	A	A	B	A	A	C	A	B	B	A	B
2: WIS-60 & Dentist/Coffee Shop Driveway	0.0	A	Lane Configuration	0	1	-	-	1	0	-	-	-	1>	-	0
			Volume	0	360	-	-	400	0	-	-	-	0	-	0
			Delay (s)	-	-	-	-	-	-	-	-	-	0.0	-	-
			LOS	-	-	-	-	-	-	-	-	-	A	-	-
3: WIS-60 & Ridgeway Dr	1.1	A	Lane Configuration	0	<1	-	-	1>	0	-	-	-	1>	-	0
			Volume	20	340	-	-	365	20	-	-	-	20	-	35
			Delay (s)	8.2	0.0	-	-	-	-	-	-	-	13.3	-	-
			LOS	A	A	-	-	-	-	-	-	-	B	-	-
6: Eagle Dr & WIS-60	6.0	A	Lane Configuration	1	1>	0	1	1	1	0	<1>	0	1	1>	0
			Volume	50	240	70	20	260	40	50	30	10	60	30	75
			Delay (s)	6.1	0.0	5.7	6.4	5.3	4.3	7.3	0.0	0.0	6.9	0.0	7.8
			LOS	A	A	A	A	A	A	A	A	A	A	A	A

Weekday Morning Peak - Base Build - Improved

Intersection	Overall		By Approach	Eastbound			Westbound			Northbound			Southbound		
	Delay (s)	LOS		EBL	EBT	EBR	WBL	WBT	WBR	NBL	NBT	NBR	SBL	SBT	SBR
1: Jackson Dr & WIS-60	15.7	B	Lane Configuration	1	1>	0	0	<1>	0	1	1>	0	1	1>	0
			Volume	70	345	30	10	340	20	110	50	25	50	25	180
			Delay (s)	9.4	0.0	9.6	19.3	0.0	0.0	23.4	0.0	15.9	17.4	0.0	18.1
			LOS	A	A	A	B	A	A	C	A	B	B	A	B
2: WIS-60 & Dentist/Coffee Shop Driveway	0.2	A	Lane Configuration	0	1	-	-	1	0	-	-	-	1>	-	0
			Volume	10	410	-	-	370	5	-	-	-	5	-	0
			Delay (s)	8.2	-	-	-	-	-	-	-	-	16.6	-	-
			LOS	A	-	-	-	-	-	-	-	-	C	-	-
3: WIS-60 & Ridgeway Dr	3.6	A	Lane Configuration	0	<1>	0	0	<1>	0	0	<1>	0	0	<1>	0
			Volume	10	380	25	5	310	15	5	0	5	70	0	60
			Delay (s)	8.1	0.0	-	8.4	0.0	-	-	16.5	-	-	22.2	-
			LOS	A	A	-	A	A	-	-	C	-	-	C	-
6: Eagle Dr & WIS-60	6.0	A	Lane Configuration	1	1>	0	1	1	1	0	<1>	0	1	1>	0
			Volume	70	350	35	15	240	85	25	20	25	80	15	65
			Delay (s)	5.8	0.0	5.8	7.0	4.7	4.1	8.3	0.0	0.0	8.3	0.0	8.9
			LOS	A	A	A	A	A	A	A	A	A	A	A	A

Weekday Evening Peak - Base Build - Improved

Intersection	Overall		By Approach	Eastbound			Westbound			Northbound			Southbound		
	Delay (s)	LOS		EBL	EBT	EBR	WBL	WBT	WBR	NBL	NBT	NBR	SBL	SBT	SBR
1: Jackson Dr & WIS-60	14.7	B	Lane Configuration	1	1>	0	0	<1>	0	1	1>	0	1	1>	0
			Volume	175	405	120	15	330	55	70	75	15	40	60	105
			Delay (s)	8.3	0.0	9.3	18.9	0.0	0.0	24.4	0.0	18.8	20.6	0.0	20.4
			LOS	A	A	A	B	A	A	C	A	B	C	A	C
2: WIS-60 & Dentist/Coffee Shop Driveway	0.3	A	Lane Configuration	0	1	-	-	1	0	-	-	-	1>	-	0
			Volume	5	455	-	-	395	0	-	-	-	10	-	5
			Delay (s)	8.2	-	-	-	-	-	-	-	-	15.6	-	-
			LOS	A	-	-	-	-	-	-	-	-	C	-	-
3: WIS-60 & Ridgeway Dr	1.6	A	Lane Configuration	0	<1>	0	0	<1>	0	0	<1>	0	0	<1>	0
			Volume	50	410	5	0	370	45	15	0	5	20	0	10
			Delay (s)	8.5	0.0	-	0.0	-	-	-	22.3	-	-	21.6	-
			LOS	A	A	-	A	-	-	-	C	-	-	C	-
6: Eagle Dr & WIS-60	6.3	A	Lane Configuration	1	1>	0	1	1	1	0	<1>	0	1	1>	0
			Volume	55	280	100	35	310	80	50	40	20	55	35	55
			Delay (s)	6.6	0.0	5.9	7.4	5.2	4.2	9.1	0.0	0.0	8.2	0.0	9.0
			LOS	A	A	A	A	A	A	A	A	A	A	A	A

Saturday Midday Peak - Base Build - Improved

Intersection	Overall		By Approach	Eastbound			Westbound			Northbound			Southbound		
	Delay (s)	LOS		EBL	EBT	EBR	WBL	WBT	WBR	NBL	NBT	NBR	SBL	SBT	SBR
1: Jackson Dr & WIS-60	12.6	B	Lane Configuration	1	1>	0	0	<1>	0	1	1>	0	1	1>	0
			Volume	65	320	80	15	345	35	90	40	15	25	30	80
			Delay (s)	7.3	0.0	7.0	15.4	0.0	0.0	19.8	0.0	16.2	17.1	0.0	17.2
			LOS	A	A	A	B	A	A	B	A	B	B	A	B
2: WIS-60 & Dentist/Coffee Shop Driveway	0.0	A	Lane Configuration	0	1	-	-	1	0	-	-	-	1>	-	0
			Volume	0	360	-	-	395	0	-	-	-	0	-	0
			Delay (s)	-	-	-	-	-	-	-	-	-	0.0	-	-
			LOS	-	-	-	-	-	-	-	-	-	A	-	-
3: WIS-60 & Ridgeway Dr	1.2	A	Lane Configuration	0	<1>	0	0	<1>	0	0	<1>	0	0	<1>	0
			Volume	20	335	5	0	360	20	0	0	0	20	0	35
			Delay (s)	8.2	0.0	-	0.0	-	-	-	0.0	-	-	14.0	-
			LOS	A	A	-	A	-	-	-	A	-	-	B	-
6: Eagle Dr & WIS-60	6.0	A	Lane Configuration	1	1>	0	1	1	1	0	<1>	0	1	1>	0
			Volume	50	235	70	20	255	40	50	25	10	55	30	75
			Delay (s)	6.0	0.0	5.7	6.3	5.2	4.3	7.3	0.0	0.0	6.9	0.0	7.7
			LOS	A	A	A	A	A	A	A	A	A	A	A	A

Weekday Morning Peak - Interim Year Build - Improved

Intersection	Overall		By Approach	Eastbound			Westbound			Northbound			Southbound		
	Delay (s)	LOS		EBL	EBT	EBR	WBL	WBT	WBR	NBL	NBT	NBR	SBL	SBT	SBR
1: Jackson Dr & WIS-60	16.8	B	Lane Configuration	1	1>	0	0	<1>	0	1	1>	0	1	1>	0
			Volume	70	355	30	15	370	30	115	50	25	50	25	185
			Delay (s)	9.6	0.0	9.9	20.3	0.0	0.0	25.5	0.0	17.0	18.6	0.0	19.4
			LOS	A	A	A	C	A	A	C	A	B	B	A	B
2: WIS-60 & Dentist/Coffee Shop Driveway	0.2	A	Lane Configuration	0	<1	-	-	1>	0	-	-	-	1>	-	0
			Volume	10	420	-	-	415	5	-	-	-	5	-	0
			Delay (s)	8.3	0.0	-	-	-	-	-	-	-	17.6	-	-
			LOS	A	A	-	-	-	-	-	-	-	C	-	-
3: WIS-60 & Ridgeway Dr	6.1	A	Lane Configuration	1	1>	0	1	1>	0	0	<1>	0	0	<1>	0
			Volume	10	385	30	5	315	15	45	0	5	70	0	60
			Delay (s)	5.9	0.0	5.7	6.8	0.0	5.0	8.3	0.0	0.0	9.1	0.0	0.0
			LOS	A	A	A	A	A	A	A	A	A	A	A	A
6: Eagle Dr & WIS-60	6.1	A	Lane Configuration	1	1>	0	1	1	1	0	<1>	0	1	1>	0
			Volume	70	355	35	25	240	90	25	20	35	80	15	70
			Delay (s)	5.9	0.0	5.9	7.2	4.7	4.1	8.5	0.0	0.0	8.4	0.0	9.1
			LOS	A	A	A	A	A	A	A	A	A	A	A	A

Weekday Evening Peak - Interim Year Build - Improved

Intersection	Overall		By Approach	Eastbound			Westbound			Northbound			Southbound		
	Delay (s)	LOS		EBL	EBT	EBR	WBL	WBT	WBR	NBL	NBT	NBR	SBL	SBT	SBR
1: Jackson Dr & WIS-60	15.2	B	Lane Configuration	1	1>	0	0	<1>	0	1	1>	0	1	1>	0
			Volume	180	430	125	20	350	55	70	80	20	50	65	105
			Delay (s)	8.4	0.0	9.7	19.2	0.0	0.0	25.5	0.0	19.7	21.9	0.0	21.3
			LOS	A	A	A	B	A	A	C	A	B	C	A	C
2: WIS-60 & Dentist/Coffee Shop Driveway	0.3	A	Lane Configuration	0	<1	-	-	1>	0	-	-	-	1>	-	0
			Volume	5	495	-	-	420	0	-	-	-	10	-	5
			Delay (s)	8.3	0.0	-	-	-	-	-	-	-	16.6	-	-
			LOS	A	A	-	-	-	-	-	-	-	C	-	-
3: WIS-60 & Ridgeway Dr	13.7	B	Lane Configuration	1	1>	0	1	1>	0	0	<1>	0	0	<1>	0
			Volume	50	415	40	0	375	45	35	0	5	20	0	10
			Delay (s)	18.3	0.0	14.2	0.0	0.0	13.5	8.3	0.0	0.0	8.2	0.0	0.0
			LOS	B	A	B	A	A	B	A	A	A	A	A	A
6: Eagle Dr & WIS-60	6.6	A	Lane Configuration	1	1>	0	1	1	1	0	<1>	0	1	1>	0
			Volume	55	285	100	45	315	80	50	40	25	55	35	55
			Delay (s)	7.0	0.0	6.3	8.0	5.5	4.4	8.7	0.0	0.0	8.0	0.0	8.7
			LOS	A	A	A	A	A	A	A	A	A	A	A	A

Saturday Midday Peak - Interim Year Build - Improved

Intersection	Overall		By Approach	Eastbound			Westbound			Northbound			Southbound		
	Delay (s)	LOS		EBL	EBT	EBR	WBL	WBT	WBR	NBL	NBT	NBR	SBL	SBT	SBR
1: Jackson Dr & WIS-60	12.9	B	Lane Configuration	1	1>	0	0	<1>	0	1	1>	0	1	1>	0
			Volume	65	345	85	20	370	45	95	40	20	35	30	80
			Delay (s)	7.0	0.0	6.9	15.5	0.0	0.0	21.1	0.0	17.2	18.4	0.0	18.2
			LOS	A	A	A	B	A	A	C	A	B	B	A	B
2: WIS-60 & Dentist/Coffee Shop Driveway	0.0	A	Lane Configuration	0	<1	-	-	1>	0	-	-	-	1>	-	0
			Volume	0	400	-	-	435	0	-	-	-	0	-	0
			Delay (s)	0.0	-	-	-	-	-	-	-	-	0.0	-	-
			LOS	A	-	-	-	-	-	-	-	-	A	-	-
3: WIS-60 & Ridgeway Dr	13.7	B	Lane Configuration	1	1>	0	1	1>	0	0	<1>	0	0	<1>	0
			Volume	20	340	40	0	365	20	35	0	0	20	0	35
			Delay (s)	17.1	0.0	14.5	0.0	0.0	14.4	6.2	0.0	0.0	6.4	0.0	0.0
			LOS	B	A	B	A	A	B	A	A	A	A	A	A
6: Eagle Dr & WIS-60	6.4	A	Lane Configuration	1	1>	0	1	1	1	0	<1>	0	1	1>	0
			Volume	50	240	70	30	260	40	50	25	20	55	30	75
			Delay (s)	6.9	0.0	6.5	7.3	6.0	4.8	6.7	0.0	0.0	6.4	0.0	7.0
			LOS	A	A	A	A	A	A	A	A	A	A	A	A

Weekday Morning Peak - Horizon Year Build - Alt 1 - Improved

Intersection	Overall		By Approach	Eastbound			Westbound			Northbound			Southbound		
	Delay (s)	LOS		EBL	EBT	EBR	WBL	WBT	WBR	NBL	NBT	NBR	SBL	SBT	SBR
1: Jackson Dr & WIS-60	19.9	B	Lane Configuration	1	1>	0	0	<1>	0	1	1>	0	1	1>	0
			Volume	70	480	30	40	455	45	115	55	60	85	25	185
			Delay (s)	9.5	0.0	11.6	23.5	0.0	0.0	32.0	0.0	22.1	25.8	0.0	24.3
			LOS	A	A	B	C	A	A	C	A	C	C	A	C
2: WIS-60 & Dentist/Coffee Shop Driveway	2.8	A	Lane Configuration	0	<1	-	-	1>	0	-	-	-	1>	-	0
			Volume	80	545	-	-	475	35	-	-	-	40	-	65
			Delay (s)	8.9	0.0	-	-	-	-	-	-	-	26.7	-	-
			LOS	A	A	-	-	-	-	-	-	-	D	-	-
3: WIS-60 & Ridgeway Dr	8.7	A	Lane Configuration	1	1>	0	1	1>	0	0	<1	1	0	<1>	0
			Volume	10	430	145	40	340	15	110	0	30	75	0	60
			Delay (s)	7.0	0.0	8.4	12.6	0.0	5.6	12.3	0.0	11.3	13.5	0.0	0.0
			LOS	A	A	A	B	A	A	B	A	B	B	A	A
4: WIS-60 & Office Building Driveway	0.3	A	Lane Configuration	0	1	-	-	1	0	-	-	-	1>	-	0
			Volume	25	510	-	-	385	5	-	-	-	0	-	10
			Delay (s)	8.3	-	-	-	-	-	-	-	-	10.8	-	-
			LOS	A	-	-	-	-	-	-	-	-	B	-	-
5: Shopping Center Driveway & WIS-60	0.0	A	Lane Configuration	-	1	0	0	1	-	1>	-	0	-	-	-
			Volume	-	510	0	0	390	-	0	-	0	-	-	-
			Delay (s)	-	-	-	-	-	-	0.0	-	-	-	-	-
			LOS	-	-	-	-	-	-	A	-	-	-	-	-
6: Eagle Dr & WIS-60	14.6	B	Lane Configuration	1	1>	0	1	1	1	0	<1>	0	1	1>	0
			Volume	75	385	50	35	280	90	35	25	50	80	15	75
			Delay (s)	17.1	0.0	18.8	22.5	12.7	10.7	9.8	0.0	0.0	9.3	0.0	9.7
			LOS	B	A	B	C	B	B	A	A	A	A	A	A

Weekday Evening Peak - Horizon Year Build - Alt 1 - Improved

Intersection	Overall		By Approach	Eastbound			Westbound			Northbound			Southbound		
	Delay (s)	LOS		EBL	EBT	EBR	WBL	WBT	WBR	NBL	NBT	NBR	SBL	SBT	SBR
1: Jackson Dr & WIS-60	20.7	C	Lane Configuration	1	1>	0	0	<1>	0	1	1>	0	1	1>	0
			Volume	180	565	125	50	490	100	75	80	55	85	65	105
			Delay (s)	8.2	0.0	11.6	26.5	0.0	0.0	35.9	0.0	28.4	33.8	0.0	29.6
			LOS	A	A	B	C	A	A	D	A	C	C	A	C
2: WIS-60 & Dentist/Coffee Shop Driveway	1.4	A	Lane Configuration	0	<1	-	-	1>	0	-	-	-	1>	-	0
			Volume	35	670	-	-	610	10	-	-	-	25	-	30
			Delay (s)	9.1	0.0	-	-	-	-	-	-	-	28.4	-	-
			LOS	A	A	-	-	-	-	-	-	-	D	-	-
3: WIS-60 & Ridgeway Dr	19.5	B	Lane Configuration	1	1>	0	1	1>	0	0	<1	1	0	<1>	0
			Volume	50	450	195	40	420	45	190	0	60	20	0	10
			Delay (s)	17.0	0.0	25.9	26.9	0.0	12.2	17.8	0.0	14.1	14.2	0.0	0.0
			LOS	B	A	C	C	A	B	B	A	B	B	A	A
4: WIS-60 & Office Building Driveway	0.2	A	Lane Configuration	0	1	-	-	1	0	-	-	-	1>	-	0
			Volume	0	530	-	-	495	0	-	-	-	5	-	10
			Delay (s)	-	-	-	-	-	-	-	-	-	15.1	-	-
			LOS	-	-	-	-	-	-	-	-	-	C	-	-
5: Shopping Center Driveway & WIS-60	0.0	A	Lane Configuration	-	1	0	0	1	-	1>	-	0	-	-	-
			Volume	-	535	0	0	495	-	0	-	0	-	-	-
			Delay (s)	-	-	-	-	-	-	0.0	-	-	-	-	-
			LOS	-	-	-	-	-	-	A	-	-	-	-	-
6: Eagle Dr & WIS-60	18.0	B	Lane Configuration	1	1>	0	1	1	1	0	<1>	0	1	1>	0
			Volume	60	315	160	85	335	85	105	45	65	60	40	55
			Delay (s)	18.6	0.0	24.2	29.0	13.7	10.7	14.2	0.0	0.0	10.9	0.0	11.3
			LOS	B	A	C	C	B	B	B	A	A	B	A	B

Saturday Midday Peak - Horizon Year Build - Alt 1 - Improved

Intersection	Overall		By Approach	Eastbound			Westbound			Northbound			Southbound		
	Delay (s)	LOS		EBL	EBT	EBR	WBL	WBT	WBR	NBL	NBT	NBR	SBL	SBT	SBR
1: Jackson Dr & WIS-60	16.1	B	Lane Configuration	1	1>	0	0	<1>	0	1	1>	0	1	1>	0
			Volume	65	525	85	60	510	80	95	45	60	75	35	80
			Delay (s)	6.2	0.0	7.7	18.3	0.0	0.0	29.7	0.0	25.0	28.5	0.0	25.4
			LOS	A	A	A	B	A	A	C	A	C	C	A	C
2: WIS-60 & Dentist/Coffee Shop Driveway	1.4	A	Lane Configuration	0	<1	-	-	1>	0	-	-	-	1>	-	0
			Volume	40	620	-	-	610	20	-	-	-	20	-	40
			Delay (s)	9.2	0.0	-	-	-	-	-	-	-	23.9	-	-
			LOS	A	A	-	-	-	-	-	-	-	C	-	-
3: WIS-60 & Ridgeway Dr	7.9	A	Lane Configuration	1	1>	0	1	1>	0	0	<1	1	0	<1>	0
			Volume	20	395	225	55	410	20	185	0	45	20	0	35
			Delay (s)	6.8	0.0	7.4	11.2	0.0	5.3	12.8	0.0	11.4	11.4	0.0	0.0
			LOS	A	A	A	B	A	A	B	A	B	B	A	A
4: WIS-60 & Office Building Driveway	0.0	A	Lane Configuration	0	1	-	-	1	0	-	-	-	1>	-	0
			Volume	5	455	-	-	485	0	-	-	-	0	-	0
			Delay (s)	8.5	-	-	-	-	-	-	-	-	0.0	-	-
			LOS	A	-	-	-	-	-	-	-	-	A	-	-
5: Shopping Center Driveway & WIS-60	0.0	A	Lane Configuration	-	1	0	0	1	-	1>	-	0	-	-	-
			Volume	-	455	0	0	485	-	0	-	0	-	-	-
			Delay (s)	-	-	-	-	-	-	0.0	-	-	-	-	-
			LOS	-	-	-	-	-	-	A	-	-	-	-	-
6: Eagle Dr & WIS-60	7.9	A	Lane Configuration	1	1>	0	1	1	1	0	<1>	0	1	1>	0
			Volume	55	265	135	75	295	40	110	35	60	60	35	80
			Delay (s)	7.7	0.0	7.5	10.0	6.3	5.0	10.1	0.0	0.0	8.3	0.0	9.0
			LOS	A	A	A	B	A	A	B	A	A	A	A	A

Weekday Morning Peak - Horizon Year Build - Alt 2 - Improved

Intersection	Overall		By Approach	Eastbound			Westbound			Northbound			Southbound		
	Delay (s)	LOS		EBL	EBT	EBR	WBL	WBT	WBR	NBL	NBT	NBR	SBL	SBT	SBR
1: Jackson Dr & WIS-60	19.9	B	Lane Configuration	1	1>	0	0	<1>	0	1	1>	0	1	1>	0
			Volume	70	480	30	40	455	45	115	55	60	85	25	185
			Delay (s)	9.5	0.0	11.6	23.5	0.0	0.0	32.0	0.0	22.1	25.8	0.0	24.3
			LOS	A	A	B	C	A	A	C	A	C	C	A	C
2: WIS-60 & Dentist/Coffee Shop Driveway	2.8	A	Lane Configuration	0	<1	-	-	1>	0	-	-	-	1>	-	0
			Volume	80	545	-	-	475	35	-	-	-	40	-	65
			Delay (s)	8.9	0.0	-	-	-	-	-	-	-	26.7	-	-
			LOS	A	A	-	-	-	-	-	-	-	D	-	-
3: WIS-60 & Ridgeway Dr	8.7	A	Lane Configuration	1	1>	0	1	1>	0	0	<1	1	0	<1>	0
			Volume	10	435	140	40	340	15	110	0	30	75	0	60
			Delay (s)	7.0	0.0	8.1	12.4	0.0	5.5	12.9	0.0	11.8	14.2	0.0	0.0
			LOS	A	A	A	B	A	A	B	A	B	B	A	A
4: WIS-60 & Office Building Driveway	0.3	A	Lane Configuration	0	1	-	-	1>	0	-	-	-	1>	-	0
			Volume	25	515	-	-	385	5	-	-	-	0	-	10
			Delay (s)	8.3	-	-	-	-	-	-	-	-	10.8	-	-
			LOS	A	-	-	-	-	-	-	-	-	B	-	-
5: Shopping Center Driveway & WIS-60	0.3	A	Lane Configuration	-	1	0	0	1	-	1>	-	0	-	-	-
			Volume	-	500	15	5	385	-	5	-	10	-	-	-
			Delay (s)	-	-	-	8.6	-	-	14.2	-	-	-	-	-
			LOS	-	-	-	A	-	-	B	-	-	-	-	-
6: Eagle Dr & WIS-60	6.6	A	Lane Configuration	1	1>	0	1	1	1	0	<1>	0	1	1>	0
			Volume	75	395	40	30	285	90	30	25	40	80	15	75
			Delay (s)	6.2	0.0	6.2	8.0	4.8	3.9	9.9	0.0	0.0	9.3	0.0	10.4
			LOS	A	A	A	A	A	A	A	A	A	A	A	B

Weekday Evening Peak - Horizon Year Build - Alt 2 - Improved

Intersection	Overall		By Approach	Eastbound			Westbound			Northbound			Southbound		
	Delay (s)	LOS		EBL	EBT	EBR	WBL	WBT	WBR	NBL	NBT	NBR	SBL	SBT	SBR
1: Jackson Dr & WIS-60	20.7	C	Lane Configuration	1	1>	0	0	<1>	0	1	1>	0	1	1>	0
			Volume	180	565	125	50	490	100	75	80	55	85	65	105
			Delay (s)	8.2	0.0	11.6	26.5	0.0	0.0	35.9	0.0	28.4	33.8	0.0	29.6
			LOS	A	A	B	C	A	A	D	A	C	C	A	C
2: WIS-60 & Dentist/Coffee Shop Driveway	1.4	A	Lane Configuration	0	<1	-	-	1>	0	-	-	-	1>	-	0
			Volume	35	670	-	-	610	10	-	-	-	25	-	30
			Delay (s)	9.1	0.0	-	-	-	-	-	-	-	28.4	-	-
			LOS	A	A	-	-	-	-	-	-	-	D	-	-
3: WIS-60 & Ridgeway Dr	9.3	A	Lane Configuration	1	1>	0	1	1>	0	0	<1	1	0	<1>	0
			Volume	50	455	190	40	425	45	185	0	60	20	0	10
			Delay (s)	8.8	0.0	9.5	13.5	0.0	6.0	14.6	0.0	12.9	12.6	0.0	0.0
			LOS	A	A	A	B	A	A	B	A	B	B	A	A
4: WIS-60 & Office Building Driveway	0.2	A	Lane Configuration	0	1	-	-	1>	0	-	-	-	1>	-	0
			Volume	0	535	-	-	500	0	-	-	-	5	-	10
			Delay (s)	-	-	-	-	-	-	-	-	-	15.2	-	-
			LOS	-	-	-	-	-	-	-	-	-	C	-	-
5: Shopping Center Driveway & WIS-60	1.3	A	Lane Configuration	-	1	0	0	1	-	1>	-	0	-	-	-
			Volume	-	505	35	20	465	-	35	-	25	-	-	-
			Delay (s)	-	-	-	8.8	-	-	20.8	-	-	-	-	-
			LOS	-	-	-	A	-	-	C	-	-	-	-	-
6: Eagle Dr & WIS-60	8.0	A	Lane Configuration	1	1>	0	1	1	1	0	<1>	0	1	1>	0
			Volume	60	340	130	65	355	85	75	45	40	60	40	55
			Delay (s)	8.0	0.0	7.4	10.9	5.9	4.5	12.1	0.0	0.0	10.3	0.0	11.1
			LOS	A	A	A	B	A	A	B	A	A	B	A	B

Saturday Midday Peak - Horizon Year Build - Alt 2 - Improved

Intersection	Overall		By Approach	Eastbound			Westbound			Northbound			Southbound		
	Delay (s)	LOS		EBL	EBT	EBR	WBL	WBT	WBR	NBL	NBT	NBR	SBL	SBT	SBR
1: Jackson Dr & WIS-60	16.1	B	Lane Configuration	1	1>	0	0	<1>	0	1	1>	0	1	1>	0
			Volume	65	525	85	60	510	80	95	45	60	75	35	80
			Delay (s)	6.2	0.0	7.7	18.3	0.0	0.0	29.7	0.0	25.0	28.5	0.0	25.4
			LOS	A	A	A	B	A	A	C	A	C	C	A	C
2: WIS-60 & Dentist/Coffee Shop Driveway	1.4	A	Lane Configuration	0	<1	-	-	1>	0	-	-	-	1>	-	0
			Volume	40	620	-	-	610	20	-	-	-	20	-	40
			Delay (s)	9.2	0.0	-	-	-	-	-	-	-	23.9	-	-
			LOS	A	A	-	-	-	-	-	-	-	C	-	-
3: WIS-60 & Ridgeway Dr	7.6	A	Lane Configuration	1	1>	0	1	1>	0	0	<1	1	0	<1>	0
			Volume	20	410	210	55	420	20	175	0	45	20	0	35
			Delay (s)	6.7	0.0	7.2	10.7	0.0	5.2	12.5	0.0	11.4	11.4	0.0	0.0
			LOS	A	A	A	B	A	A	B	A	B	B	A	A
4: WIS-60 & Office Building Driveway	0.0	A	Lane Configuration	0	1	-	-	1>	0	-	-	-	1>	-	0
			Volume	5	470	-	-	495	0	-	-	-	0	-	0
			Delay (s)	8.5	-	-	-	-	-	-	-	-	0.0	-	-
			LOS	A	-	-	-	-	-	-	-	-	A	-	-
5: Shopping Center Driveway & WIS-60	1.5	A	Lane Configuration	-	1	0	0	1	-	1>	-	0	-	-	-
			Volume	-	415	55	20	450	-	45	-	20	-	-	-
			Delay (s)	-	-	-	8.5	-	-	20.0	-	-	-	-	-
			LOS	-	-	-	A	-	-	C	-	-	-	-	-
6: Eagle Dr & WIS-60	7.0	A	Lane Configuration	1	1>	0	1	1	1	0	<1>	0	1	1>	0
			Volume	55	285	95	55	315	40	75	35	40	60	35	80
			Delay (s)	7.1	0.0	6.5	8.2	5.8	4.4	9.1	0.0	0.0	7.9	0.0	8.8
			LOS	A	A	A	A	A	A	A	A	A	A	A	A

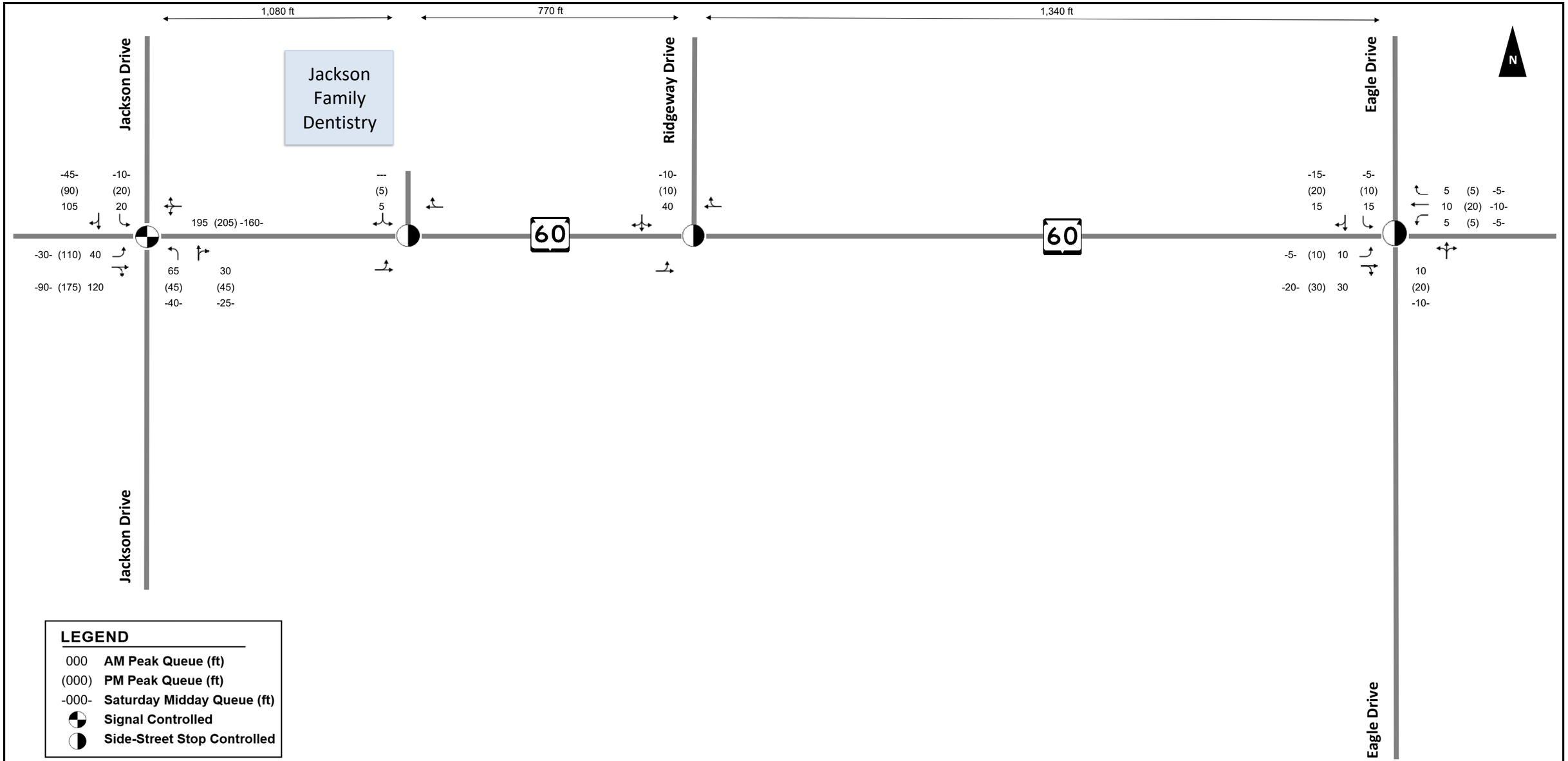

Maximum Queue Lengths, Improved Transportation System: Base Year Background Traffic

Exhibit 5-18

SRF Consulting Group, Inc.

Jackson TIF District TIA

Village of Jackson, WI

May 2020

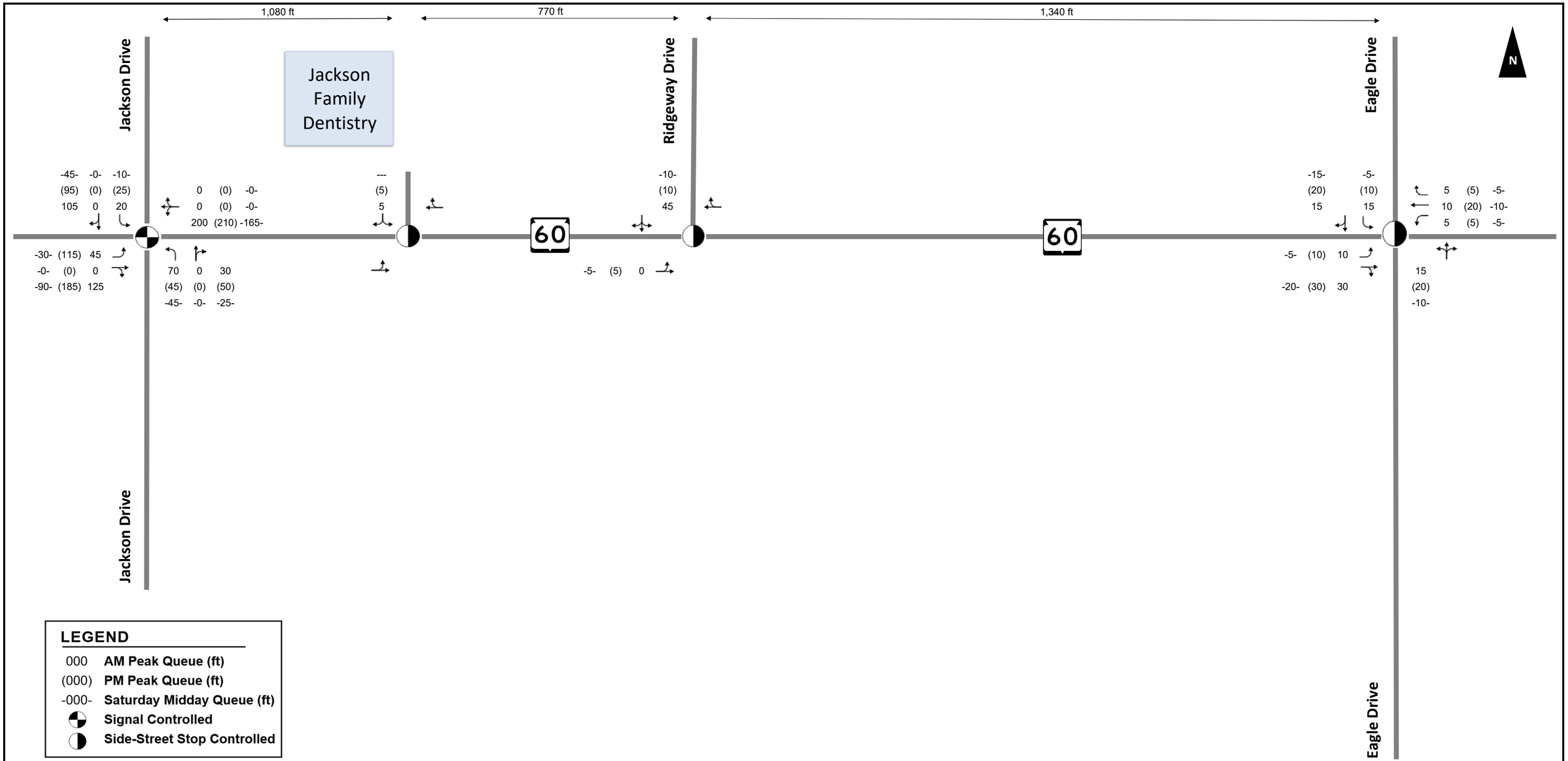

Maximum Queue Lengths, Improved Transportation System: Interim Year (2025) Background Traffic

Exhibit 5-19

SRF Consulting Group, Inc.

Jackson TIF District TIA

Village of Jackson, WI

May 2020

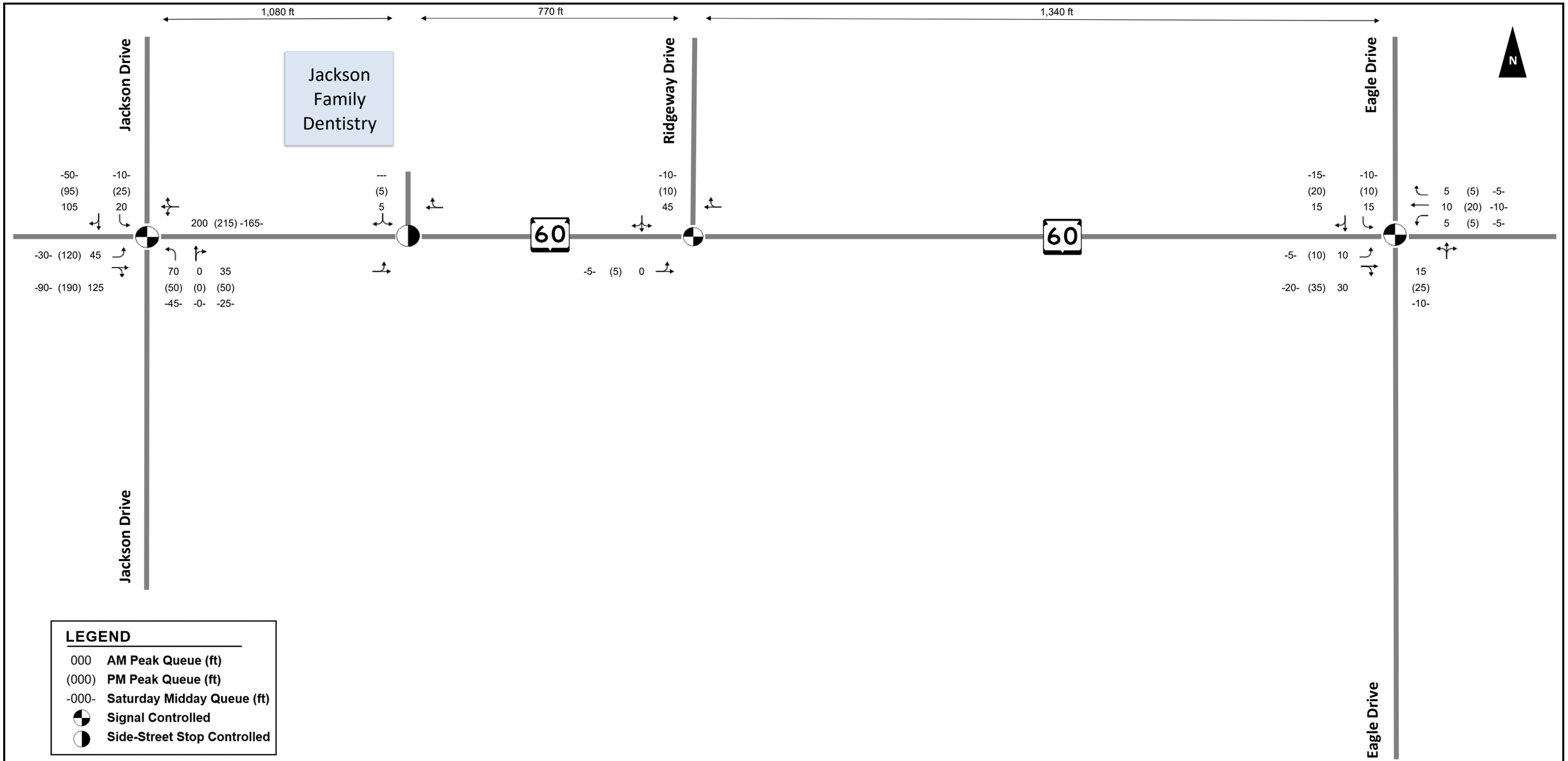

SRF Consulting Group, Inc.

May 2020

Maximum Queue Lengths, Improved Transportation System: Horizon (2030) Background Traffic

Jackson TIF District TIA

Village of Jackson, WI

Exhibit 5-20

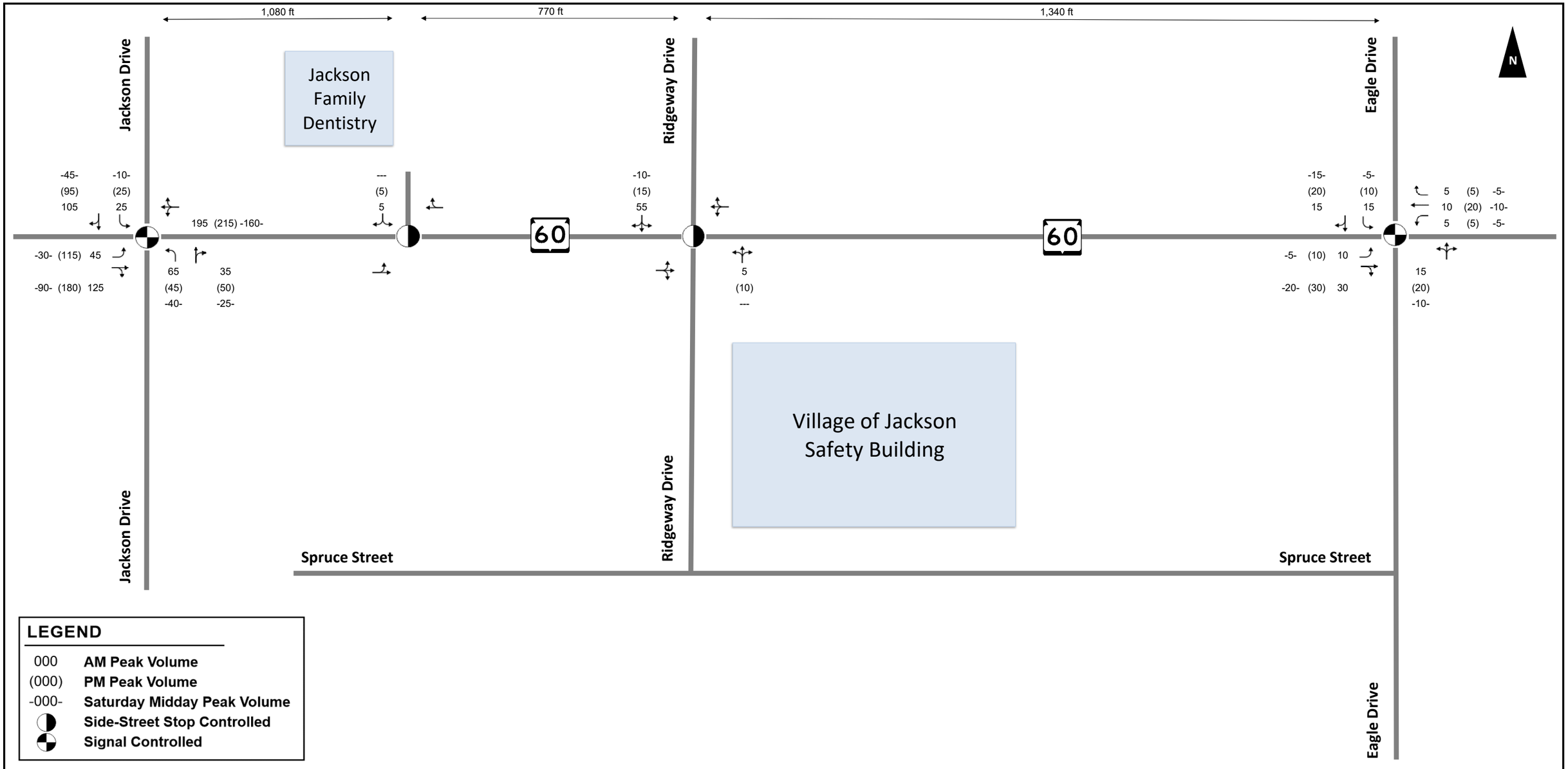

Maximum Queue Lengths, Improved Transportation System: Base Year Build Development

Exhibit 5-21

SRF Consulting Group, Inc.

Jackson TIF District TIA

Village of Jackson, WI

May 2020

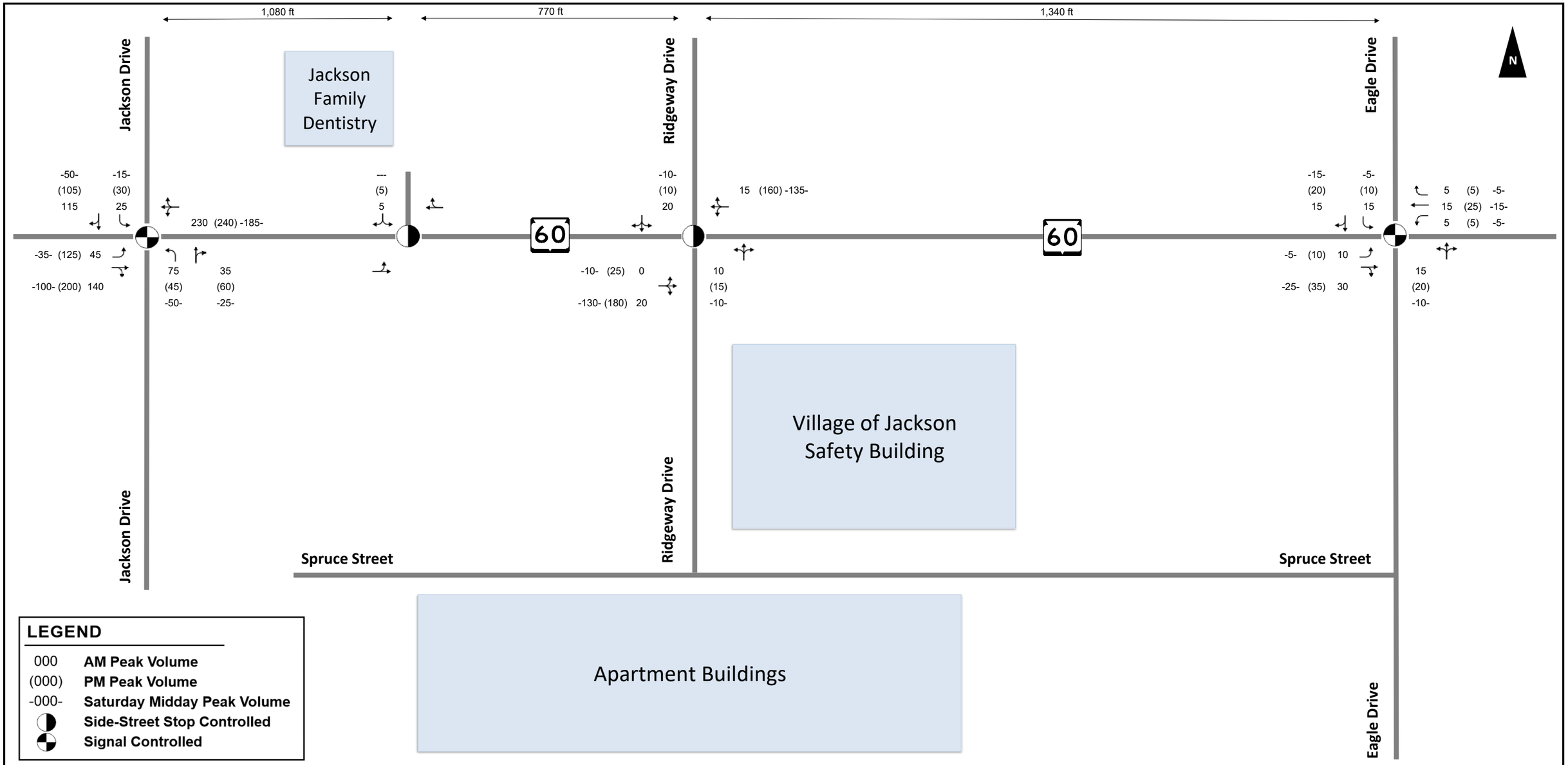

SRF Consulting Group, Inc.

May 2020

Maximum Queue Lengths, Improved Transportation System: Interim Year (2030) Build Development

Jackson TIF District TIA

Village of Jackson, WI

Exhibit 5-22

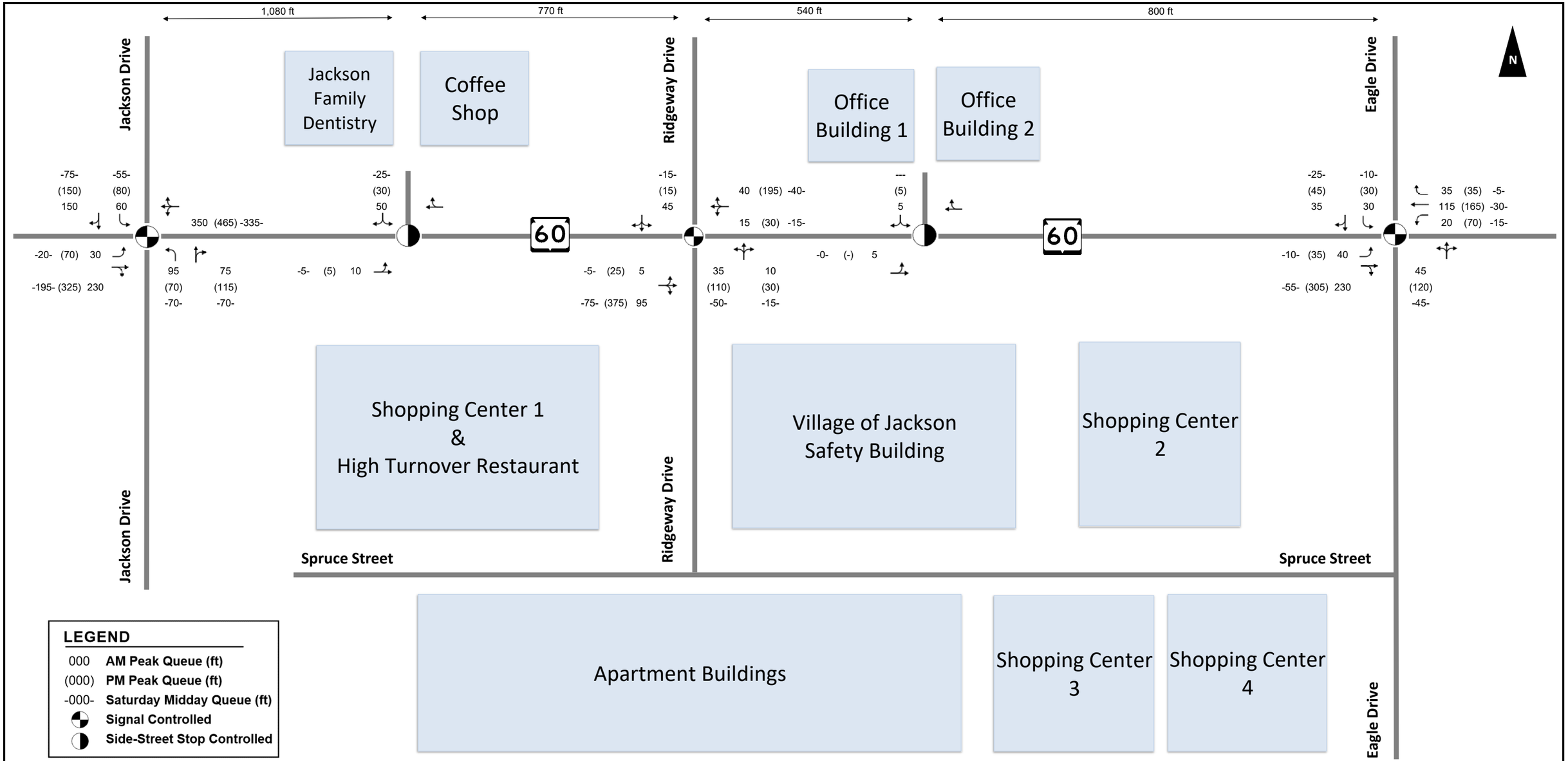

SRF Consulting Group, Inc.

May 2020

Maximum Queue Lengths, Improved Transportation System: Horizon - 1 (2035) Build Development

Jackson TIF District TIA

Village of Jackson, WI

Exhibit 5-23.1

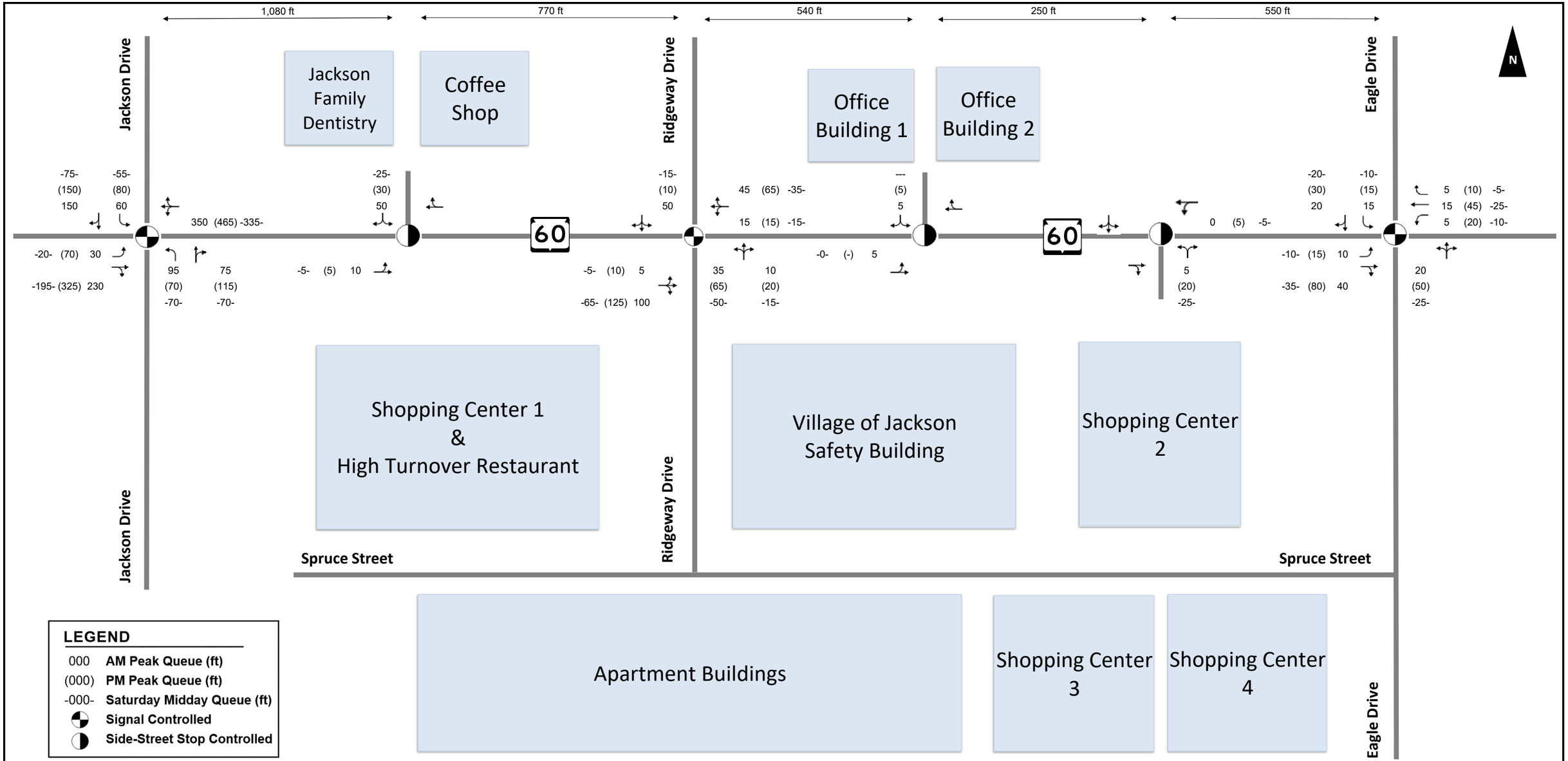

SRF Consulting Group, Inc.

May 2020

Maximum Queue Lengths, Improved Transportation System: Horizon - 2 (2035) Build Development

Jackson TIF District TIA

Village of Jackson, WI

Exhibit 5-23.2

SRF Consulting Group, Inc.

South Leg Ridgeway Drive - Site Distance Imagery

Jackson TIF District TIA

Village of Jackson, WI

Exhibit 5-27A

13292
May 2020

SRF Consulting Group, Inc.

Proposed Office Building Driveway - Site Distance Imagery

Jackson TIF District TIA

Village of Jackson, WI

Exhibit 5-27B

13292
May 2020

SRF Consulting Group, Inc.

Proposed Shopping Center 2 Driveway - Site Distance Imagery

Jackson TIF District TIA

Village of Jackson, WI

Exhibit 5-27C

13292
May 2020

Chapter 6 Conclusions and Recommendations

A. Recommendations

The following recommendations for a proposed Village of Jackson TIF District are based on findings of HCM 6 operations analysis for the study area intersections under background and build conditions. Note that improvements are recommended for consideration and are not legally binding. Conceptual drawings for the improvements can be found in **Exhibits 6-1A, 6-1B and 6-1C.**

1. Base, Interim and Horizon Background Traffic

WIS 60 and Eagle Drive

Though poor operations (LOS F) are currently present at the intersection of WIS 60 and Eagle Drive, the intersection does not meet current year traffic signal warrants. The study recommends further review via Phase II ICE and consideration that this intersection be replaced with a modern roundabout based on the current and future background traffic operational deficiencies.

2. Base Build Traffic

WIS 60 and Eagle Drive

Though poor operations (LOS F) are expected to be present under the base build traffic scenario, the results are similar to those found in the base year background scenario. Therefore, no specific improvements are required (beyond those necessary for background scenarios) under this scenario. Background growth should drive the consideration of a roundabout conversion.

WIS 60 and Ridgeway Drive

The intersection of WIS 60 and Ridgeway drive is proposed to be built into a four-legged intersection in summer 2020 as part of the TIF district initial construction. The additional south leg of the intersection is proposed to be a single lane for all turn movements. Base year build traffic operates acceptably with this proposed design.

3. Interim Build Traffic

WIS 60 and Eagle Drive

Though poor operations (LOS F) are expected to be present under the interim build traffic scenario, the results are similar to those found in the interim year background scenario. Therefore, no specific improvements are required (beyond those necessary for background scenarios) under this scenario. Background growth should drive the consideration of a roundabout conversion.

WIS 60 and Ridgeway Drive

The addition of interim build site traffic to the intersection of Ridgeway Drive causes operations for northbound traffic to degrade from LOS A to LOS D during the morning and evening peaks. To mitigate this poor traffic condition, changes in traffic control to either a traffic signal or roundabout would be necessary. Signal warrants however are not met at this intersection with interim build traffic and therefore no improvements are recommended under this scenario.

4. Horizon Build Traffic Alternatives 1 and 2

WIS 60 and Eagle Drive

Poor operations at the intersection under both horizon build traffic alternative scenarios are worse than those found in the horizon background scenario. Under this scenario, improvements are necessary to provide safe and efficient passage for all motorists traveling through the intersection. To mitigate this condition, changes in traffic control to either a traffic signal or roundabout would be appropriate. Signal warrants are met at this intersection with horizon build traffic under both alternatives. It is recommended that either a traffic signal or modern roundabout be implemented for the horizon year scenario (if a signal or roundabout are not already implemented at a prior date). A traffic signal with permissive phasing or single lane roundabout is adequate for improving operations.

WIS 60 and Ridgeway Drive

Poor operations present at the intersection WIS 60 and Ridgeway Drive under both horizon build alternatives continue to degrade from the horizon background scenario. To mitigate this condition, changes in traffic control to either a traffic signal or roundabout would be appropriate. Signal warrants are met at this intersection with horizon build traffic under both alternatives. It is recommended that either a traffic signal or modern roundabout be implemented for the horizon year scenario (if a signal or roundabout are not already implemented at a prior date). A traffic signal with permissive phasing or single lane roundabout is adequate for improving operations.

B. Conclusion

Full build out of the Village of Jackson TIF District under Horizon Year Build conditions (both Alternative 1 and 2) is expected to result in poor LOS at Ridgeway Drive and Eagle Drive starting in the base year background scenario for Eagle Drive and in the Interim Year build scenario for Jackson Drive. Signal warrants are not met for either intersection until the Horizon Year build scenario (2035). Therefore, either less-than-desirable LOS will need to be tolerated for some time or further review via a Phase II ICE for implementation of a modern roundabouts should be considered for the interim.

Upon meeting warrants, implementation of the following improvements are recommended to mitigate poor LOS conditions:

- Install modern roundabout or traffic signals at WIS 60 and Eagle Drive within five years. Signal warrants are not met until year 2035, but this location could benefit from active control sooner than 2035 because it will be used as a pedestrian crossing location for the grocery store. A roundabout should be a consideration for installation within the next five years.
- Install roundabout or traffic signals at WIS 60 and Ridgeway Drive by year 2035. If signals are installed, construct EB and WB left turn lanes and separate the NB movement into one shared left turn/through lane and one right turn lane.

Queues at each intersection are not expected to conflict with adjacent driveways.

C. Chapter 6 Exhibits

Exhibit 6 1A Eagle Drive Background Concept 1 – Roundabout
Exhibit 6 1B Ridgeway Drive Background Concept 1 – Roundabout
Exhibit 6 1C Ridgeway Drive Build Concept 1 - Signalized Intersection with Turn Lanes

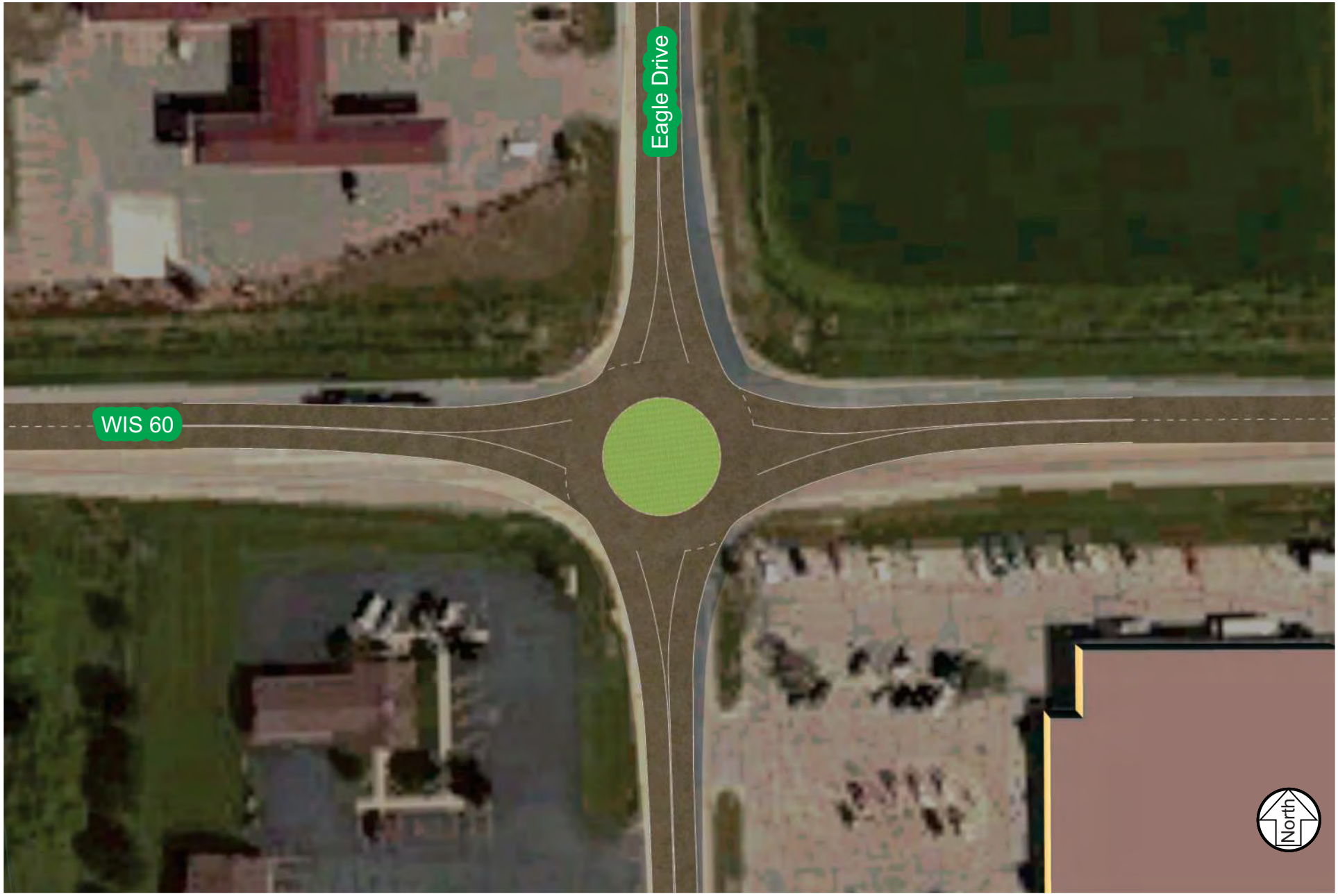

SRF Consulting Group, Inc.

Eagle Drive Background Concept 1 - Roundabout

Jackson TIF District TIA

Village of Jackson, WI

Exhibit 6-1A

13292
May 2020

SRF Consulting Group, Inc.

Ridgeway Drive Background Concept 1 - Roundabout

Jackson TIF District TIA

Village of Jackson, WI

Exhibit 6-1B

13292
May 2020

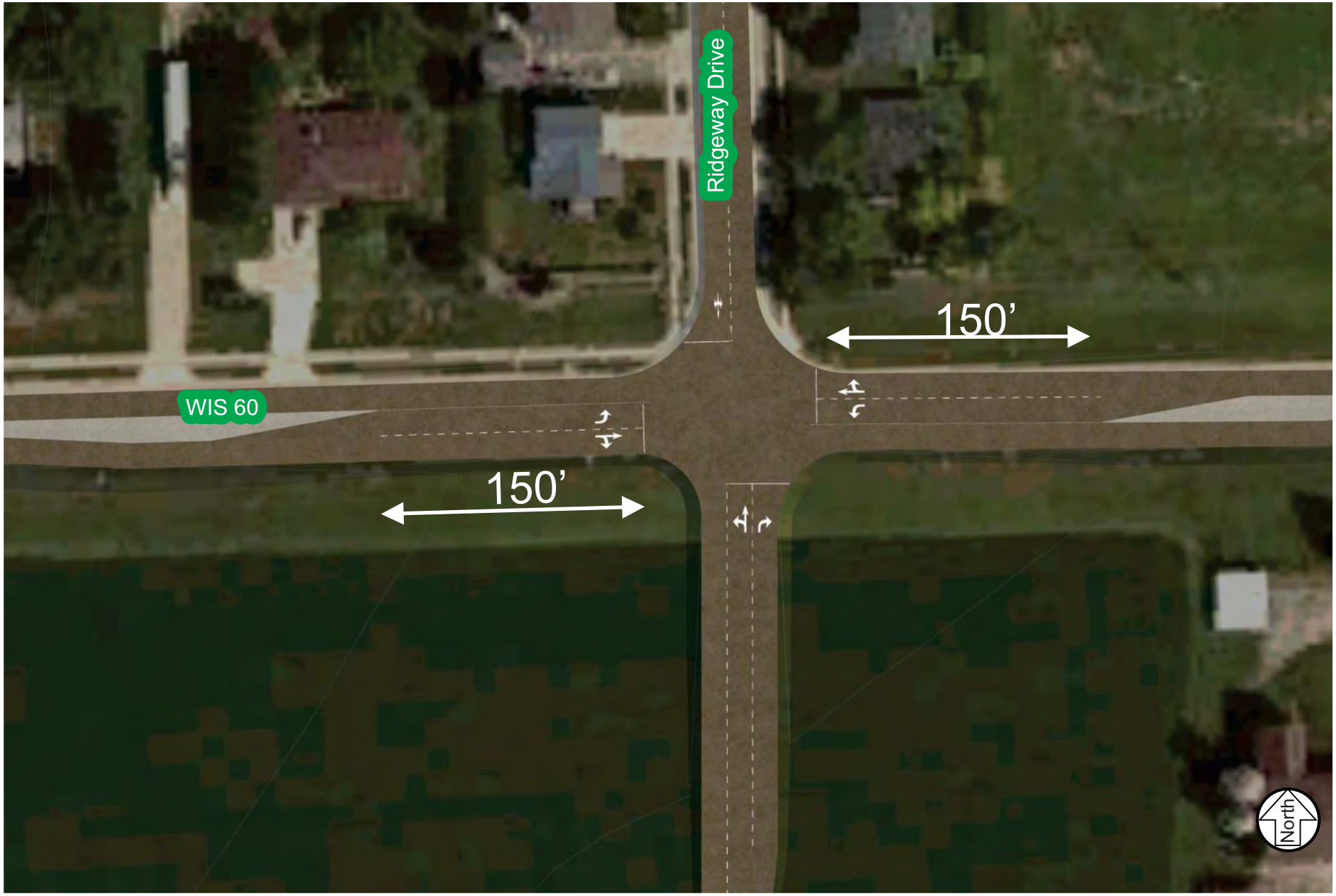

SRF Consulting Group, Inc.

Ridgeway Drive Build Concept 1 - Signalized Intersection with Turn Lanes

Jackson TIF District TIA

Village of Jackson, WI

Exhibit 6-1C

13292
May 2020

Appendix A: Traffic

Existing Traffic Counts, PHF and Percent Heavy Vehicles
Future Traffic Projections
Intersection Sight Distances
Existing Signal Phasing and Timing

Intersection Traffic Volume Report

Count Basics	Version 2013.J4.1		Page 1 of 11
Start Date:	Wednesday, October 18, 2017	Weekday	Schools in Session
Total Number of Hours Counted: 13		Non-Holiday	No Special Events

Base Information, Observed (13) Hour and Estimated (24) Hour Volume Summaries

Intersection of: Jackson Drive and STH 60

Site Information

Municipality	Jackson		
County	Washington	WisDOT Region	SE
Traffic Control	Traffic Signal		
Roadway Names		North Direction	↑
North Leg	Jackson Drive		
East Leg	STH 60		
South Leg	Jackson Drive		
West Leg	STH 60		
Special Considerations			
Schools	In Session		
Holidays	None		
Special Events	None		
Special Pedestrians Observed			
Pre-school children		None	
Elementry school age children		Many	
Visually impaired (white cane/helper dog)		None	
Elderly/disabled (except wheelchairs)		None	
Wheelchairs/electric scooters		None	
Other (describe)	None	None	

Count Information

Hrs Counted:	6:00 AM-7:00 PM				
1st Day of Count	Wednesday, October 18, 2017			Weather	
AM Peak Period	Wednesday, October 18, 2017			Clear & Dry	
Midday Peak Period	Wednesday, October 18, 2017			Clear & Dry	
PM Peak Period	Wednesday, October 18, 2017			Clear & Dry	
Calculated Peak Hours					
AM	7:00-8:00am	MD	11:45-12:45pm	PM	4:45-5:45pm
Peak Hours Selected for Analysis					
AM	7:00-8:00am	MD	11:45-12:45pm	PM	4:45-5:45pm
Daily/Seasonal Adjustment Group	(2) Urban Arterials & Collectors				
Count Expansion Group	(2) Urban Arterials & Collectors				
Daily/Seasonal Adjustment Factor	0.911		Count Expansion Factor	1.221	
Company Name	TADi			Manual Adj.	1.000
Observers	AM Peak Period	Amy Scheuerlein			
	Midday Peak Period	Ted Atwell			
	PM Peak Period	Karlyn Bieberitz			
Comments	2016 DOT Seasonal Factors				

Observed 13 Hour Volume Summary

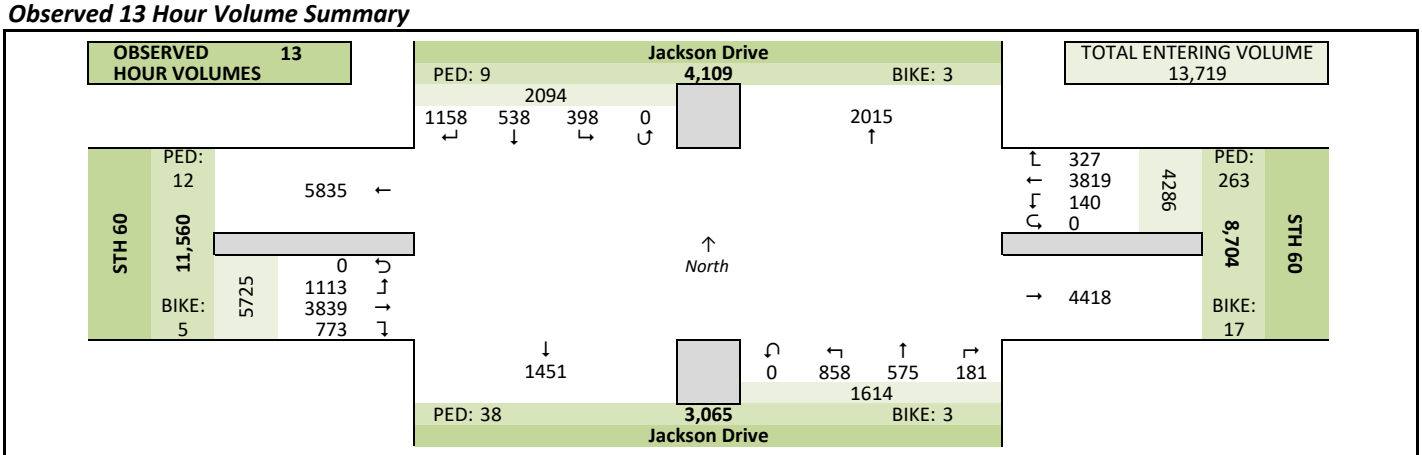

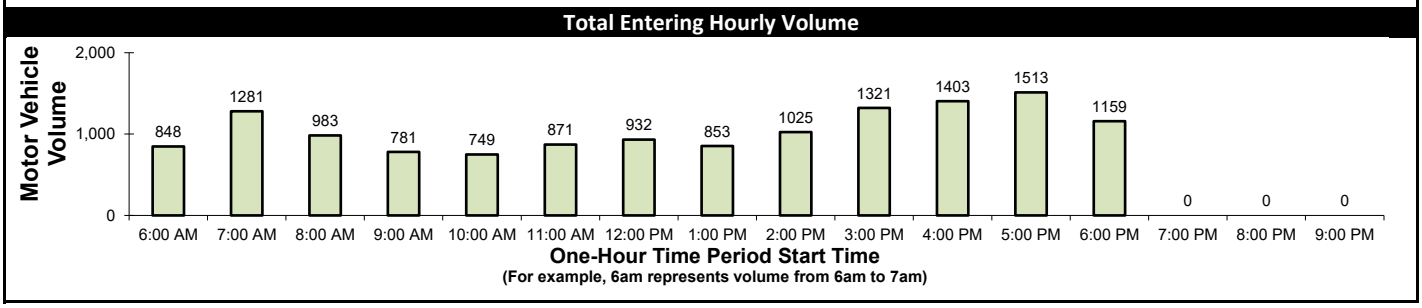

Estimated 24 Hour AADT

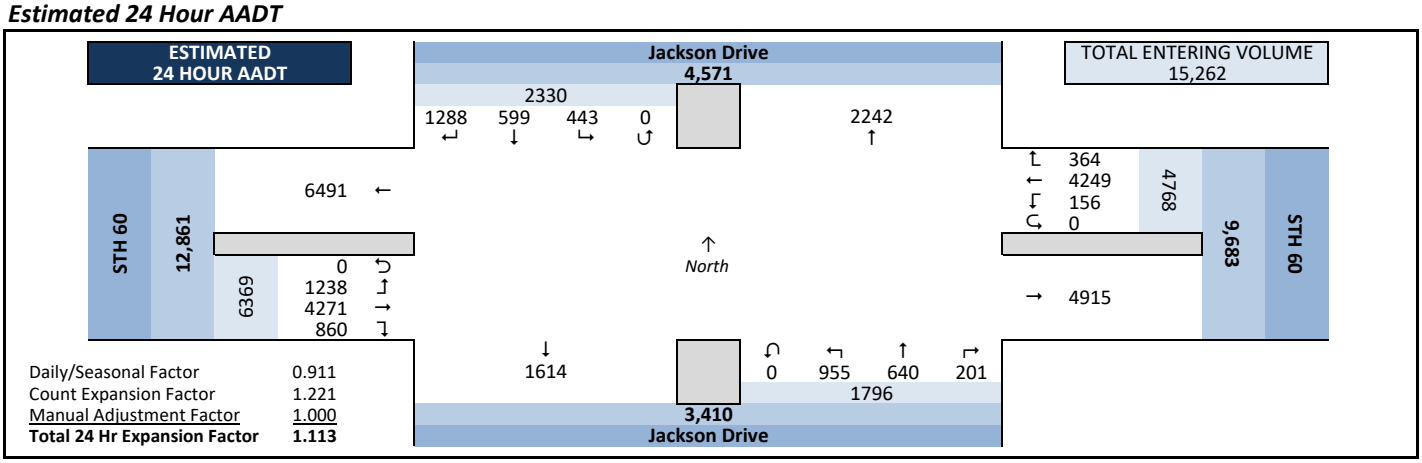

Daily/Seasonal Factor	0.911
Count Expansion Factor	1.221
Manual Adjustment Factor	1.000
Total 24 Hr Expansion Factor	**1.113**

Intersection Traffic Volume Report

Count Basics			Page 2 of 11
Start Date:	Wednesday, October 18, 2017	Weekday	Schools in Session
Total Number of Hours Counted: 13		Non-Holiday	No Special Events

Peak Hour Volume Graphical Summary

All Motor Vehicles

Jackson Drive and STH 60

AM Peak Hour Summary

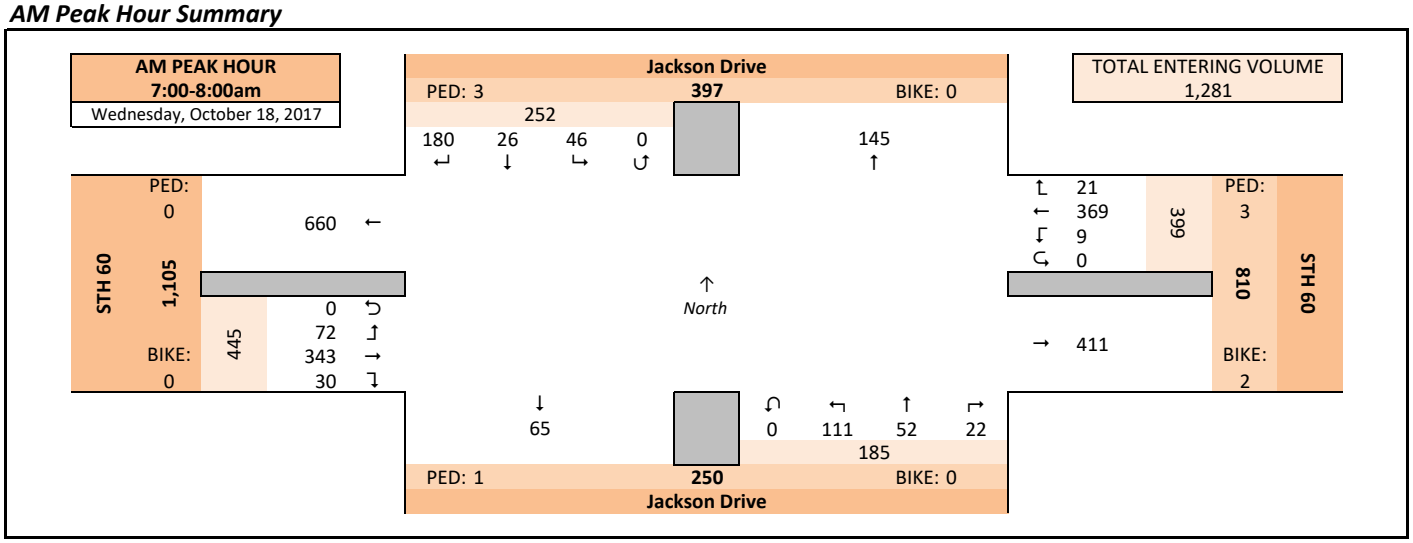

Midday (MD) Peak Hour Summary

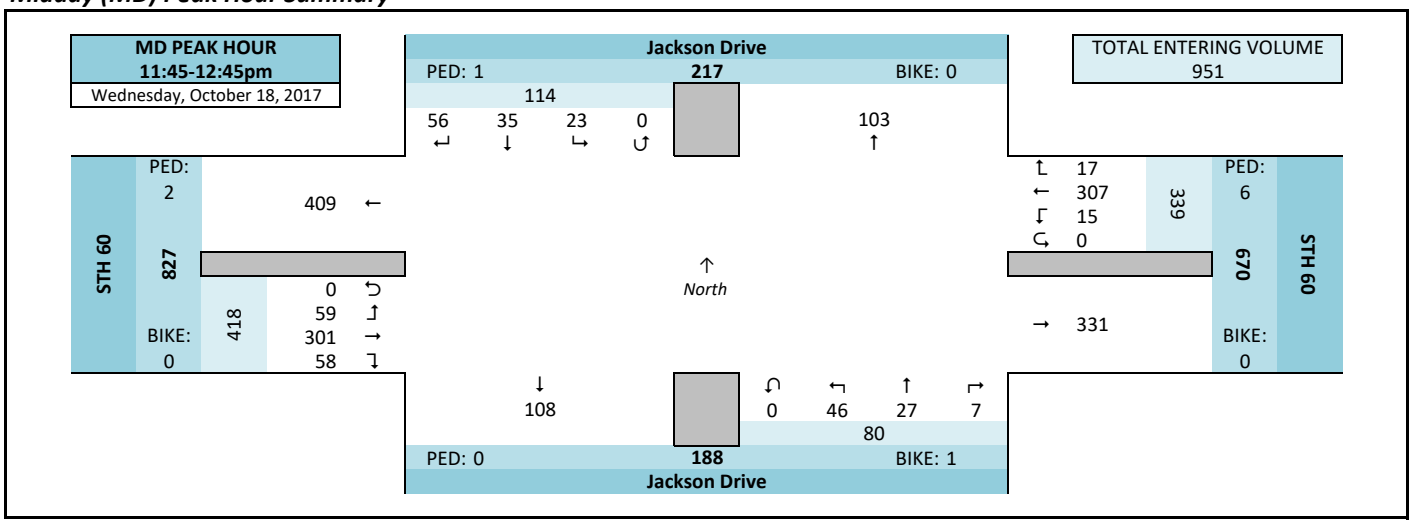

PM Peak Hour Summary

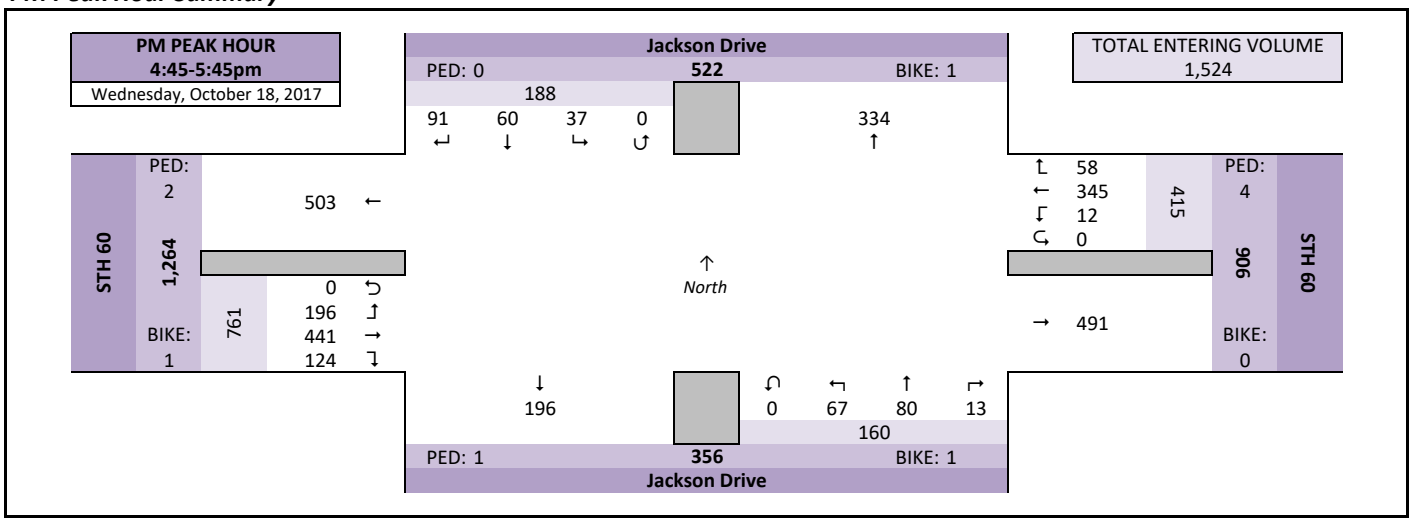

Intersection Traffic Volume Report

Count Basics			Page 3 of 11
Start Date:	Wednesday, October 18, 2017	Weekday	Schools in Session
Total Number of Hours Counted: 13		Non-Holiday	No Special Events

Peak Hour Volume Summary

All Motor Vehicles

Jackson Drive and STH 60

Peak Hour Volumes, Truck Percentages, and PHFs

Wednesday, October 18, 2017		↓ From North					← From East					↑ From South					→ From West					
	AM Peak Hour	Jackson Drive					STH 60					Jackson Drive					STH 60					
	Start Time	Right	Thru	Left	U-Tn	Total	Right	Thru	Left	U-Tn	Total	Right	Thru	Left	U-Tn	Total	Right	Thru	Left	U-Tn	Total	Totals
AM Peak Hour	7:00 AM	50	8	8	0	66	2	80	4	0	86	5	17	29	0	51	6	77	18	0	101	304
	7:15 AM	46	6	15	0	67	6	103	2	0	111	6	6	25	0	37	3	95	19	0	117	332
	7:30 AM	42	3	12	0	57	6	97	1	0	104	3	12	44	0	59	8	93	10	0	111	331
	7:45 AM	42	9	11	0	62	7	89	2	0	98	8	17	13	0	38	13	78	25	0	116	314
	Peak Hour Volume	180	26	46	0	252	21	369	9	0	399	22	52	111	0	185	30	343	72	0	445	1281
	Rounded Hourly Volume	180	25	45	0	250	20	370	10	0	400	20	50	110	0	180	30	345	70	0	445	1275
	% Single Unit Trucks	2.8	3.8	2.2	0.0	2.8	0.0	7.0	0.0	0.0	6.5	9.1	3.8	4.5	0.0	4.9	10.0	7.0	2.8	0.0	6.5	5.5
	% Heavy Trucks	0.0	0.0	0.0	0.0	0.0	0.0	2.2	0.0	0.0	2.0	0.0	0.0	0.0	0.0	0.0	0.0	4.4	0.0	0.0	3.4	1.8
	% Trucks (Total)	2.8	3.8	2.2	0.0	2.8	0.0	9.2	0.0	0.0	8.5	9.1	3.8	4.5	0.0	4.9	10.0	11.4	2.8	0.0	9.9	7.3
	Peak Hour Factor (PHF)	0.90	0.72	0.77	0.00	0.94	0.75	0.90	0.56	0.00	0.90	0.69	0.76	0.63	0.00	0.78	0.58	0.90	0.72	0.00	0.95	0.96

Wednesday, October 18, 2017		↓ From North					← From East					↑ From South					→ From West					
	MD Peak Hour	Jackson Drive					STH 60					Jackson Drive					STH 60					
	Start Time	Right	Thru	Left	U-Tn	Total	Right	Thru	Left	U-Tn	Total	Right	Thru	Left	U-Tn	Total	Right	Thru	Left	U-Tn	Total	Totals
Midday (MD) Peak Hour	11:45 AM	12	9	6	0	27	3	76	4	0	83	1	8	12	0	21	17	75	21	0	113	244
	12:00 PM	15	11	6	0	32	2	62	4	0	68	3	6	9	0	18	13	77	15	0	105	223
	12:15 PM	16	7	8	0	31	6	81	5	0	92	2	7	12	0	21	11	71	11	0	93	237
	12:30 PM	13	8	3	0	24	6	88	2	0	96	1	6	13	0	20	17	78	12	0	107	247
	Peak Hour Volume	56	35	23	0	114	17	307	15	0	339	7	27	46	0	80	58	301	59	0	418	951
	Rounded Hourly Volume	55	35	25	0	115	15	305	15	0	335	5	25	45	0	75	60	300	60	0	420	945
	% Single Unit Trucks	5.4	2.9	0.0	0.0	3.5	0.0	8.1	13.3	0.0	8.0	28.6	14.8	4.3	0.0	10.0	1.7	9.6	5.1	0.0	7.9	7.6
	% Heavy Trucks	0.0	0.0	0.0	0.0	0.0	0.0	4.6	0.0	0.0	4.1	0.0	0.0	0.0	0.0	0.0	0.0	5.3	0.0	0.0	3.8	3.2
	% Trucks (Total)	5.4	2.9	0.0	0.0	3.5	0.0	12.7	13.3	0.0	12.1	28.6	14.8	4.3	0.0	10.0	1.7	15.0	5.1	0.0	11.7	10.7
	Peak Hour Factor (PHF)	0.87	0.80	0.72	0.00	0.89	0.71	0.87	0.75	0.00	0.88	0.58	0.84	0.88	0.00	0.95	0.85	0.96	0.70	0.00	0.92	0.96

Wednesday, October 18, 2017		↓ From North					← From East					↑ From South					→ From West					
	PM Peak Hour	Jackson Drive					STH 60					Jackson Drive					STH 60					
	Start Time	Right	Thru	Left	U-Tn	Total	Right	Thru	Left	U-Tn	Total	Right	Thru	Left	U-Tn	Total	Right	Thru	Left	U-Tn	Total	Totals
PM Peak Hour	4:45 PM	21	9	8	0	38	12	92	2	0	106	2	21	18	0	41	26	117	43	0	186	371
	5:00 PM	23	18	13	0	54	12	89	3	0	104	4	16	16	0	36	33	128	43	0	204	398
	5:15 PM	29	15	8	0	52	17	87	5	0	109	4	23	17	0	44	36	108	59	0	203	408
	5:30 PM	18	18	8	0	44	17	77	2	0	96	3	20	16	0	39	29	88	51	0	168	347
	Peak Hour Volume	91	60	37	0	188	58	345	12	0	415	13	80	67	0	160	124	441	196	0	761	1524
	Rounded Hourly Volume	90	60	35	0	185	60	345	10	0	415	15	80	65	0	160	125	440	195	0	760	1520
	% Single Unit Trucks	0.0	3.3	0.0	0.0	1.1	0.0	3.2	8.3	0.0	2.9	0.0	3.7	1.5	0.0	2.5	4.0	1.6	3.6	0.0	2.5	2.4
	% Heavy Trucks	0.0	0.0	0.0	0.0	0.0	0.0	1.4	0.0	0.0	1.2	0.0	0.0	0.0	0.0	0.0	0.0	1.4	0.0	0.0	0.8	0.7
	% Trucks (Total)	0.0	3.3	0.0	0.0	1.1	0.0	4.6	8.3	0.0	4.1	0.0	3.7	1.5	0.0	2.5	4.0	2.9	3.6	0.0	3.3	3.1
	Peak Hour Factor (PHF)	0.78	0.83	0.71	0.00	0.87	0.85	0.94	0.60	0.00	0.95	0.81	0.87	0.93	0.00	0.91	0.86	0.86	0.83	0.00	0.93	0.93

Peak Hour Pedestrian and Bicyclist Volumes

Pedestrians and Bicyclists		Crossing North Approach			Crossing East Approach			Crossing South Approach			Crossing West Approach			Total Ped & Bike Volume
		Jackson Drive			STH 60			Jackson Drive			STH 60			
	15-Minute Start Time	Pedestrian	Bicyclist	Total	Pedestrian	Bicyclist	Total	Pedestrian	Bicyclist	Total	Pedestrian	Bicyclist	Total	
AM	7:00 AM	2	0	2	2	0	2	1	0	1	0	0	0	5
	7:15 AM	0	0	0	0	1	1	0	0	0	0	0	0	1
	7:30 AM	0	0	0	1	0	1	0	0	0	0	0	0	1
	7:45 AM	1	0	1	0	1	1	0	0	0	0	0	0	2
	Total	3	0	3	3	2	5	1	0	1	0	0	0	9
MD	11:45 AM	0	0	0	2	0	2	0	0	0	0	0	0	2
	12:00 PM	1	0	1	2	0	2	0	0	0	0	0	0	3
	12:15 PM	0	0	0	0	0	0	0	1	1	2	0	2	3
	12:30 PM	0	0	0	2	0	2	0	0	0	0	0	0	2
	Total	1	0	1	6	0	6	0	1	1	2	0	2	10
PM	4:45 PM	0	0	0	1	0	1	0	0	0	1	1	2	3
	5:00 PM	0	1	1	0	0	0	0	1	1	0	0	0	2
	5:15 PM	0	0	0	2	0	2	0	0	0	0	0	0	2
	5:30 PM	0	0	0	1	0	1	1	0	1	1	0	1	3
	Total	0	1	1	4	0	4	1	1	2	2	1	3	10

Intersection Traffic Volume Report

Count Basics			Page 4 of 11
Start Date:	Wednesday, October 18, 2017	Weekday	Schools in Session
Total Number of Hours Counted: 13		Non-Holiday	No Special Events

Hourly Volume Summary - Motor Vehicle Data

All Motor Vehicles

Jackson Drive and STH 60

One-Hour Motor Vehicle Data

One-Hour Time Period Start Time		From North (Jackson Drive) Right	Thru	Left	U-Tn	Total	From East (STH 60) Right	Thru	Left	U-Tn	Total	From South (Jackson Drive) Right	Thru	Left	U-Tn	Total	From West (STH 60) Right	Thru	Left	U-Tn	Total	Total Vehicle Volume	Directional Volume Totals E/W	N/S
AM	6:00 AM	132	23	31	0	186	16	239	7	0	262	18	35	70	0	123	24	218	35	0	277	848	539	309
	7:00 AM	180	26	46	0	252	21	369	9	0	399	22	52	111	0	185	30	343	72	0	445	1281	844	437
	8:00 AM	115	47	36	0	198	16	273	11	0	300	21	56	88	0	165	39	227	54	0	320	983	620	363
	9:00 AM	63	21	20	0	104	24	235	7	0	266	9	30	45	0	84	37	263	27	0	327	781	593	188
MD	10:00 AM	50	20	24	0	94	17	217	8	0	242	8	17	61	0	86	38	242	47	0	327	749	569	180
	11:00 AM	55	36	26	0	117	15	257	13	0	285	8	29	54	0	91	53	259	66	0	378	871	663	208
	12:00 PM	54	32	23	0	109	21	317	15	0	353	10	31	45	0	86	53	284	47	0	384	932	737	195
	1:00 PM	51	38	23	0	112	21	238	5	0	264	13	28	69	0	110	50	266	51	0	367	853	631	222
PM	2:00 PM	54	31	19	0	104	19	333	8	0	360	13	21	65	0	99	66	323	73	0	462	1025	822	203
	3:00 PM	101	60	38	0	199	30	358	19	0	407	19	57	51	0	127	73	369	146	0	588	1321	995	326
	4:00 PM	107	57	38	0	202	36	372	11	0	419	15	62	61	0	138	89	405	150	0	644	1403	1063	340
	5:00 PM	88	68	32	0	188	54	349	18	0	421	15	86	72	0	173	123	406	202	0	731	1513	1152	361
	6:00 PM	108	79	42	0	229	37	262	9	0	308	10	71	66	0	147	98	234	143	0	475	1159	783	376
	7:00 PM	0	0	0	0	0	0	0	0	0	0	0	0	0	0	0	0	0	0	0	0	0	0	0
	8:00 PM	0	0	0	0	0	0	0	0	0	0	0	0	0	0	0	0	0	0	0	0	0	0	0
	9:00 PM	0	0	0	0	0	0	0	0	0	0	0	0	0	0	0	0	0	0	0	0	0	0	0
Totals		1158	538	398	0	2094	327	3819	140	0	4286	181	575	858	0	1614	773	3839	1113	0	5725	13719	10011	3708

Graphical Summary of Hourly Volumes

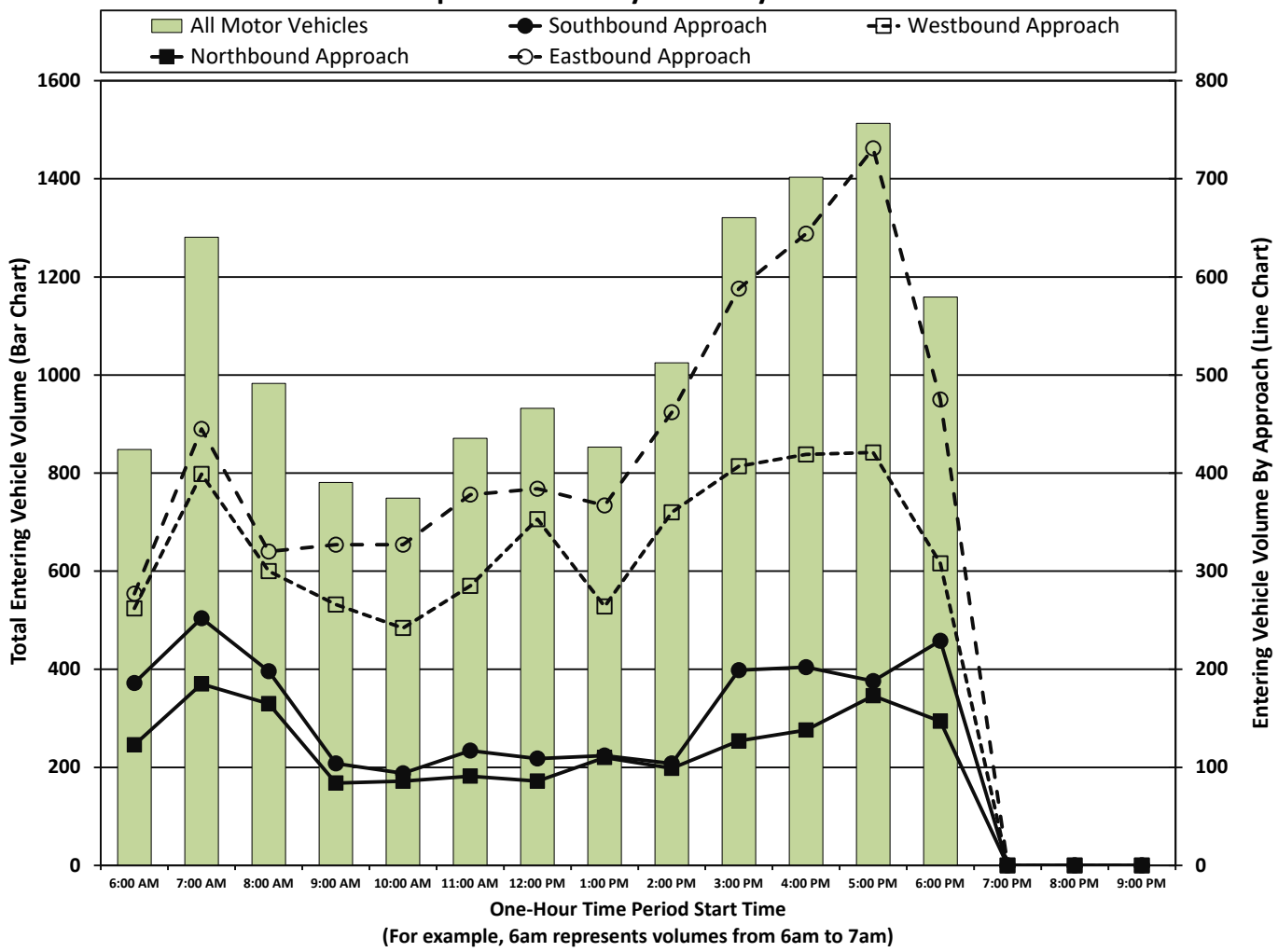

Intersection Traffic Volume Report

Count Basics			*Page 5 of 11*
Start Date:	Wednesday, October 18, 2017	Weekday	Schools in Session
Total Number of Hours Counted: 13		Non-Holiday	No Special Events

15-Minute Motor Vehicle Data

All Motor Vehicles

Jackson Drive and STH 60

15-Minute Motor Vehicle Data

	15-Minute Time Period Start Time	From North (Jackson Drive) Right	Thru	Left	U-Tn	Total	From East (STH 60) Right	Thru	Left	U-Tn	Total	From South (Jackson Drive) Right	Thru	Left	U-Tn	Total	From West (STH 60) Right	Thru	Left	U-Tn	Total	15-Min Totals	Hourly Sum	PHF
AM Peak Period	6:00 AM	21	7	3	0	31	0	34	0	0	34	1	2	14	0	17	2	47	4	0	53	135	848	0.82
	6:15 AM	37	3	10	0	50	1	67	5	0	73	6	7	17	0	30	3	57	6	0	66	219	1017	0.84
	6:30 AM	26	4	7	0	37	3	76	1	0	80	8	10	14	0	32	9	66	10	0	85	234	1130	0.85
	6:45 AM	48	9	11	0	68	12	62	1	0	75	3	16	25	0	44	10	48	15	0	73	260	1227	0.92
	7:00 AM	50	8	8	0	66	2	80	4	0	86	5	17	29	0	51	6	77	18	0	101	304	1281	0.96
	7:15 AM	46	6	15	0	67	6	103	2	0	111	6	6	25	0	37	3	95	19	0	117	332	1211	0.91
	7:30 AM	42	3	12	0	57	6	97	1	0	104	3	12	44	0	59	8	93	10	0	111	331	1102	0.83
	7:45 AM	42	9	11	0	62	7	89	2	0	98	8	17	13	0	38	13	78	25	0	116	314	1076	0.86
	8:00 AM	36	12	9	0	57	3	51	5	0	59	1	10	21	0	32	12	63	11	0	86	234	983	0.81
	8:15 AM	24	10	4	0	38	4	60	2	0	66	6	16	19	0	41	9	51	18	0	78	223	962	0.79
	8:30 AM	28	19	13	0	60	4	92	2	0	98	9	18	26	0	53	11	69	14	0	94	305	929	0.76
	8:45 AM	27	6	10	0	43	5	70	2	0	77	5	12	22	0	39	7	44	11	0	62	221	810	0.92
	9:00 AM	18	8	5	0	31	5	65	5	0	75	2	8	13	0	23	7	73	4	0	84	213	781	0.92
	9:15 AM	16	4	5	0	25	7	58	1	0	66	3	6	10	0	19	8	62	10	0	80	190	746	0.97
	9:30 AM	14	2	5	0	21	5	48	1	0	54	1	8	14	0	23	11	75	2	0	88	186	751	0.96
	9:45 AM	15	7	5	0	27	7	64	0	0	71	3	8	8	0	19	11	53	11	0	75	192	733	0.94
Midday Peak Period	10:00 AM	16	3	8	0	27	3	51	0	0	54	2	4	23	0	29	8	52	8	0	68	178	749	0.90
	10:15 AM	14	6	6	0	26	3	57	4	0	64	2	5	12	0	19	14	57	15	0	86	195	749	0.90
	10:30 AM	8	5	4	0	17	8	38	2	0	48	2	5	9	0	16	10	66	11	0	87	168	775	0.88
	10:45 AM	12	6	6	0	24	3	71	2	0	76	2	3	17	0	22	6	67	13	0	86	208	835	0.92
	11:00 AM	7	5	6	0	18	5	58	1	0	64	4	3	12	0	19	10	54	13	0	77	178	871	0.89
	11:15 AM	19	13	7	0	39	6	55	6	0	67	1	7	15	0	23	12	63	17	0	92	221	916	0.94
	11:30 AM	17	9	7	0	33	1	68	2	0	71	2	11	15	0	28	14	67	15	0	96	228	932	0.95
	11:45 AM	12	9	6	0	27	3	76	4	0	83	1	8	12	0	21	17	75	21	0	113	244	951	0.96
	12:00 PM	15	11	6	0	32	2	62	4	0	68	3	6	9	0	18	13	77	15	0	105	223	932	0.94
	12:15 PM	16	7	8	0	31	6	81	5	0	92	2	7	12	0	21	11	71	11	0	93	237	916	0.93
	12:30 PM	13	8	3	0	24	6	88	2	0	96	1	6	13	0	20	17	78	12	0	107	247	886	0.90
	12:45 PM	10	6	6	0	22	7	86	4	0	97	4	12	11	0	27	12	58	9	0	79	225	849	0.94
	1:00 PM	10	3	11	0	24	2	51	2	0	55	3	7	23	0	33	10	67	18	0	95	207	853	0.93
	1:15 PM	15	6	4	0	25	7	60	1	0	68	2	5	14	0	21	15	67	11	0	93	207	884	0.93
	1:30 PM	12	15	3	0	30	3	58	2	0	63	7	6	19	0	32	11	68	6	0	85	210	939	0.90
	1:45 PM	14	14	5	0	33	9	69	0	0	78	1	10	13	0	24	14	64	16	0	94	229	990	0.94
PM Peak Period	2:00 PM	16	8	3	0	27	4	78	3	0	85	2	5	14	0	21	18	68	19	0	105	238	1025	0.97
	2:15 PM	9	4	2	0	15	2	96	4	0	102	4	4	23	0	31	18	81	15	0	114	262	1081	0.92
	2:30 PM	15	4	7	0	26	5	77	0	0	82	3	6	19	0	28	10	97	18	0	125	261	1121	0.93
	2:45 PM	14	15	7	0	36	8	82	1	0	91	4	6	9	0	19	20	77	21	0	118	264	1244	0.81
	3:00 PM	17	4	7	0	28	9	85	2	0	96	5	13	6	0	24	13	94	39	0	146	294	1321	0.86
	3:15 PM	19	15	6	0	40	8	79	7	0	94	3	9	9	0	21	22	86	39	0	147	302	1352	0.88
	3:30 PM	37	28	16	0	81	3	102	6	0	111	5	19	19	0	43	20	99	30	0	149	384	1420	0.92
	3:45 PM	28	13	9	0	50	10	92	4	0	106	6	16	17	0	39	18	90	38	0	146	341	1373	0.93
	4:00 PM	28	14	8	0	50	7	93	4	0	104	3	16	10	0	29	17	90	35	0	142	325	1403	0.95
	4:15 PM	26	16	13	0	55	9	109	2	0	120	5	11	16	0	32	23	100	40	0	163	370	1476	0.93
	4:30 PM	32	18	9	0	59	8	78	3	0	89	5	14	17	0	36	23	98	32	0	153	337	1514	0.93
	4:45 PM	21	9	8	0	38	12	92	2	0	106	2	21	18	0	41	26	117	43	0	186	371	1524	0.93
	5:00 PM	23	18	13	0	54	12	89	3	0	104	4	16	16	0	36	33	128	43	0	204	398	1513	0.93
	5:15 PM	29	15	8	0	52	17	87	5	0	109	4	23	17	0	44	36	108	59	0	203	408	1456	0.89
	5:30 PM	18	18	8	0	44	17	77	2	0	96	3	20	16	0	39	29	88	51	0	168	347	1377	0.96
	5:45 PM	18	17	3	0	38	8	96	8	0	112	4	27	23	0	54	25	82	49	0	156	360	1287	0.89
	6:00 PM	23	22	8	0	53	10	65	3	0	78	1	31	22	0	54	30	69	57	0	156	341	1159	0.85
	6:15 PM	29	28	14	0	71	13	76	3	0	92	4	23	13	0	40	30	60	36	0	126	329		
	6:30 PM	32	14	15	0	61	3	63	1	0	67	0	11	14	0	25	22	57	25	0	104	257		
	6:45 PM	24	15	5	0	44	11	58	2	0	71	5	6	17	0	28	16	48	25	0	89	232		
	7:00 PM	0	0	0	0	0	0	0	0	0	0	0	0	0	0	0	0	0	0	0	0	0		
	7:15 PM	0	0	0	0	0	0	0	0	0	0	0	0	0	0	0	0	0	0	0	0	0		
	7:30 PM	0	0	0	0	0	0	0	0	0	0	0	0	0	0	0	0	0	0	0	0	0		
	7:45 PM	0	0	0	0	0	0	0	0	0	0	0	0	0	0	0	0	0	0	0	0	0		
	8:00 PM	0	0	0	0	0	0	0	0	0	0	0	0	0	0	0	0	0	0	0	0	0		
	8:15 PM	0	0	0	0	0	0	0	0	0	0	0	0	0	0	0	0	0	0	0	0	0		
	8:30 PM	0	0	0	0	0	0	0	0	0	0	0	0	0	0	0	0	0	0	0	0	0		
	8:45 PM	0	0	0	0	0	0	0	0	0	0	0	0	0	0	0	0	0	0	0	0	0		
	9:00 PM	0	0	0	0	0	0	0	0	0	0	0	0	0	0	0	0	0	0	0	0	0		
	9:15 PM	0	0	0	0	0	0	0	0	0	0	0	0	0	0	0	0	0	0	0	0	0		
	9:30 PM	0	0	0	0	0	0	0	0	0	0	0	0	0	0	0	0	0	0	0	0	0		
	9:45 PM	0	0	0	0	0	0	0	0	0	0	0	0	0	0	0	0	0	0	0	0	0		
Totals		1158	538	398	0	2094	327	3819	140	0	4286	181	575	858	0	1614	773	3839	1113	0	5725	13719		

Peak Hour All Vehicle Volume Summary

	Hourly Time Period Start Time	From North (Jackson Drive) Right	Thru	Left	U-Tn	Total	From East (STH 60) Right	Thru	Left	U-Tn	Total	From South (Jackson Drive) Right	Thru	Left	U-Tn	Total	From West (STH 60) Right	Thru	Left	U-Tn	Total	Total Hourly Volume	PHF
AM	7:00 AM	180	26	46	0	252	21	369	9	0	399	22	52	111	0	185	30	343	72	0	445	1281	0.96
MD	11:45 AM	56	35	23	0	114	17	307	15	0	339	7	27	46	0	80	58	301	59	0	418	951	0.96
PM	4:45 PM	91	60	37	0	188	58	345	12	0	415	13	80	67	0	160	124	441	196	0	761	1524	0.93

Intersection Traffic Volume Report

Count Basics	Version 2013.J4.1		Page 1 of 11
Start Date:	Saturday, February 22, 2020	Weekend	Schools Not in Session
Total Number of Hours Counted: 3		Non-Holiday	No Special Events

Base Information, Observed (3) Hour and Estimated (24) Hour Volume Summaries

Intersection of: Jackson St and STH 60

Site Information

Municipality	Village of Jackson		
County	Douglas	WisDOT Region	SE
Traffic Control	Traffic Signal		
Roadway Names		North Direction	↑
North Leg	Jackson St		
East Leg	STH 60		
South Leg	Jackson St		
West Leg	STH 60		
Special Considerations			
Schools	Not in Session		
Holidays	None		
Special Events	None		
Special Pedestrians Observed			
Pre-school children	None		
Elementry school age children	None		
Visually impaired (white cane/helper dog)	None		
Elderly/disabled (except wheelchairs)	None		
Wheelchairs/electric scooters	None		
Other (describe)	None	None	

Count Information

Hrs Counted:	11:00 AM-2:00 PM				
1st Day of Count	Saturday, February 22, 2020			Weather	
AM Peak Period					
Midday Peak Period	Saturday, February 22, 2020			Cloudy & Dry	
PM Peak Period					
Calculated Peak Hours					
AM		MD	11:00-12:00am	PM	
Peak Hours Selected for Analysis					
AM	7:00-8:00am	MD	11:00-12:00am	PM	4:45-5:45pm
Daily/Seasonal Adjustment Group					
Count Expansion Group					
Daily/Seasonal Adjustment Factor	1		Count Expansion Factor	#N/A	
Company Name	SRF Consulting, Inc.			Manual Adj.	1.000
Observers	AM Peak Period	Matt Flanagan			
	Midday Peak Period	Matt Flanagan			
	PM Peak Period	Matt Flanagan			
Comments					

Observed 3 Hour Volume Summary

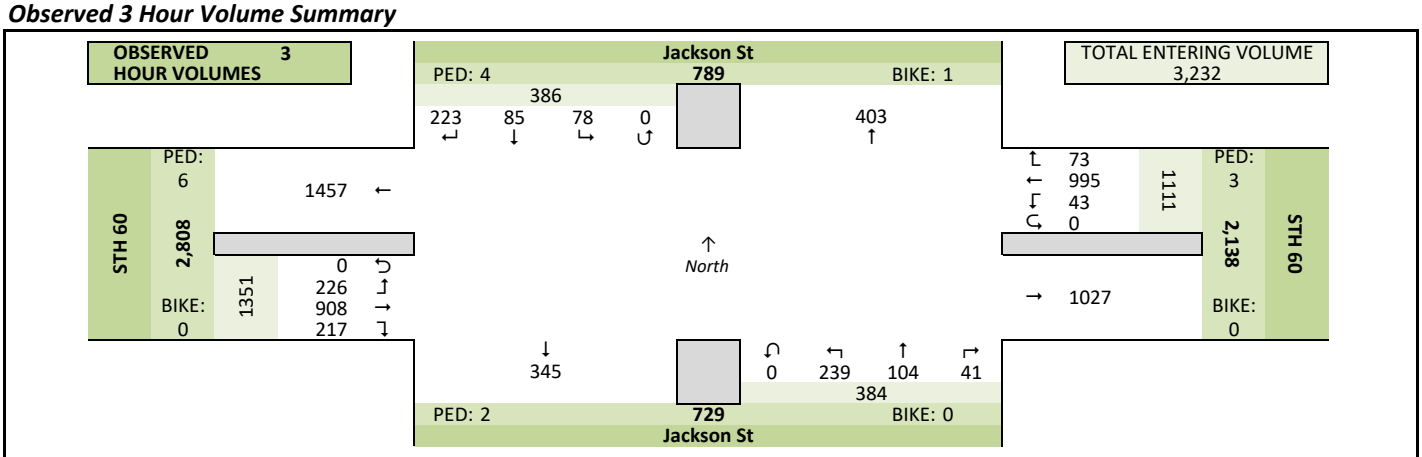

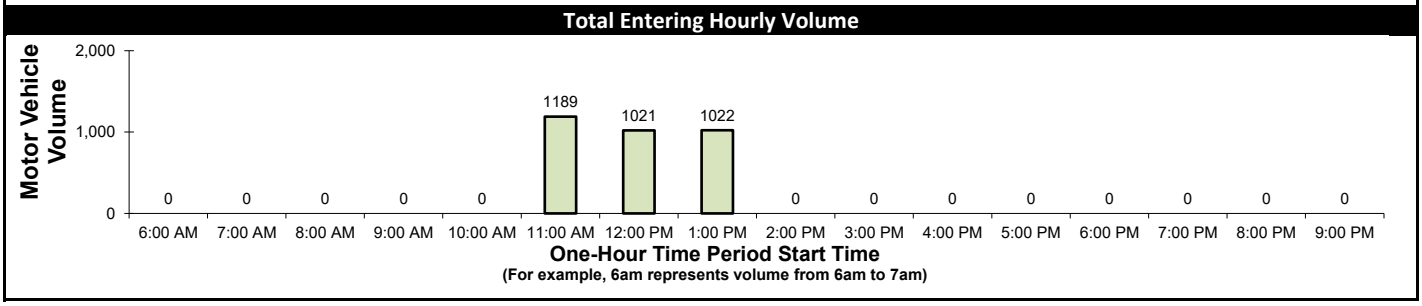

Estimated 24 Hour AADT

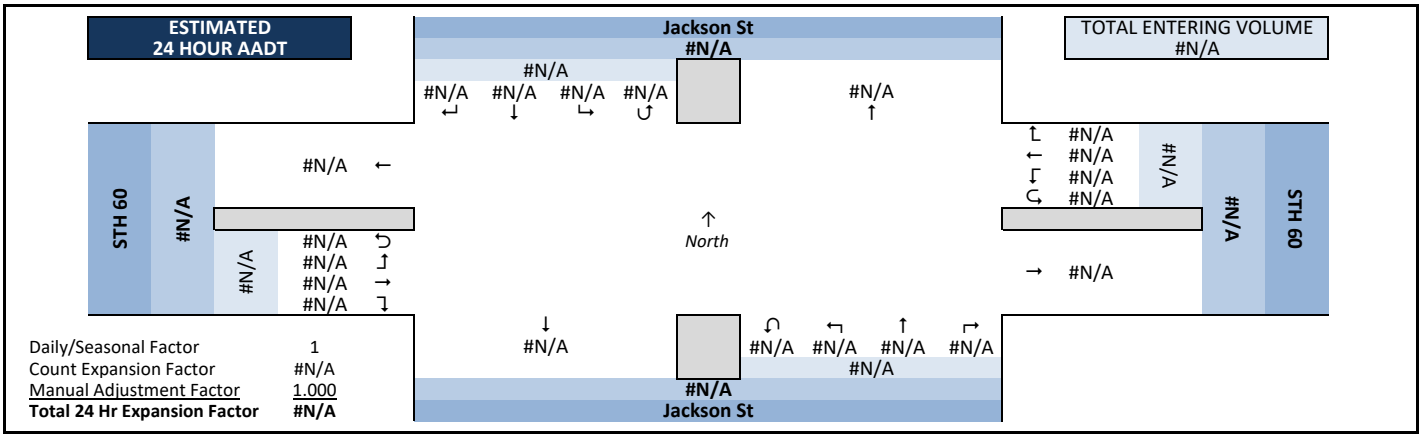
ESTIMATED 24 HOUR AADT
Jackson St
#N/A
TOTAL ENTERING VOLUME
#N/A
STH 60
#N/A
#N/A
#N/A

Intersection Traffic Volume Report

Count Basics			Page 2 of 11
Start Date:	Saturday, February 22, 2020	Weekend	Schools Not in Session
Total Number of Hours Counted: 3		Non-Holiday	No Special Events

Peak Hour Volume Graphical Summary

All Motor Vehicles

Jackson St and STH 60

AM Peak Hour Summary

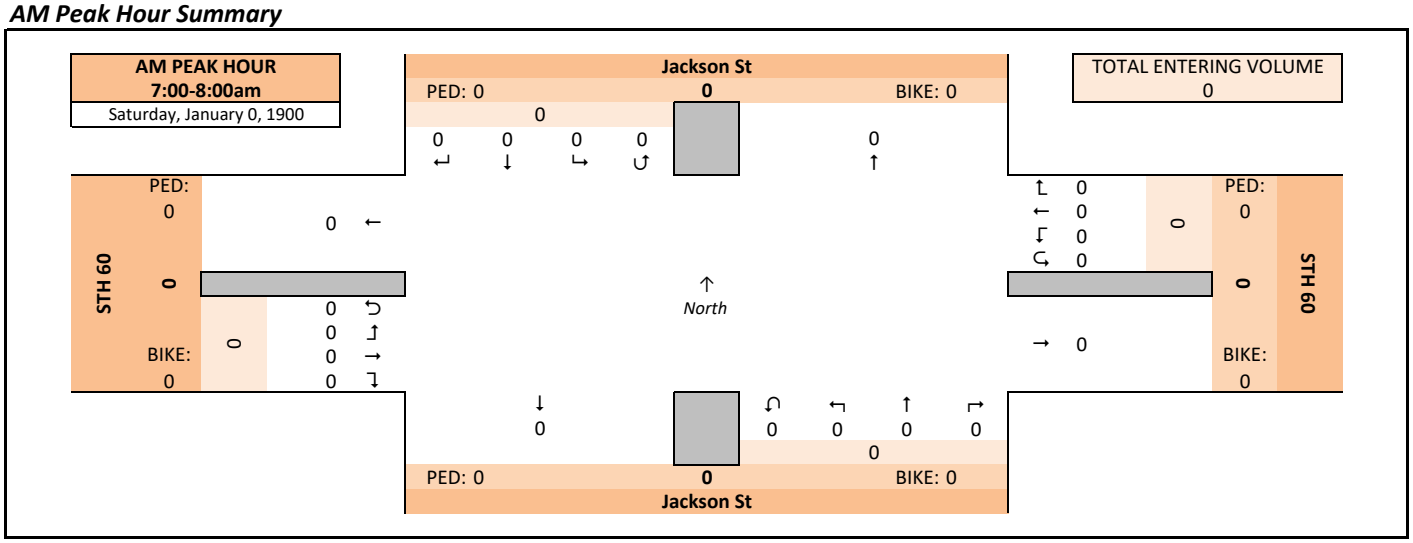

Midday (MD) Peak Hour Summary

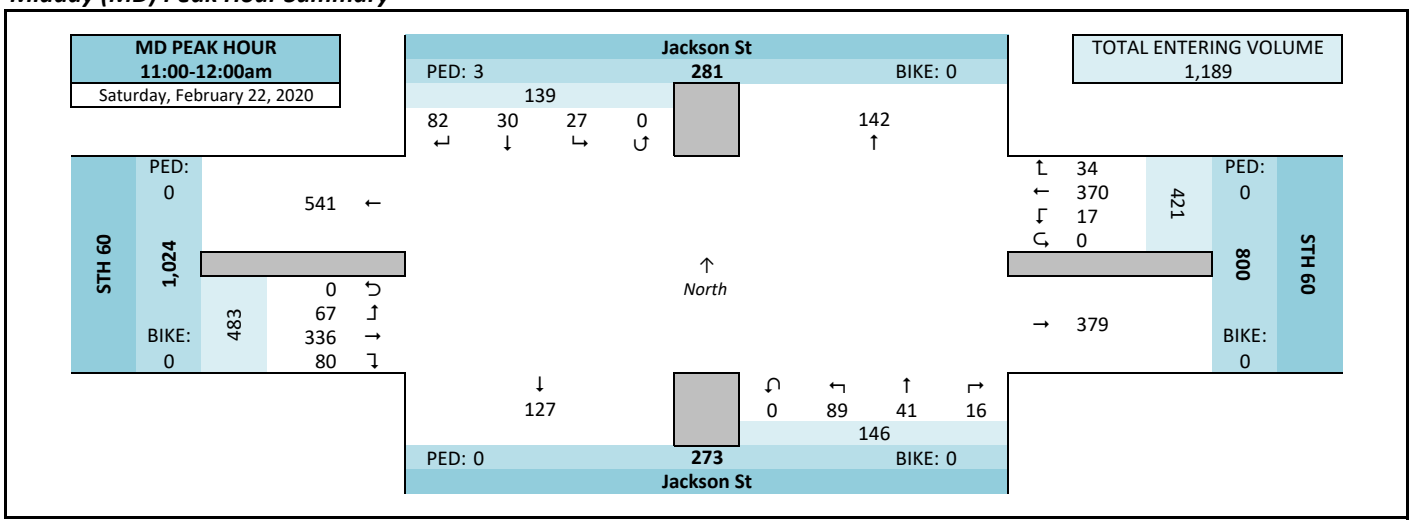

PM Peak Hour Summary

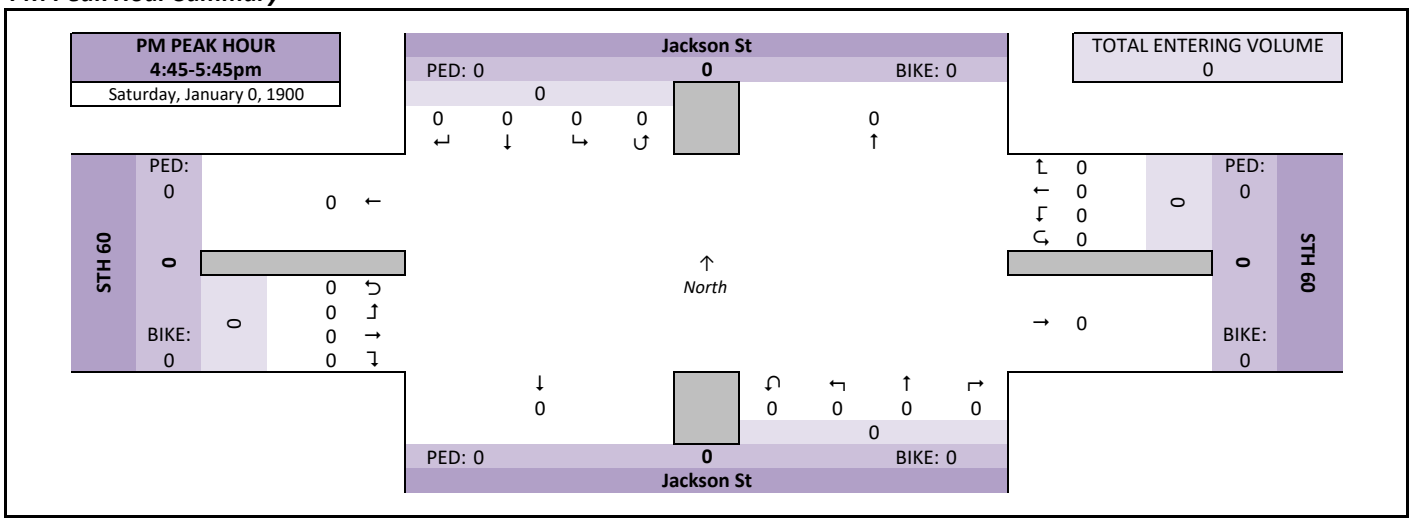

Intersection Traffic Volume Report

Count Basics			Page 3 of 11
Start Date:	Saturday, February 22, 2020	Weekend	Schools Not in Session
Total Number of Hours Counted: 3		Non-Holiday	No Special Events

Peak Hour Volume Summary

All Motor Vehicles

Jackson St and STH 60

Peak Hour Volumes, Truck Percentages, and PHFs

Saturday, January 0, 1900		From North					From East					From South					From West					
	AM Peak Hour	Jackson St					STH 60					Jackson St					STH 60					
	Start Time	Right	Thru	Left	U-Tn	Total	Right	Thru	Left	U-Tn	Total	Right	Thru	Left	U-Tn	Total	Right	Thru	Left	U-Tn	Total	Totals
AM Peak Hour	7:00 AM	0	0	0	0	0	0	0	0	0	0	0	0	0	0	0	0	0	0	0	0	0
	7:15 AM	0	0	0	0	0	0	0	0	0	0	0	0	0	0	0	0	0	0	0	0	0
	7:30 AM	0	0	0	0	0	0	0	0	0	0	0	0	0	0	0	0	0	0	0	0	0
	7:45 AM	0	0	0	0	0	0	0	0	0	0	0	0	0	0	0	0	0	0	0	0	0
	Peak Hour Volume	0	0	0	0	0	0	0	0	0	0	0	0	0	0	0	0	0	0	0	0	0
	Rounded Hourly Volume	0	0	0	0	0	0	0	0	0	0	0	0	0	0	0	0	0	0	0	0	0
	% Single Unit Trucks	0.0	0.0	0.0	0.0	0.0	0.0	0.0	0.0	0.0	0.0	0.0	0.0	0.0	0.0	0.0	0.0	0.0	0.0	0.0	0.0	0.0
	% Heavy Trucks	0.0	0.0	0.0	0.0	0.0	0.0	0.0	0.0	0.0	0.0	0.0	0.0	0.0	0.0	0.0	0.0	0.0	0.0	0.0	0.0	0.0
	% Trucks (Total)	0.0	0.0	0.0	0.0	0.0	0.0	0.0	0.0	0.0	0.0	0.0	0.0	0.0	0.0	0.0	0.0	0.0	0.0	0.0	0.0	0.0
	Peak Hour Factor (PHF)	0.00	0.00	0.00	0.00	0.00	0.00	0.00	0.00	0.00	0.00	0.00	0.00	0.00	0.00	0.00	0.00	0.00	0.00	0.00	0.00	0.00

Saturday, February 22, 2020		From North					From East					From South					From West					
	MD Peak Hour	Jackson St					STH 60					Jackson St					STH 60					
	Start Time	Right	Thru	Left	U-Tn	Total	Right	Thru	Left	U-Tn	Total	Right	Thru	Left	U-Tn	Total	Right	Thru	Left	U-Tn	Total	Totals
Midday (MD) Peak Hour	11:00 AM	15	8	5	0	28	11	103	6	0	120	4	4	21	0	29	17	95	14	0	126	303
	11:15 AM	23	7	4	0	34	7	92	7	0	106	4	9	24	0	37	25	81	19	0	125	302
	11:30 AM	19	6	8	0	33	11	88	3	0	102	4	16	24	0	44	21	80	16	0	117	296
	11:45 AM	25	9	10	0	44	5	87	1	0	93	4	12	20	0	36	17	80	18	0	115	288
	Peak Hour Volume	82	30	27	0	139	34	370	17	0	421	16	41	89	0	146	80	336	67	0	483	1189
	Rounded Hourly Volume	80	30	25	0	135	35	370	15	0	420	15	40	90	0	145	80	335	65	0	480	1180
	% Single Unit Trucks	2.4	3.3	0.0	0.0	2.2	0.0	2.2	0.0	0.0	1.9	0.0	2.4	1.1	0.0	1.4	1.2	1.5	0.0	0.0	1.2	1.6
	% Heavy Trucks	0.0	0.0	0.0	0.0	0.0	0.0	0.5	0.0	0.0	0.5	0.0	0.0	0.0	0.0	0.0	0.0	1.2	0.0	0.0	0.8	0.5
	% Trucks (Total)	2.4	3.3	0.0	0.0	2.2	0.0	2.7	0.0	0.0	2.4	0.0	2.4	1.1	0.0	1.4	1.2	2.7	0.0	0.0	2.1	2.1
	Peak Hour Factor (PHF)	0.82	0.83	0.67	0.00	0.79	0.77	0.90	0.61	0.00	0.88	1.00	0.64	0.93	0.00	0.83	0.80	0.88	0.88	0.00	0.96	0.98

Saturday, January 0, 1900		From North					From East					From South					From West					
	PM Peak Hour	Jackson St					STH 60					Jackson St					STH 60					
	Start Time	Right	Thru	Left	U-Tn	Total	Right	Thru	Left	U-Tn	Total	Right	Thru	Left	U-Tn	Total	Right	Thru	Left	U-Tn	Total	Totals
PM Peak Hour	4:45 PM	0	0	0	0	0	0	0	0	0	0	0	0	0	0	0	0	0	0	0	0	0
	5:00 PM	0	0	0	0	0	0	0	0	0	0	0	0	0	0	0	0	0	0	0	0	0
	5:15 PM	0	0	0	0	0	0	0	0	0	0	0	0	0	0	0	0	0	0	0	0	0
	5:30 PM	0	0	0	0	0	0	0	0	0	0	0	0	0	0	0	0	0	0	0	0	0
	Peak Hour Volume	0	0	0	0	0	0	0	0	0	0	0	0	0	0	0	0	0	0	0	0	0
	Rounded Hourly Volume	0	0	0	0	0	0	0	0	0	0	0	0	0	0	0	0	0	0	0	0	0
	% Single Unit Trucks	0.0	0.0	0.0	0.0	0.0	0.0	0.0	0.0	0.0	0.0	0.0	0.0	0.0	0.0	0.0	0.0	0.0	0.0	0.0	0.0	0.0
	% Heavy Trucks	0.0	0.0	0.0	0.0	0.0	0.0	0.0	0.0	0.0	0.0	0.0	0.0	0.0	0.0	0.0	0.0	0.0	0.0	0.0	0.0	0.0
	% Trucks (Total)	0.0	0.0	0.0	0.0	0.0	0.0	0.0	0.0	0.0	0.0	0.0	0.0	0.0	0.0	0.0	0.0	0.0	0.0	0.0	0.0	0.0
	Peak Hour Factor (PHF)	0.00	0.00	0.00	0.00	0.00	0.00	0.00	0.00	0.00	0.00	0.00	0.00	0.00	0.00	0.00	0.00	0.00	0.00	0.00	0.00	0.00

Peak Hour Pedestrian and Bicyclist Volumes

Pedestrians and Bicyclists		Crossing North Approach			Crossing East Approach			Crossing South Approach			Crossing West Approach			Total Ped & Bike Volume
		Jackson St			STH 60			Jackson St			STH 60			
	15-Minute Start Time	Pedestrian	Bicyclist	Total	Pedestrian	Bicyclist	Total	Pedestrian	Bicyclist	Total	Pedestrian	Bicyclist	Total	
AM	7:00 AM	0	0	0	0	0	0	0	0	0	0	0	0	0
	7:15 AM	0	0	0	0	0	0	0	0	0	0	0	0	0
	7:30 AM	0	0	0	0	0	0	0	0	0	0	0	0	0
	7:45 AM	0	0	0	0	0	0	0	0	0	0	0	0	0
	Total	0	0	0	0	0	0	0	0	0	0	0	0	0
MD	11:00 AM	3	0	3	0	0	0	0	0	0	0	0	0	3
	11:15 AM	0	0	0	0	0	0	0	0	0	0	0	0	0
	11:30 AM	0	0	0	0	0	0	0	0	0	0	0	0	0
	11:45 AM	0	0	0	0	0	0	0	0	0	0	0	0	0
	Total	3	0	3	0	0	0	0	0	0	0	0	0	3
PM	4:45 PM	0	0	0	0	0	0	0	0	0	0	0	0	0
	5:00 PM	0	0	0	0	0	0	0	0	0	0	0	0	0
	5:15 PM	0	0	0	0	0	0	0	0	0	0	0	0	0
	5:30 PM	0	0	0	0	0	0	0	0	0	0	0	0	0
	Total	0	0	0	0	0	0	0	0	0	0	0	0	0

Intersection Traffic Volume Report

Count Basics			Page 4 of 11
Start Date:	Saturday, February 22, 2020	Weekend	Schools Not in Session
Total Number of Hours Counted: 3		Non-Holiday	No Special Events

Hourly Volume Summary - Motor Vehicle Data

All Motor Vehicles

Jackson St and STH 60

One-Hour Motor Vehicle Data

One-Hour Time Period Start Time		From North (Jackson St)					From East (STH 60)					From South (Jackson St)					From West (STH 60)					Total Vehicle Volume	Directional Volume Totals	
		Right	Thru	Left	U-Tn	Total	Right	Thru	Left	U-Tn	Total	Right	Thru	Left	U-Tn	Total	Right	Thru	Left	U-Tn	Total		E/W	N/S
AM	6:00 AM	0	0	0	0	0	0	0	0	0	0	0	0	0	0	0	0	0	0	0	0	0	0	0
	7:00 AM	0	0	0	0	0	0	0	0	0	0	0	0	0	0	0	0	0	0	0	0	0	0	0
	8:00 AM	0	0	0	0	0	0	0	0	0	0	0	0	0	0	0	0	0	0	0	0	0	0	0
	9:00 AM	0	0	0	0	0	0	0	0	0	0	0	0	0	0	0	0	0	0	0	0	0	0	0
MD	10:00 AM	0	0	0	0	0	0	0	0	0	0	0	0	0	0	0	0	0	0	0	0	0	0	0
	11:00 AM	82	30	27	0	139	34	370	17	0	421	16	41	89	0	146	80	336	67	0	483	1189	904	285
	12:00 PM	74	27	29	0	130	16	322	13	0	351	12	31	73	0	116	66	287	71	0	424	1021	775	246
	1:00 PM	67	28	22	0	117	23	303	13	0	339	13	32	77	0	122	71	285	88	0	444	1022	783	239
PM	2:00 PM	0	0	0	0	0	0	0	0	0	0	0	0	0	0	0	0	0	0	0	0	0	0	0
	3:00 PM	0	0	0	0	0	0	0	0	0	0	0	0	0	0	0	0	0	0	0	0	0	0	0
	4:00 PM	0	0	0	0	0	0	0	0	0	0	0	0	0	0	0	0	0	0	0	0	0	0	0
	5:00 PM	0	0	0	0	0	0	0	0	0	0	0	0	0	0	0	0	0	0	0	0	0	0	0
	6:00 PM	0	0	0	0	0	0	0	0	0	0	0	0	0	0	0	0	0	0	0	0	0	0	0
	7:00 PM	0	0	0	0	0	0	0	0	0	0	0	0	0	0	0	0	0	0	0	0	0	0	0
	8:00 PM	0	0	0	0	0	0	0	0	0	0	0	0	0	0	0	0	0	0	0	0	0	0	0
	9:00 PM	0	0	0	0	0	0	0	0	0	0	0	0	0	0	0	0	0	0	0	0	0	0	0
Totals		223	85	78	0	386	73	995	43	0	1111	41	104	239	0	384	217	908	226	0	1351	3232	2462	770

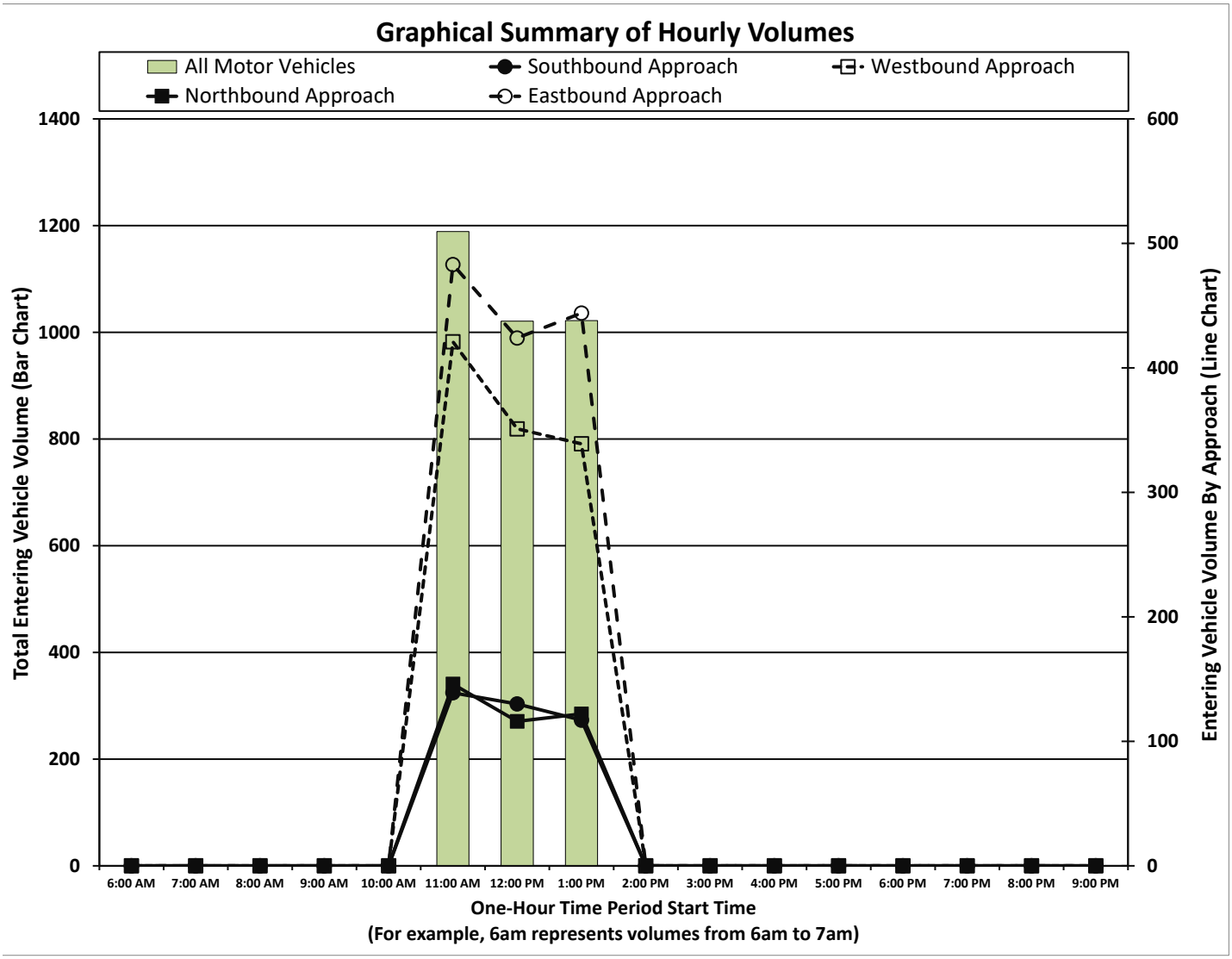

Intersection Traffic Volume Report

Count Basics		*Page 5 of 11*
Start Date: Saturday, February 22, 2020	Weekend	Schools Not in Session
Total Number of Hours Counted: 3	Non-Holiday	No Special Events

15-Minute Motor Vehicle Data

All Motor Vehicles

Jackson St and STH 60

15-Minute Motor Vehicle Data

15-Minute Time Period Start Time		From North (Jackson St) Right	Thru	Left	U-Tn	Total	From East (STH 60) Right	Thru	Left	U-Tn	Total	From South (Jackson St) Right	Thru	Left	U-Tn	Total	From West (STH 60) Right	Thru	Left	U-Tn	Total	15-Min Totals	Hourly Sum	PHF
AM Peak Period	6:00 AM	0	0	0	0	0	0	0	0	0	0	0	0	0	0	0	0	0	0	0	0	0		
	6:15 AM	0	0	0	0	0	0	0	0	0	0	0	0	0	0	0	0	0	0	0	0	0		
	6:30 AM	0	0	0	0	0	0	0	0	0	0	0	0	0	0	0	0	0	0	0	0	0		
	6:45 AM	0	0	0	0	0	0	0	0	0	0	0	0	0	0	0	0	0	0	0	0	0		
	7:00 AM	0	0	0	0	0	0	0	0	0	0	0	0	0	0	0	0	0	0	0	0	0		
	7:15 AM	0	0	0	0	0	0	0	0	0	0	0	0	0	0	0	0	0	0	0	0	0		
	7:30 AM	0	0	0	0	0	0	0	0	0	0	0	0	0	0	0	0	0	0	0	0	0		
	7:45 AM	0	0	0	0	0	0	0	0	0	0	0	0	0	0	0	0	0	0	0	0	0		
	8:00 AM	0	0	0	0	0	0	0	0	0	0	0	0	0	0	0	0	0	0	0	0	0		
	8:15 AM	0	0	0	0	0	0	0	0	0	0	0	0	0	0	0	0	0	0	0	0	0		
	8:30 AM	0	0	0	0	0	0	0	0	0	0	0	0	0	0	0	0	0	0	0	0	0		
	8:45 AM	0	0	0	0	0	0	0	0	0	0	0	0	0	0	0	0	0	0	0	0	0		
	9:00 AM	0	0	0	0	0	0	0	0	0	0	0	0	0	0	0	0	0	0	0	0	0		
	9:15 AM	0	0	0	0	0	0	0	0	0	0	0	0	0	0	0	0	0	0	0	0	0		
	9:30 AM	0	0	0	0	0	0	0	0	0	0	0	0	0	0	0	0	0	0	0	0	0		
	9:45 AM	0	0	0	0	0	0	0	0	0	0	0	0	0	0	0	0	0	0	0	0	0		
Midday Peak Period	10:00 AM	0	0	0	0	0	0	0	0	0	0	0	0	0	0	0	0	0	0	0	0	0		
	10:15 AM	0	0	0	0	0	0	0	0	0	0	0	0	0	0	0	0	0	0	0	0	0		
	10:30 AM	0	0	0	0	0	0	0	0	0	0	0	0	0	0	0	0	0	0	0	0	0		
	10:45 AM	0	0	0	0	0	0	0	0	0	0	0	0	0	0	0	0	0	0	0	0	0		
	11:00 AM	15	8	5	0	28	11	103	6	0	120	4	4	21	0	29	17	95	14	0	126	303	1189	0.98
	11:15 AM	23	7	4	0	34	7	92	7	0	106	4	9	24	0	37	25	81	19	0	125	302	1152	0.95
	11:30 AM	19	6	8	0	33	11	88	3	0	102	4	16	24	0	44	21	80	16	0	117	296	1115	0.94
	11:45 AM	25	9	10	0	44	5	87	1	0	93	4	12	20	0	36	17	80	18	0	115	288	1063	0.92
	12:00 PM	14	5	10	0	29	2	80	4	0	86	4	4	18	0	26	18	89	18	0	125	266	1021	0.96
	12:15 PM	32	8	7	0	47	3	87	5	0	95	3	11	14	0	28	17	62	16	0	95	265	965	0.91
	12:30 PM	11	6	5	0	22	9	76	1	0	86	3	10	20	0	33	14	75	14	0	103	244	953	0.94
	12:45 PM	17	8	7	0	32	2	79	3	0	84	2	6	21	0	29	17	61	23	0	101	246	992	0.88
	1:00 PM	15	1	7	0	23	3	59	4	0	66	6	6	18	0	30	14	53	24	0	91	210	1022	0.90
	1:15 PM	18	5	5	0	28	6	73	5	0	84	2	12	26	0	40	22	62	17	0	101	253		
	1:30 PM	20	11	4	0	35	4	91	0	0	95	1	5	9	0	15	11	101	26	0	138	283		
	1:45 PM	14	11	6	0	31	10	80	4	0	94	4	9	24	0	37	24	69	21	0	114	276		
PM Peak Period	2:00 PM	0	0	0	0	0	0	0	0	0	0	0	0	0	0	0	0	0	0	0	0	0		
	2:15 PM	0	0	0	0	0	0	0	0	0	0	0	0	0	0	0	0	0	0	0	0	0		
	2:30 PM	0	0	0	0	0	0	0	0	0	0	0	0	0	0	0	0	0	0	0	0	0		
	2:45 PM	0	0	0	0	0	0	0	0	0	0	0	0	0	0	0	0	0	0	0	0	0		
	3:00 PM	0	0	0	0	0	0	0	0	0	0	0	0	0	0	0	0	0	0	0	0	0		
	3:15 PM	0	0	0	0	0	0	0	0	0	0	0	0	0	0	0	0	0	0	0	0	0		
	3:30 PM	0	0	0	0	0	0	0	0	0	0	0	0	0	0	0	0	0	0	0	0	0		
	3:45 PM	0	0	0	0	0	0	0	0	0	0	0	0	0	0	0	0	0	0	0	0	0		
	4:00 PM	0	0	0	0	0	0	0	0	0	0	0	0	0	0	0	0	0	0	0	0	0		
	4:15 PM	0	0	0	0	0	0	0	0	0	0	0	0	0	0	0	0	0	0	0	0	0		
	4:30 PM	0	0	0	0	0	0	0	0	0	0	0	0	0	0	0	0	0	0	0	0	0		
	4:45 PM	0	0	0	0	0	0	0	0	0	0	0	0	0	0	0	0	0	0	0	0	0		
	5:00 PM	0	0	0	0	0	0	0	0	0	0	0	0	0	0	0	0	0	0	0	0	0		
	5:15 PM	0	0	0	0	0	0	0	0	0	0	0	0	0	0	0	0	0	0	0	0	0		
	5:30 PM	0	0	0	0	0	0	0	0	0	0	0	0	0	0	0	0	0	0	0	0	0		
	5:45 PM	0	0	0	0	0	0	0	0	0	0	0	0	0	0	0	0	0	0	0	0	0		
	6:00 PM	0	0	0	0	0	0	0	0	0	0	0	0	0	0	0	0	0	0	0	0	0		
	6:15 PM	0	0	0	0	0	0	0	0	0	0	0	0	0	0	0	0	0	0	0	0	0		
	6:30 PM	0	0	0	0	0	0	0	0	0	0	0	0	0	0	0	0	0	0	0	0	0		
	6:45 PM	0	0	0	0	0	0	0	0	0	0	0	0	0	0	0	0	0	0	0	0	0		
	7:00 PM	0	0	0	0	0	0	0	0	0	0	0	0	0	0	0	0	0	0	0	0	0		
	7:15 PM	0	0	0	0	0	0	0	0	0	0	0	0	0	0	0	0	0	0	0	0	0		
	7:30 PM	0	0	0	0	0	0	0	0	0	0	0	0	0	0	0	0	0	0	0	0	0		
	7:45 PM	0	0	0	0	0	0	0	0	0	0	0	0	0	0	0	0	0	0	0	0	0		
	8:00 PM	0	0	0	0	0	0	0	0	0	0	0	0	0	0	0	0	0	0	0	0	0		
	8:15 PM	0	0	0	0	0	0	0	0	0	0	0	0	0	0	0	0	0	0	0	0	0		
	8:30 PM	0	0	0	0	0	0	0	0	0	0	0	0	0	0	0	0	0	0	0	0	0		
	8:45 PM	0	0	0	0	0	0	0	0	0	0	0	0	0	0	0	0	0	0	0	0	0		
	9:00 PM	0	0	0	0	0	0	0	0	0	0	0	0	0	0	0	0	0	0	0	0	0		
	9:15 PM	0	0	0	0	0	0	0	0	0	0	0	0	0	0	0	0	0	0	0	0	0		
	9:30 PM	0	0	0	0	0	0	0	0	0	0	0	0	0	0	0	0	0	0	0	0	0		
	9:45 PM	0	0	0	0	0	0	0	0	0	0	0	0	0	0	0	0	0	0	0	0	0		
Totals		223	85	78	0	386	73	995	43	0	1111	41	104	239	0	384	217	908	226	0	1351	3232		

Peak Hour All Vehicle Volume Summary

Hourly Time Period Start Time		From North (Jackson St) Right	Thru	Left	U-Tn	Total	From East (STH 60) Right	Thru	Left	U-Tn	Total	From South (Jackson St) Right	Thru	Left	U-Tn	Total	From West (STH 60) Right	Thru	Left	U-Tn	Total	Total Hourly Volume	PHF
AM	7:00 AM	0	0	0	0	0	0	0	0	0	0	0	0	0	0	0	0	0	0	0	0	0	
MD	11:00 AM	82	30	27	0	139	34	370	17	0	421	16	41	89	0	146	80	336	67	0	483	1189	0.98
PM	4:45 PM	0	0	0	0	0	0	0	0	0	0	0	0	0	0	0	0	0	0	0	0	0	

Intersection Traffic Volume Report

Count Basics	Version 2013.J4.1		Page 1 of 11
Start Date:	Wednesday, February 12, 2020	Weekday/Weekend	Schools in Session
Total Number of Hours Counted: 9		Non-Holiday	No Special Events

Base Information, Observed (9) Hour and Estimated (24) Hour Volume Summaries

Intersection of: Ridgeway Rd and STH 60

Site Information

Municipality	Village of Jackson		
County	Douglas	WisDOT Region	SE
Traffic Control	Partial Stop Control		
Roadway Names		North Direction	↑
North Leg	Ridgeway Rd		
East Leg	STH 60		
South Leg	N/A		
West Leg	STH 60		
Special Considerations			
Schools	In Session		
Holidays	None		
Special Events	None		
Special Pedestrians Observed			
Pre-school children		None	
Elementry school age children		None	
Visually impaired (white cane/helper dog)		None	
Elderly/disabled (except wheelchairs)		None	
Wheelchairs/electric scooters		None	
Other (describe)	None	None	

Count Information

Hrs Counted:	6:00 AM-9:00 AM, 11:00 AM-2:00 PM, and 3:00 PM-6:00 PM				
1st Day of Count	Wednesday, February 12, 2020			Weather	
AM Peak Period	Wednesday, February 12, 2020			Cloudy & Dry	
Midday Peak Period	Saturday, February 22, 2020			Cloudy & Dry	
PM Peak Period	Wednesday, February 12, 2020			Cloudy & Dry	
Calculated Peak Hours					
AM	6:45-7:45am	MD	11:00-12:00am	PM	4:30-5:30pm
Peak Hours Selected for Analysis					
AM	7:00-8:00am	MD	11:00-12:00am	PM	4:45-5:45pm
Daily/Seasonal Adjustment Group					
Count Expansion Group					
Daily/Seasonal Adjustment Factor	1		Count Expansion Factor	#N/A	
Company Name	SRF Consulting, Inc.			Manual Adj.	1.000
Observers	AM Peak Period	Matt Flanagan/Gabby Hellman			
	Midday Peak Period	Matt Flanagan/Gabby Hellman			
	PM Peak Period	Matt Flanagan/Gabby Hellman			
Comments					

Observed 9 Hour Volume Summary

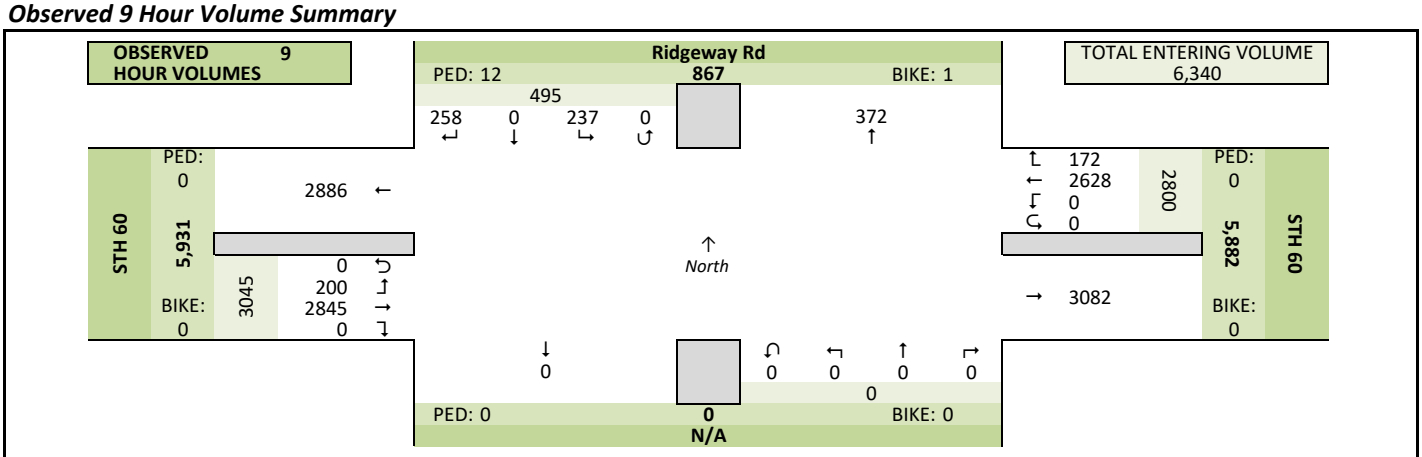

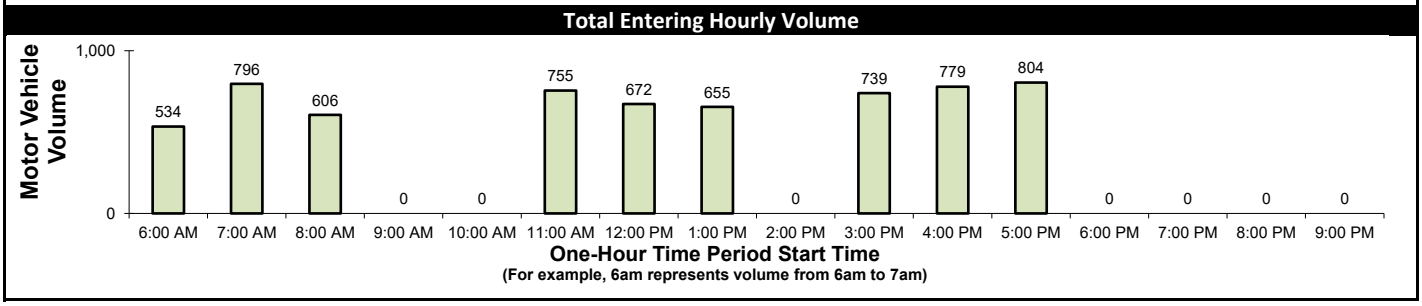

Estimated 24 Hour AADT

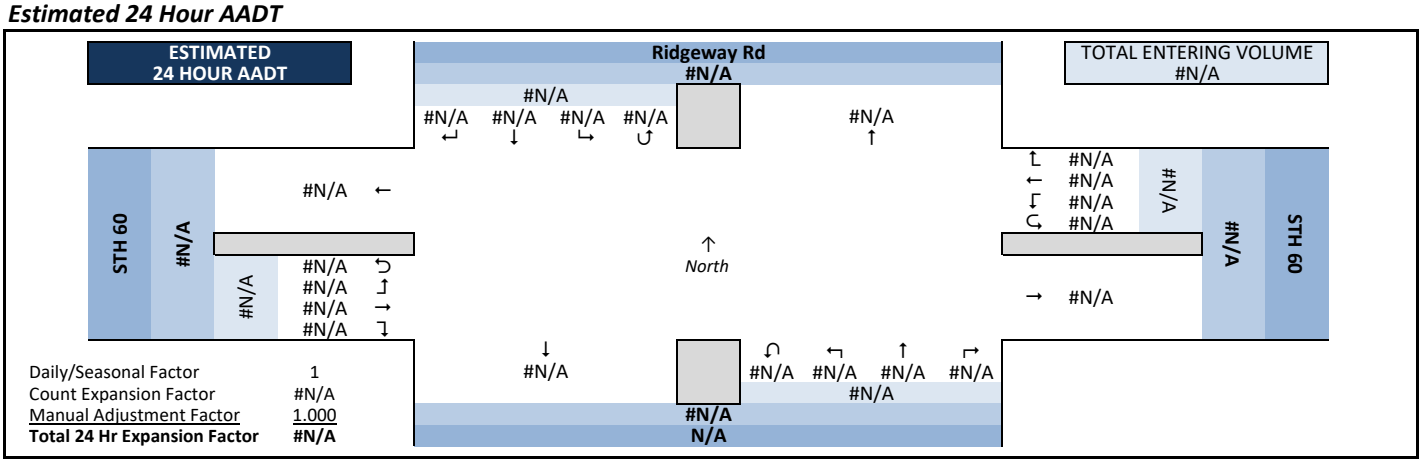

Daily/Seasonal Factor	1
Count Expansion Factor	#N/A
Manual Adjustment Factor	1.000
Total 24 Hr Expansion Factor	**#N/A**

Intersection Traffic Volume Report

Count Basics			Page 2 of 11
Start Date:	Wednesday, February 12, 2020	Weekday/Weekend	Schools in Session
Total Number of Hours Counted: 9		Non-Holiday	No Special Events

Peak Hour Volume Graphical Summary

All Motor Vehicles

Ridgeway Rd and STH 60

AM Peak Hour Summary

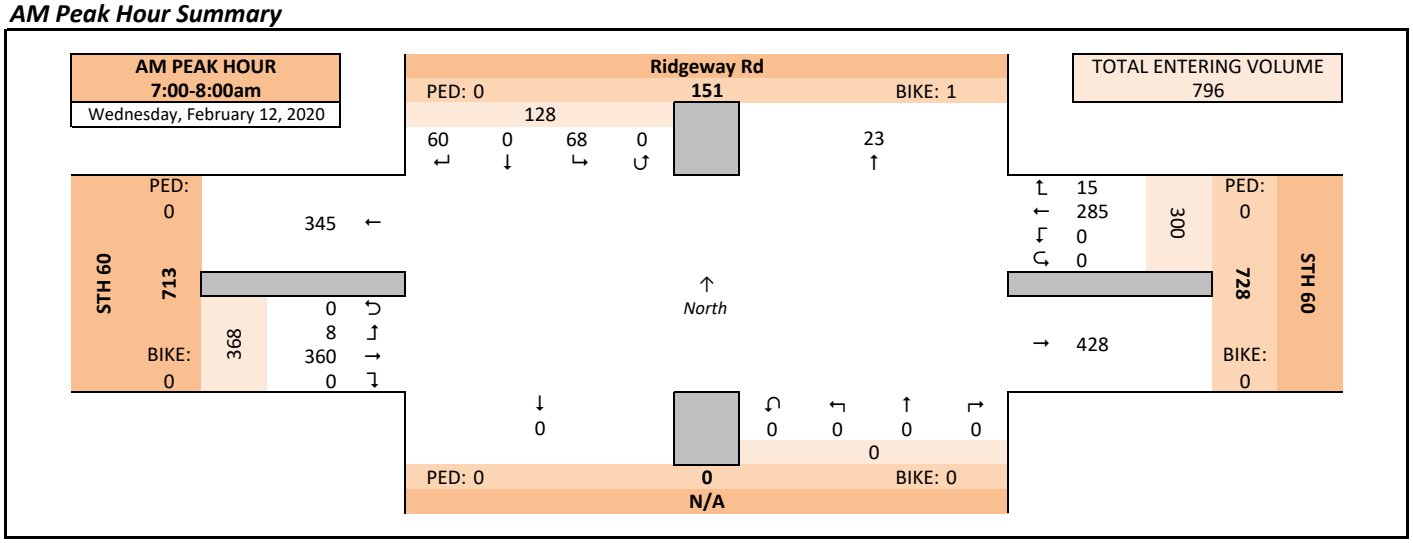

Midday (MD) Peak Hour Summary

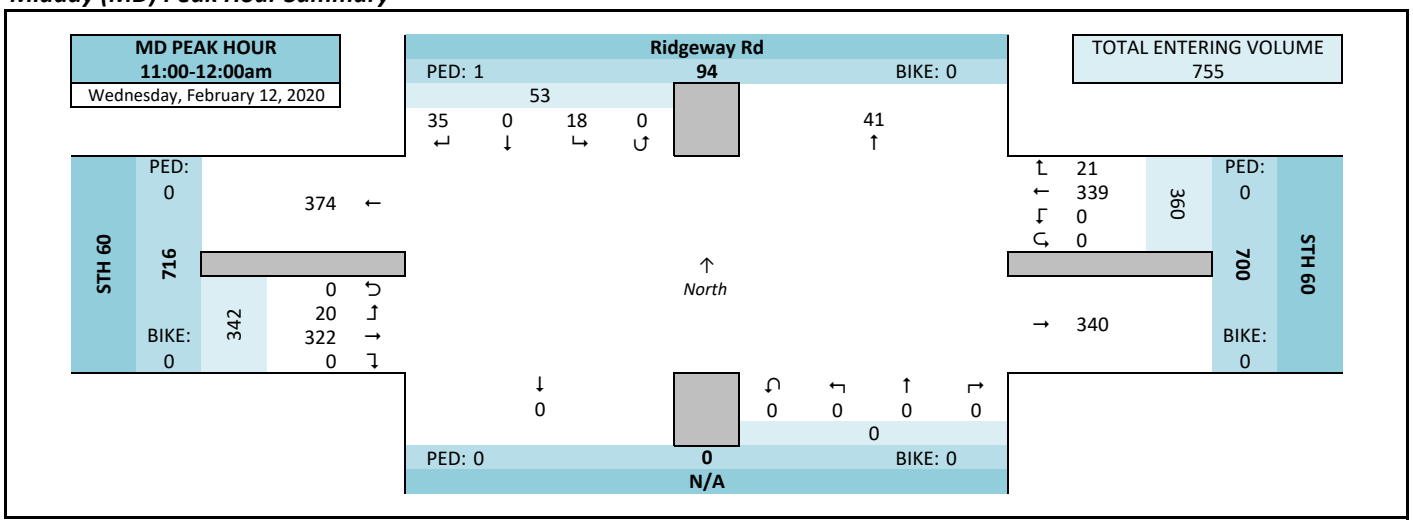

PM Peak Hour Summary

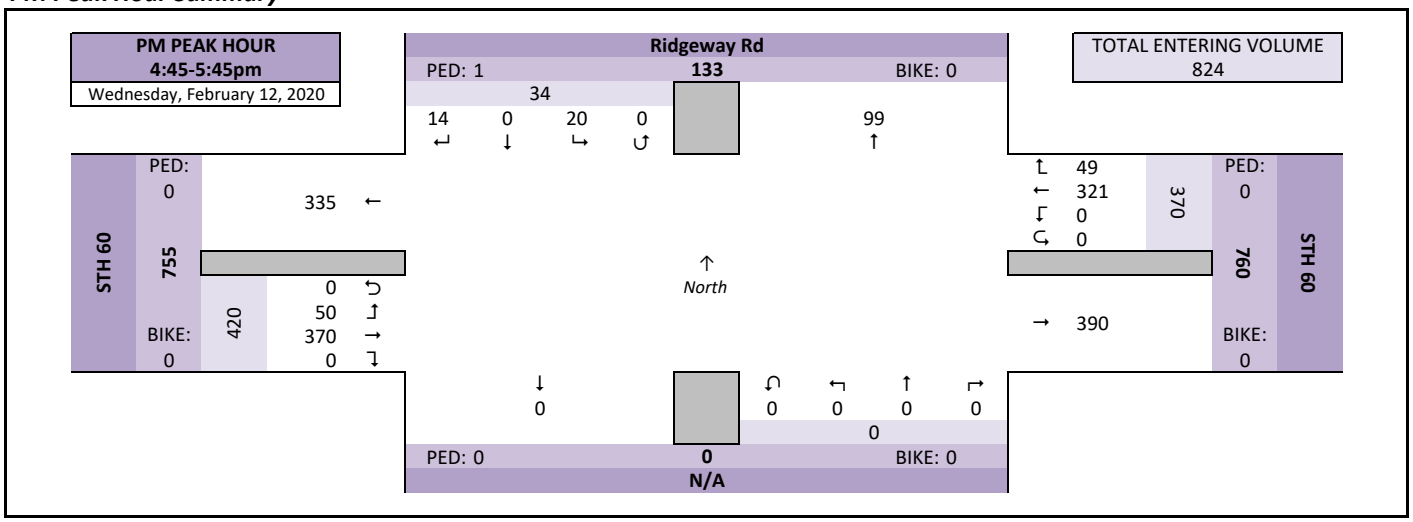

Intersection Traffic Volume Report

Count Basics			Page 3 of 11
Start Date:	Wednesday, February 12, 2020	Weekday/Weekend	Schools in Session
Total Number of Hours Counted: 9		Non-Holiday	No Special Events

Peak Hour Volume Summary

All Motor Vehicles

Ridgeway Rd and STH 60

Peak Hour Volumes, Truck Percentages, and PHFs

Wednesday, February 12, 2020		From North					From East					From South					From West					
	AM Peak Hour	Ridgeway Rd					STH 60					N/A					STH 60					
	Start Time	Right	Thru	Left	U-Tn	Total	Right	Thru	Left	U-Tn	Total	Right	Thru	Left	U-Tn	Total	Right	Thru	Left	U-Tn	Total	Totals
AM Peak Hour	7:00 AM	14	0	28	0	42	2	57	0	0	59	0	0	0	0	0	0	94	2	0	96	197
	7:15 AM	12	0	14	0	26	2	67	0	0	69	0	0	0	0	0	0	117	2	0	119	214
	7:30 AM	17	0	19	0	36	3	108	0	0	111	0	0	0	0	0	0	89	2	0	91	238
	7:45 AM	17	0	7	0	24	8	53	0	0	61	0	0	0	0	0	0	60	2	0	62	147
	Peak Hour Volume	60	0	68	0	128	15	285	0	0	300	0	0	0	0	0	0	360	8	0	368	796
	Rounded Hourly Volume	60	0	70	0	130	15	285	0	0	300	0	0	0	0	0	0	360	10	0	370	800
	% Single Unit Trucks	0.0	0.0	1.5	0.0	0.8	0.0	3.9	0.0	0.0	3.7	0.0	0.0	0.0	0.0	0.0	0.0	1.7	0.0	0.0	1.6	2.3
	% Heavy Trucks	0.0	0.0	0.0	0.0	0.0	0.0	2.5	0.0	0.0	2.3	0.0	0.0	0.0	0.0	0.0	0.0	2.8	0.0	0.0	2.7	2.1
	% Trucks (Total)	0.0	0.0	1.5	0.0	0.8	0.0	6.3	0.0	0.0	6.0	0.0	0.0	0.0	0.0	0.0	0.0	4.4	0.0	0.0	4.3	4.4
	Peak Hour Factor (PHF)	0.88	0.00	0.61	0.00	0.76	0.47	0.66	0.00	0.00	0.68	0.00	0.00	0.00	0.00	0.00	0.00	0.77	1.00	0.00	0.77	0.84

Wednesday, February 12, 2020		From North					From East					From South					From West					
	MD Peak Hour	Ridgeway Rd					STH 60					N/A					STH 60					
	Start Time	Right	Thru	Left	U-Tn	Total	Right	Thru	Left	U-Tn	Total	Right	Thru	Left	U-Tn	Total	Right	Thru	Left	U-Tn	Total	Totals
Midday (MD) Peak Hour	11:00 AM	8	0	2	0	10	7	102	0	0	109	0	0	0	0	0	0	78	4	0	82	201
	11:15 AM	10	0	6	0	16	4	88	0	0	92	0	0	0	0	0	0	83	4	0	87	195
	11:30 AM	11	0	3	0	14	4	86	0	0	90	0	0	0	0	0	0	83	6	0	89	193
	11:45 AM	6	0	7	0	13	6	63	0	0	69	0	0	0	0	0	0	78	6	0	84	166
	Peak Hour Volume	35	0	18	0	53	21	339	0	0	360	0	0	0	0	0	0	322	20	0	342	755
	Rounded Hourly Volume	35	0	20	0	55	20	340	0	0	360	0	0	0	0	0	0	320	20	0	340	755
	% Single Unit Trucks	2.9	0.0	0.0	0.0	1.9	0.0	2.1	0.0	0.0	1.9	0.0	0.0	0.0	0.0	0.0	0.0	1.6	0.0	0.0	1.5	1.7
	% Heavy Trucks	0.0	0.0	0.0	0.0	0.0	0.0	0.6	0.0	0.0	0.6	0.0	0.0	0.0	0.0	0.0	0.0	1.2	0.0	0.0	1.2	0.8
	% Trucks (Total)	2.9	0.0	0.0	0.0	1.9	0.0	2.7	0.0	0.0	2.5	0.0	0.0	0.0	0.0	0.0	0.0	2.8	0.0	0.0	2.6	2.5
	Peak Hour Factor (PHF)	0.80	0.00	0.64	0.00	0.83	0.75	0.83	0.00	0.00	0.83	0.00	0.00	0.00	0.00	0.00	0.00	0.97	0.83	0.00	0.96	0.94

Wednesday, February 12, 2020		From North					From East					From South					From West					
	PM Peak Hour	Ridgeway Rd					STH 60					N/A					STH 60					
	Start Time	Right	Thru	Left	U-Tn	Total	Right	Thru	Left	U-Tn	Total	Right	Thru	Left	U-Tn	Total	Right	Thru	Left	U-Tn	Total	Totals
PM Peak Hour	4:45 PM	3	0	8	0	11	9	74	0	0	83	0	0	0	0	0	0	89	11	0	100	194
	5:00 PM	2	0	3	0	5	14	98	0	0	112	0	0	0	0	0	0	106	13	0	119	236
	5:15 PM	4	0	5	0	9	14	79	0	0	93	0	0	0	0	0	0	89	16	0	105	207
	5:30 PM	5	0	4	0	9	12	70	0	0	82	0	0	0	0	0	0	86	10	0	96	187
	Peak Hour Volume	14	0	20	0	34	49	321	0	0	370	0	0	0	0	0	0	370	50	0	420	824
	Rounded Hourly Volume	15	0	20	0	35	50	320	0	0	370	0	0	0	0	0	0	370	50	0	420	825
	% Single Unit Trucks	0.0	0.0	0.0	0.0	0.0	0.0	3.7	0.0	0.0	3.2	0.0	0.0	0.0	0.0	0.0	0.0	2.7	0.0	0.0	2.4	2.7
	% Heavy Trucks	0.0	0.0	0.0	0.0	0.0	0.0	0.9	0.0	0.0	0.8	0.0	0.0	0.0	0.0	0.0	0.0	0.5	0.0	0.0	0.5	0.6
	% Trucks (Total)	0.0	0.0	0.0	0.0	0.0	0.0	4.7	0.0	0.0	4.1	0.0	0.0	0.0	0.0	0.0	0.0	3.2	0.0	0.0	2.9	3.3
	Peak Hour Factor (PHF)	0.70	0.00	0.62	0.00	0.77	0.87	0.82	0.00	0.00	0.83	0.00	0.00	0.00	0.00	0.00	0.00	0.87	0.78	0.00	0.88	0.87

Peak Hour Pedestrian and Bicyclist Volumes

Pedestrians and Bicyclists		Crossing North Approach			Crossing East Approach			Crossing South Approach			Crossing West Approach			Total Ped & Bike Volume
		Ridgeway Rd			STH 60			N/A			STH 60			
	15-Minute Start Time	Pedestrian	Bicyclist	Total	Pedestrian	Bicyclist	Total	Pedestrian	Bicyclist	Total	Pedestrian	Bicyclist	Total	
AM	7:00 AM	0	0	0	0	0	0	0	0	0	0	0	0	0
	7:15 AM	0	1	1	0	0	0	0	0	0	0	0	0	1
	7:30 AM	0	0	0	0	0	0	0	0	0	0	0	0	0
	7:45 AM	0	0	0	0	0	0	0	0	0	0	0	0	0
	Total	0	1	1	0	0	0	0	0	0	0	0	0	1
MD	11:00 AM	0	0	0	0	0	0	0	0	0	0	0	0	0
	11:15 AM	0	0	0	0	0	0	0	0	0	0	0	0	0
	11:30 AM	1	0	1	0	0	0	0	0	0	0	0	0	1
	11:45 AM	0	0	0	0	0	0	0	0	0	0	0	0	0
	Total	1	0	1	0	0	0	0	0	0	0	0	0	1
PM	4:45 PM	0	0	0	0	0	0	0	0	0	0	0	0	0
	5:00 PM	0	0	0	0	0	0	0	0	0	0	0	0	0
	5:15 PM	1	0	1	0	0	0	0	0	0	0	0	0	1
	5:30 PM	0	0	0	0	0	0	0	0	0	0	0	0	0
	Total	1	0	1	0	0	0	0	0	0	0	0	0	1

Intersection Traffic Volume Report

Count Basics			Page 4 of 11
Start Date:	Wednesday, February 12, 2020	Weekday/Weekend	Schools in Session
Total Number of Hours Counted: 9		Non-Holiday	No Special Events

Hourly Volume Summary - Motor Vehicle Data

All Motor Vehicles

Ridgeway Rd and STH 60

One-Hour Motor Vehicle Data

One-Hour Time Period Start Time		From North (Ridgeway Rd) Right	Thru	Left	U-Tn	Total	From East (STH 60) Right	Thru	Left	U-Tn	Total	From South (N/A) Right	Thru	Left	U-Tn	Total	From West (STH 60) Right	Thru	Left	U-Tn	Total	Total Vehicle Volume	Directional Volume Totals E/W	N/S
AM	6:00 AM	44	0	29	0	73	2	181	0	0	183	0	0	0	0	0	0	275	3	0	278	534	461	73
	7:00 AM	60	0	68	0	128	15	285	0	0	300	0	0	0	0	0	0	360	8	0	368	796	668	128
	8:00 AM	30	0	29	0	59	10	264	0	0	274	0	0	0	0	0	0	263	10	0	273	606	547	59
	9:00 AM	0	0	0	0	0	0	0	0	0	0	0	0	0	0	0	0	0	0	0	0	0	0	0
MD	10:00 AM	0	0	0	0	0	0	0	0	0	0	0	0	0	0	0	0	0	0	0	0	0	0	0
	11:00 AM	35	0	18	0	53	21	339	0	0	360	0	0	0	0	0	0	322	20	0	342	755	702	53
	12:00 PM	20	0	10	0	30	10	314	0	0	324	0	0	0	0	0	0	299	19	0	318	672	642	30
	1:00 PM	21	0	14	0	35	10	301	0	0	311	0	0	0	0	0	0	285	24	0	309	655	620	35
PM	2:00 PM	0	0	0	0	0	0	0	0	0	0	0	0	0	0	0	0	0	0	0	0	0	0	0
	3:00 PM	23	0	28	0	51	34	297	0	0	331	0	0	0	0	0	0	328	29	0	357	739	688	51
	4:00 PM	10	0	23	0	33	24	334	0	0	358	0	0	0	0	0	0	350	38	0	388	779	746	33
	5:00 PM	15	0	18	0	33	46	313	0	0	359	0	0	0	0	0	0	363	49	0	412	804	771	33
	6:00 PM	0	0	0	0	0	0	0	0	0	0	0	0	0	0	0	0	0	0	0	0	0	0	0
	7:00 PM	0	0	0	0	0	0	0	0	0	0	0	0	0	0	0	0	0	0	0	0	0	0	0
	8:00 PM	0	0	0	0	0	0	0	0	0	0	0	0	0	0	0	0	0	0	0	0	0	0	0
	9:00 PM	0	0	0	0	0	0	0	0	0	0	0	0	0	0	0	0	0	0	0	0	0	0	0
Totals		258	0	237	0	495	172	2628	0	0	2800	0	0	0	0	0	0	2845	200	0	3045	6340	5845	495

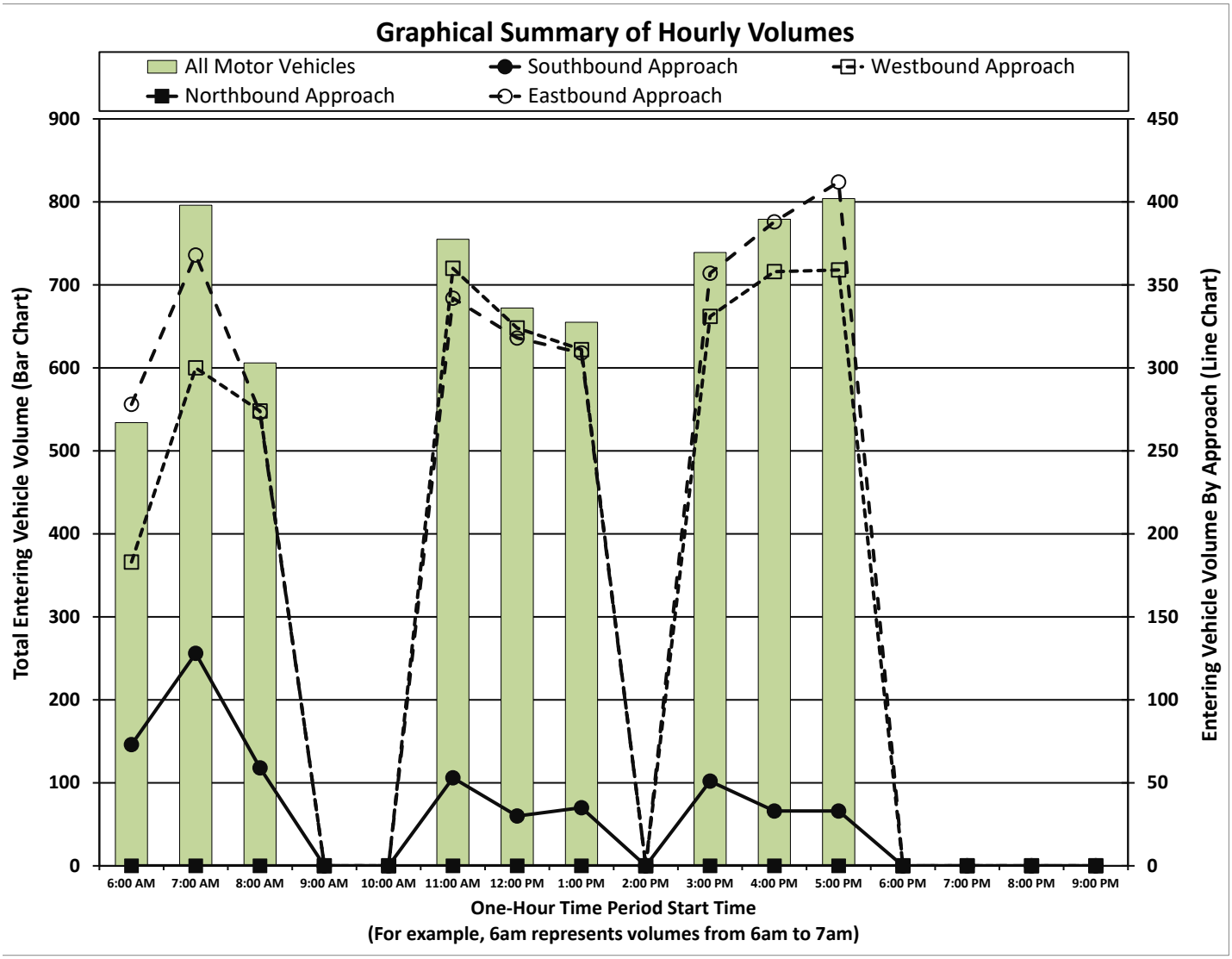

Intersection Traffic Volume Report

Count Basics			*Page 5 of 11*
Start Date:	Wednesday, February 12, 2020	Weekday/Weekend	Schools in Session
Total Number of Hours Counted: 9		Non-Holiday	No Special Events

15-Minute Motor Vehicle Data

All Motor Vehicles

Ridgeway Rd and STH 60

15-Minute Motor Vehicle Data

15-Minute Time Period Start Time		From North (Ridgeway Rd) Right	Thru	Left	U-Tn	Total	From East (STH 60) Right	Thru	Left	U-Tn	Total	From South (N/A) Right	Thru	Left	U-Tn	Total	From West (STH 60) Right	Thru	Left	U-Tn	Total	15-Min Totals	Hourly Sum	PHF
AM Peak Period	6:00 AM	8	0	6	0	14	0	31	0	0	31	0	0	0	0	0	0	54	1	0	55	100	534	0.87
	6:15 AM	13	0	7	0	20	1	46	0	0	47	0	0	0	0	0	0	59	0	0	59	126	631	0.80
	6:30 AM	11	0	8	0	19	0	55	0	0	55	0	0	0	0	0	0	78	2	0	80	154	719	0.84
	6:45 AM	12	0	8	0	20	1	49	0	0	50	0	0	0	0	0	0	84	0	0	84	154	803	0.84
	7:00 AM	14	0	28	0	42	2	57	0	0	59	0	0	0	0	0	0	94	2	0	96	197	796	0.84
	7:15 AM	12	0	14	0	26	2	67	0	0	69	0	0	0	0	0	0	117	2	0	119	214	754	0.79
	7:30 AM	17	0	19	0	36	3	108	0	0	111	0	0	0	0	0	0	89	2	0	91	238	697	0.73
	7:45 AM	17	0	7	0	24	8	53	0	0	61	0	0	0	0	0	0	60	2	0	62	147	619	0.97
	8:00 AM	8	0	9	0	17	1	59	0	0	60	0	0	0	0	0	0	77	1	0	78	155	606	0.95
	8:15 AM	6	0	5	0	11	2	72	0	0	74	0	0	0	0	0	0	67	5	0	72	157		
	8:30 AM	10	0	12	0	22	3	63	0	0	66	0	0	0	0	0	0	69	3	0	72	160		
	8:45 AM	6	0	3	0	9	4	70	0	0	74	0	0	0	0	0	0	50	1	0	51	134		
	9:00 AM	0	0	0	0	0	0	0	0	0	0	0	0	0	0	0	0	0	0	0	0	0		
	9:15 AM	0	0	0	0	0	0	0	0	0	0	0	0	0	0	0	0	0	0	0	0	0		
	9:30 AM	0	0	0	0	0	0	0	0	0	0	0	0	0	0	0	0	0	0	0	0	0		
	9:45 AM	0	0	0	0	0	0	0	0	0	0	0	0	0	0	0	0	0	0	0	0	0		
Midday Peak Period	10:00 AM	0	0	0	0	0	0	0	0	0	0	0	0	0	0	0	0	0	0	0	0	0		
	10:15 AM	0	0	0	0	0	0	0	0	0	0	0	0	0	0	0	0	0	0	0	0	0		
	10:30 AM	0	0	0	0	0	0	0	0	0	0	0	0	0	0	0	0	0	0	0	0	0		
	10:45 AM	0	0	0	0	0	0	0	0	0	0	0	0	0	0	0	0	0	0	0	0	0		
	11:00 AM	8	0	2	0	10	7	102	0	0	109	0	0	0	0	0	0	78	4	0	82	201	755	0.94
	11:15 AM	10	0	6	0	16	4	88	0	0	92	0	0	0	0	0	0	83	4	0	87	195	737	0.94
	11:30 AM	11	0	3	0	14	4	86	0	0	90	0	0	0	0	0	0	83	6	0	89	193	722	0.94
	11:45 AM	6	0	7	0	13	6	63	0	0	69	0	0	0	0	0	0	78	6	0	84	166	688	0.94
	12:00 PM	6	0	3	0	9	4	78	0	0	82	0	0	0	0	0	0	85	7	0	92	183	672	0.92
	12:15 PM	5	0	3	0	8	3	88	0	0	91	0	0	0	0	0	0	80	1	0	81	180	627	0.87
	12:30 PM	5	0	2	0	7	2	68	0	0	70	0	0	0	0	0	0	75	7	0	82	159	599	0.94
	12:45 PM	4	0	2	0	6	1	80	0	0	81	0	0	0	0	0	0	59	4	0	63	150	631	0.83
	1:00 PM	5	0	1	0	6	2	59	0	0	61	0	0	0	0	0	0	66	5	0	71	138	655	0.86
	1:15 PM	3	0	4	0	7	2	76	0	0	78	0	0	0	0	0	0	63	4	0	67	152		
	1:30 PM	5	0	5	0	10	0	88	0	0	88	0	0	0	0	0	0	84	9	0	93	191		
	1:45 PM	8	0	4	0	12	6	78	0	0	84	0	0	0	0	0	0	72	6	0	78	174		
PM Peak Period	2:00 PM	0	0	0	0	0	0	0	0	0	0	0	0	0	0	0	0	0	0	0	0	0		
	2:15 PM	0	0	0	0	0	0	0	0	0	0	0	0	0	0	0	0	0	0	0	0	0		
	2:30 PM	0	0	0	0	0	0	0	0	0	0	0	0	0	0	0	0	0	0	0	0	0		
	2:45 PM	0	0	0	0	0	0	0	0	0	0	0	0	0	0	0	0	0	0	0	0	0		
	3:00 PM	6	0	6	0	12	11	72	0	0	83	0	0	0	0	0	0	71	8	0	79	174	739	0.91
	3:15 PM	1	0	9	0	10	9	69	0	0	78	0	0	0	0	0	0	84	6	0	90	178	760	0.94
	3:30 PM	12	0	8	0	20	6	83	0	0	89	0	0	0	0	0	0	86	8	0	94	203	774	0.95
	3:45 PM	4	0	5	0	9	8	73	0	0	81	0	0	0	0	0	0	87	7	0	94	184	769	0.97
	4:00 PM	3	0	2	0	5	3	86	0	0	89	0	0	0	0	0	0	93	8	0	101	195	779	0.98
	4:15 PM	3	0	8	0	11	4	87	0	0	91	0	0	0	0	0	0	81	9	0	90	192	820	0.87
	4:30 PM	1	0	5	0	6	8	87	0	0	95	0	0	0	0	0	0	87	10	0	97	198	835	0.88
	4:45 PM	3	0	8	0	11	9	74	0	0	83	0	0	0	0	0	0	89	11	0	100	194	824	0.87
	5:00 PM	2	0	3	0	5	14	98	0	0	112	0	0	0	0	0	0	106	13	0	119	236	804	0.85
	5:15 PM	4	0	5	0	9	14	79	0	0	93	0	0	0	0	0	0	89	16	0	105	207		
	5:30 PM	5	0	4	0	9	12	70	0	0	82	0	0	0	0	0	0	86	10	0	96	187		
	5:45 PM	4	0	6	0	10	6	66	0	0	72	0	0	0	0	0	0	82	10	0	92	174		
	6:00 PM	0	0	0	0	0	0	0	0	0	0	0	0	0	0	0	0	0	0	0	0	0		
	6:15 PM	0	0	0	0	0	0	0	0	0	0	0	0	0	0	0	0	0	0	0	0	0		
	6:30 PM	0	0	0	0	0	0	0	0	0	0	0	0	0	0	0	0	0	0	0	0	0		
	6:45 PM	0	0	0	0	0	0	0	0	0	0	0	0	0	0	0	0	0	0	0	0	0		
	7:00 PM	0	0	0	0	0	0	0	0	0	0	0	0	0	0	0	0	0	0	0	0	0		
	7:15 PM	0	0	0	0	0	0	0	0	0	0	0	0	0	0	0	0	0	0	0	0	0		
	7:30 PM	0	0	0	0	0	0	0	0	0	0	0	0	0	0	0	0	0	0	0	0	0		
	7:45 PM	0	0	0	0	0	0	0	0	0	0	0	0	0	0	0	0	0	0	0	0	0		
	8:00 PM	0	0	0	0	0	0	0	0	0	0	0	0	0	0	0	0	0	0	0	0	0		
	8:15 PM	0	0	0	0	0	0	0	0	0	0	0	0	0	0	0	0	0	0	0	0	0		
	8:30 PM	0	0	0	0	0	0	0	0	0	0	0	0	0	0	0	0	0	0	0	0	0		
	8:45 PM	0	0	0	0	0	0	0	0	0	0	0	0	0	0	0	0	0	0	0	0	0		
	9:00 PM	0	0	0	0	0	0	0	0	0	0	0	0	0	0	0	0	0	0	0	0	0		
	9:15 PM	0	0	0	0	0	0	0	0	0	0	0	0	0	0	0	0	0	0	0	0	0		
	9:30 PM	0	0	0	0	0	0	0	0	0	0	0	0	0	0	0	0	0	0	0	0	0		
	9:45 PM	0	0	0	0	0	0	0	0	0	0	0	0	0	0	0	0	0	0	0	0	0		
Totals		258	0	237	0	495	172	2628	0	0	2800	0	0	0	0	0	0	2845	200	0	3045	6340		

Peak Hour All Vehicle Volume Summary

Hourly Time Period Start Time		From North (Ridgeway Rd) Right	Thru	Left	U-Tn	Total	From East (STH 60) Right	Thru	Left	U-Tn	Total	From South (N/A) Right	Thru	Left	U-Tn	Total	From West (STH 60) Right	Thru	Left	U-Tn	Total	Total Hourly Volume	PHF
AM	7:00 AM	60	0	68	0	128	15	285	0	0	300	0	0	0	0	0	0	360	8	0	368	796	0.84
MD	11:00 AM	35	0	18	0	53	21	339	0	0	360	0	0	0	0	0	0	322	20	0	342	755	0.94
PM	4:45 PM	14	0	20	0	34	49	321	0	0	370	0	0	0	0	0	0	370	50	0	420	824	0.87

Intersection Traffic Volume Report

Count Basics	Version 2013.J4.1		Page 1 of 11
Start Date:	Wednesday, February 12, 2020	Weekday/Weekend	Schools Not in Session
Total Number of Hours Counted: 9		Non-Holiday	No Special Events

Base Information, Observed (9) Hour and Estimated (24) Hour Volume Summaries

Intersection of: Eagle Dr and STH 60

Site Information

Municipality	Village of Jackson		
County	Douglas	WisDOT Region	SE
Traffic Control	Partial Stop Control		
Roadway Names		North Direction	↑
North Leg	Eagle Dr		
East Leg	STH 60		
South Leg	Eagle Dr		
West Leg	STH 60		
Special Considerations			
Schools	Not in Session		
Holidays	None		
Special Events	None		
Special Pedestrians Observed			
Pre-school children	None		
Elementry school age children	None		
Visually impaired (white cane/helper dog)	None		
Elderly/disabled (except wheelchairs)	None		
Wheelchairs/electric scooters	None		
Other (describe)	None	None	

Count Information

Hrs Counted:	6:00 AM-9:00 AM, 11:00 AM-2:00 PM, and 3:00 PM-6:00 PM				
1st Day of Count	Wednesday, February 12, 2020			Weather	
AM Peak Period	Wednesday, February 12, 2020			Cloudy & Dry	
Midday Peak Period	Saturday, February 22, 2020			Cloudy & Dry	
PM Peak Period	Wednesday, February 12, 2020			Cloudy & Dry	
Calculated Peak Hours					
AM	6:45-7:45am	MD	11:00-12:00am	PM	4:15-5:15pm
Peak Hours Selected for Analysis					
AM	7:00-8:00am	MD	11:00-12:00am	PM	4:45-5:45pm
Daily/Seasonal Adjustment Group					
Count Expansion Group					
Daily/Seasonal Adjustment Factor	1		Count Expansion Factor	#N/A	
Company Name	SRF Consulting, Inc.			Manual Adj.	1.000
Observers	AM Peak Period	Matt Flanagan/Gabby Hellman			
	Midday Peak Period	Matt Flanagan/Gabby Hellman			
	PM Peak Period	Matt Flanagan/Gabby Hellman			
Comments					

Observed 9 Hour Volume Summary

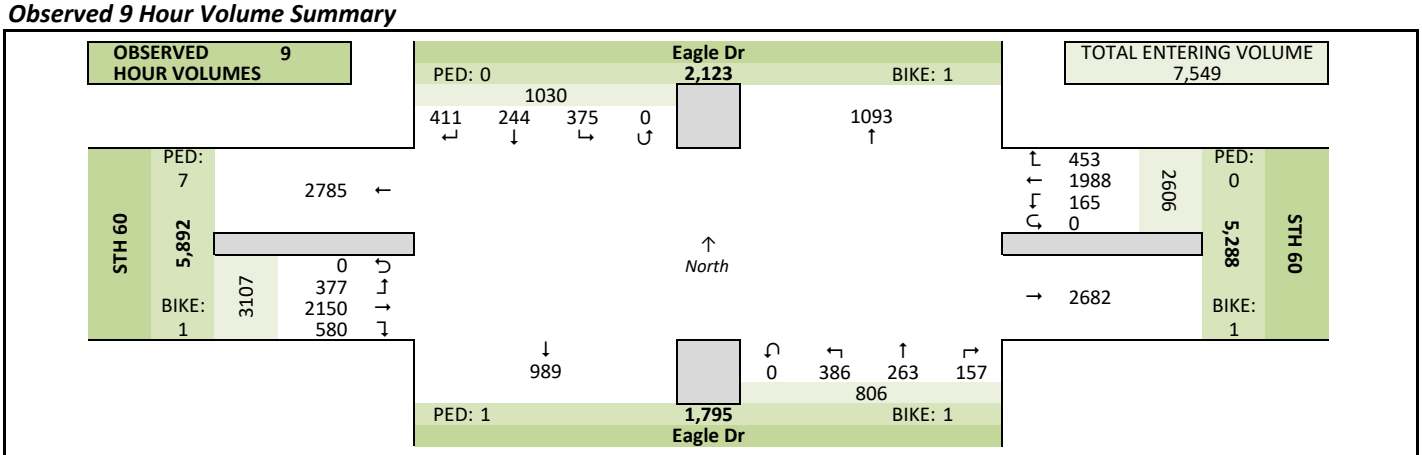

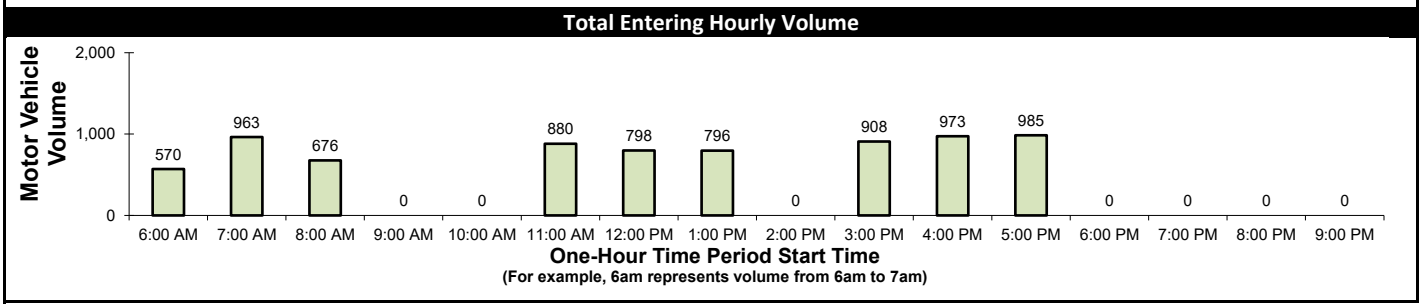

Estimated 24 Hour AADT

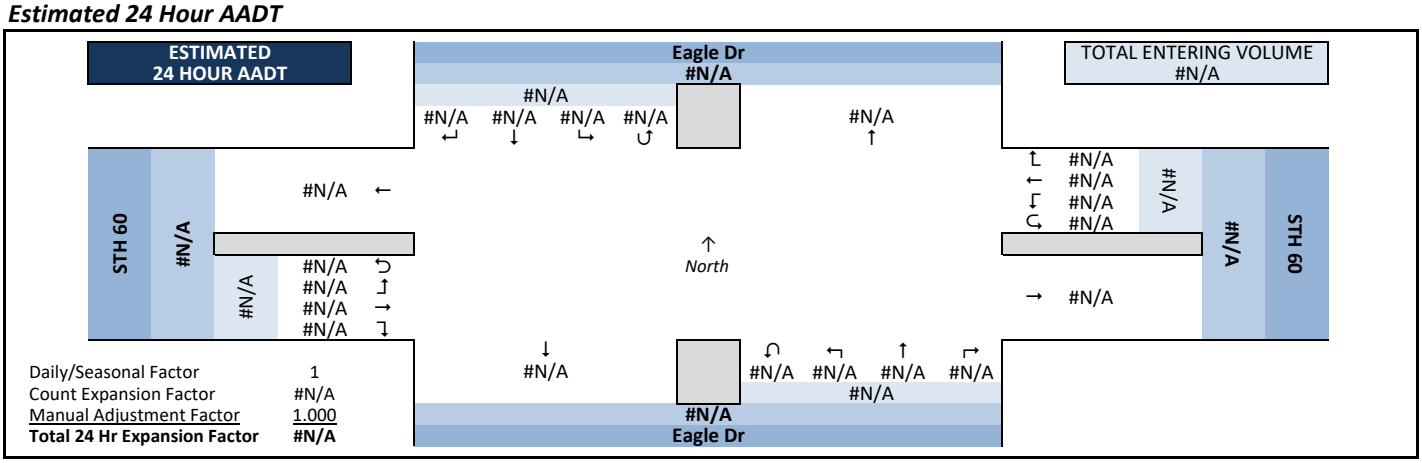

Intersection Traffic Volume Report

Count Basics			Page 2 of 11
Start Date:	Wednesday, February 12, 2020	Weekday/Weekend	Schools Not in Session
Total Number of Hours Counted: 9		Non-Holiday	No Special Events

Peak Hour Volume Graphical Summary

All Motor Vehicles

Eagle Dr and STH 60

AM Peak Hour Summary

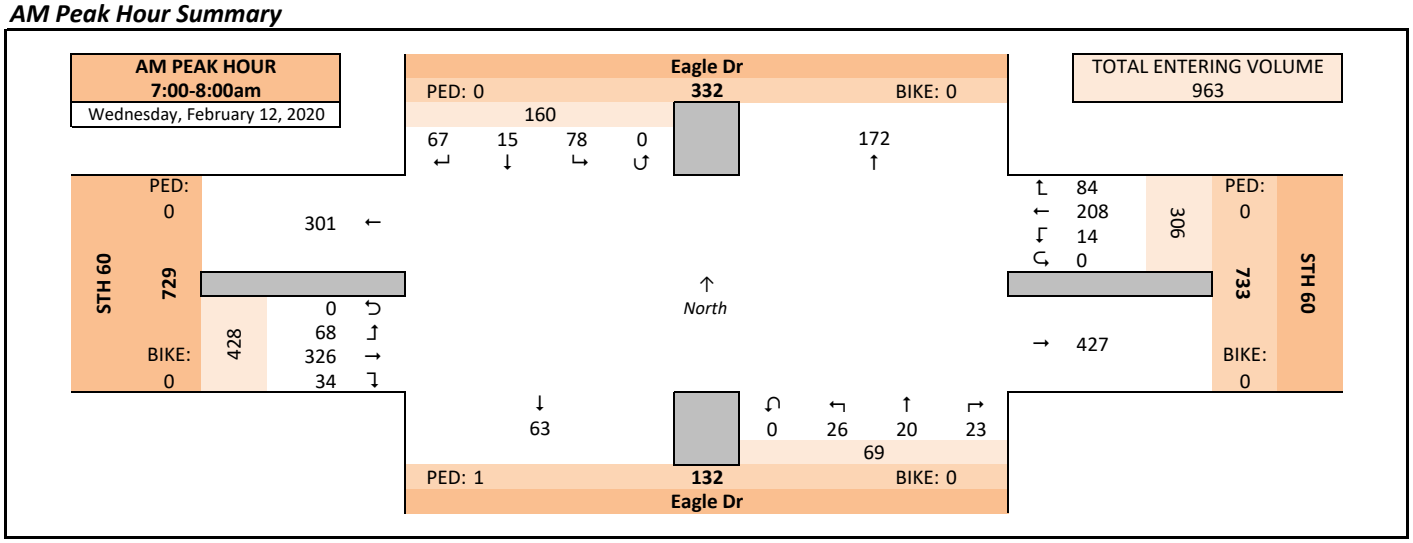

Midday (MD) Peak Hour Summary

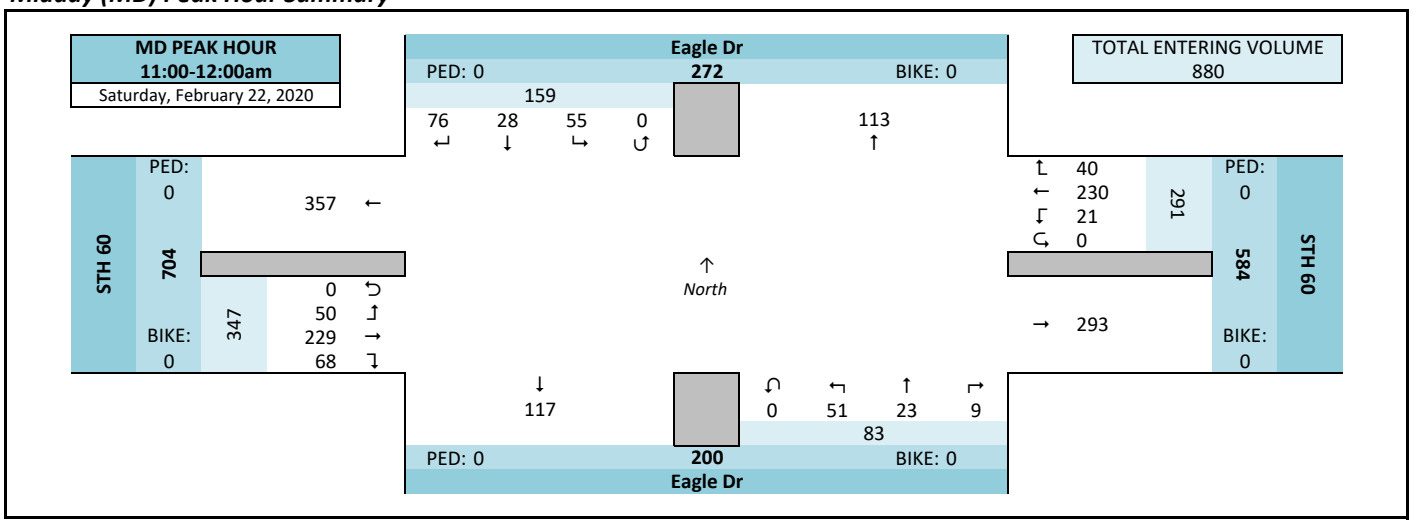

PM Peak Hour Summary

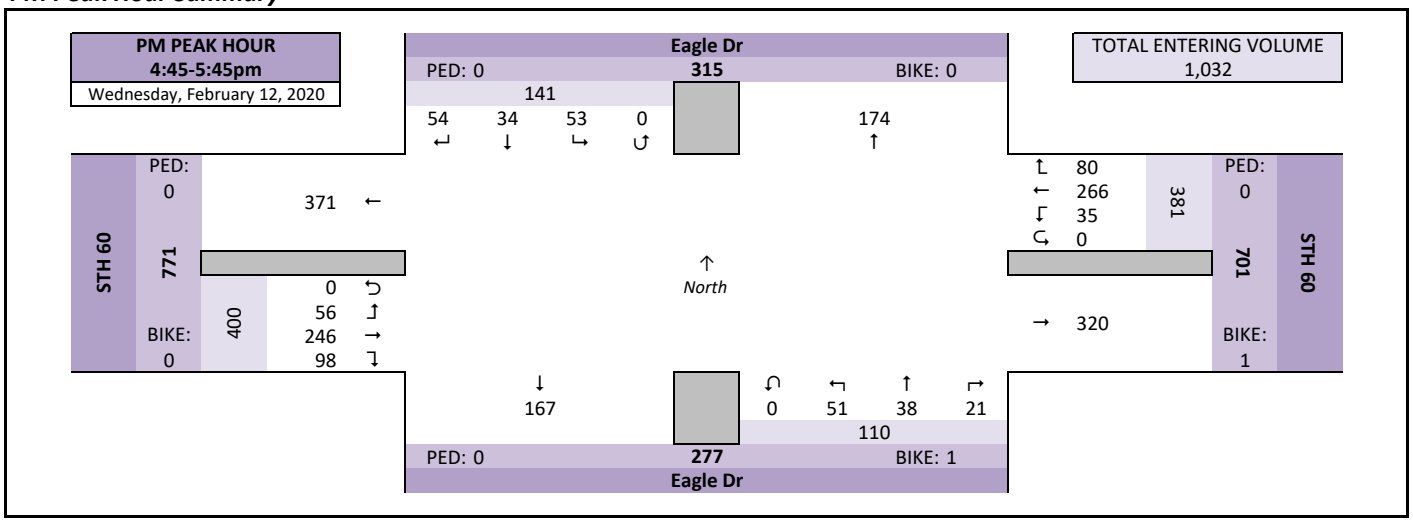

Intersection Traffic Volume Report

Count Basics			Page 3 of 11
Start Date:	Wednesday, February 12, 2020	Weekday/Weekend	Schools Not in Session
Total Number of Hours Counted: 9		Non-Holiday	No Special Events

Peak Hour Volume Summary

All Motor Vehicles

Eagle Dr and STH 60

Peak Hour Volumes, Truck Percentages, and PHFs

Wednesday, February 12, 2020		From North					From East					From South					From West					
	AM Peak Hour	Eagle Dr					STH 60					Eagle Dr					STH 60					
	Start Time	Right	Thru	Left	U-Tn	Total	Right	Thru	Left	U-Tn	Total	Right	Thru	Left	U-Tn	Total	Right	Thru	Left	U-Tn	Total	Totals
AM Peak Hour	7:00 AM	9	4	11	0	24	17	46	3	0	66	4	6	6	0	16	6	95	17	0	118	224
	7:15 AM	19	2	25	0	46	39	48	4	0	91	6	4	6	0	16	9	95	29	0	133	286
	7:30 AM	29	5	22	0	56	20	70	3	0	93	11	5	7	0	23	12	81	18	0	111	283
	7:45 AM	10	4	20	0	34	8	44	4	0	56	2	5	7	0	14	7	55	4	0	66	170
	Peak Hour Volume	67	15	78	0	160	84	208	14	0	306	23	20	26	0	69	34	326	68	0	428	963
	Rounded Hourly Volume	65	15	80	0	160	85	210	15	0	310	25	20	25	0	70	35	325	70	0	430	970
	% Single Unit Trucks	3.0	0.0	6.4	0.0	4.4	1.2	3.4	0.0	0.0	2.6	4.3	5.0	7.7	0.0	5.8	5.9	3.1	4.4	0.0	3.5	3.5
	% Heavy Trucks	3.0	0.0	1.3	0.0	1.9	0.0	1.9	7.1	0.0	1.6	0.0	0.0	3.8	0.0	1.4	2.9	2.8	0.0	0.0	2.3	2.0
	% Trucks (Total)	6.0	0.0	7.7	0.0	6.2	1.2	5.3	7.1	0.0	4.2	4.3	5.0	11.5	0.0	7.2	8.8	5.8	4.4	0.0	5.8	5.5
	Peak Hour Factor (PHF)	0.58	0.75	0.78	0.00	0.71	0.54	0.74	0.87	0.00	0.82	0.52	0.83	0.93	0.00	0.75	0.71	0.86	0.59	0.00	0.80	0.84

Saturday, February 22, 2020		From North					From East					From South					From West					
	MD Peak Hour	Eagle Dr					STH 60					Eagle Dr					STH 60					
	Start Time	Right	Thru	Left	U-Tn	Total	Right	Thru	Left	U-Tn	Total	Right	Thru	Left	U-Tn	Total	Right	Thru	Left	U-Tn	Total	Totals
Midday (MD) Peak Hour	11:00 AM	38	7	28	0	73	8	53	5	0	66	2	5	11	0	18	11	61	9	0	81	238
	11:15 AM	13	8	9	0	30	9	70	6	0	85	3	7	14	0	24	17	59	19	0	95	234
	11:30 AM	13	6	8	0	27	17	62	6	0	85	2	5	13	0	20	20	49	11	0	80	212
	11:45 AM	12	7	10	0	29	6	45	4	0	55	2	6	13	0	21	20	60	11	0	91	196
	Peak Hour Volume	76	28	55	0	159	40	230	21	0	291	9	23	51	0	83	68	229	50	0	347	880
	Rounded Hourly Volume	75	30	55	0	160	40	230	20	0	290	10	25	50	0	85	70	230	50	0	350	885
	% Single Unit Trucks	0.0	0.0	0.0	0.0	0.0	2.5	2.6	0.0	0.0	2.4	0.0	0.0	2.0	0.0	1.2	0.0	1.3	0.0	0.0	0.9	1.2
	% Heavy Trucks	0.0	0.0	0.0	0.0	0.0	0.0	0.4	0.0	0.0	0.3	0.0	0.0	2.0	0.0	1.2	0.0	1.7	2.0	0.0	1.4	0.8
	% Trucks (Total)	0.0	0.0	0.0	0.0	0.0	2.5	3.0	0.0	0.0	2.7	0.0	0.0	3.9	0.0	2.4	0.0	3.1	2.0	0.0	2.3	2.0
	Peak Hour Factor (PHF)	0.50	0.87	0.49	0.00	0.54	0.59	0.82	0.87	0.00	0.86	0.75	0.82	0.91	0.00	0.86	0.85	0.94	0.66	0.00	0.91	0.92

Wednesday, February 12, 2020		From North					From East					From South					From West					
	PM Peak Hour	Eagle Dr					STH 60					Eagle Dr					STH 60					
	Start Time	Right	Thru	Left	U-Tn	Total	Right	Thru	Left	U-Tn	Total	Right	Thru	Left	U-Tn	Total	Right	Thru	Left	U-Tn	Total	Totals
PM Peak Hour	4:45 PM	12	8	14	0	34	21	63	5	0	89	4	10	8	0	22	25	59	12	0	96	241
	5:00 PM	22	8	23	0	53	26	80	7	0	113	4	10	16	0	30	27	71	20	0	118	314
	5:15 PM	11	10	7	0	28	14	58	11	0	83	5	9	19	0	33	24	54	14	0	92	236
	5:30 PM	9	8	9	0	26	19	65	12	0	96	8	9	8	0	25	22	62	10	0	94	241
	Peak Hour Volume	54	34	53	0	141	80	266	35	0	381	21	38	51	0	110	98	246	56	0	400	1032
	Rounded Hourly Volume	55	35	55	0	145	80	265	35	0	380	20	40	50	0	110	100	245	55	0	400	1035
	% Single Unit Trucks	0.0	0.0	0.0	0.0	0.0	1.2	1.5	0.0	0.0	1.3	0.0	0.0	0.0	0.0	0.0	0.0	0.4	0.0	0.0	0.2	0.6
	% Heavy Trucks	0.0	0.0	1.9	0.0	0.7	1.2	1.1	0.0	0.0	1.0	0.0	0.0	0.0	0.0	0.0	0.0	1.6	3.6	0.0	1.5	1.1
	% Trucks (Total)	0.0	0.0	1.9	0.0	0.7	2.5	2.6	0.0	0.0	2.4	0.0	0.0	0.0	0.0	0.0	0.0	2.0	3.6	0.0	1.7	1.6
	Peak Hour Factor (PHF)	0.61	0.85	0.58	0.00	0.67	0.77	0.83	0.73	0.00	0.84	0.66	0.95	0.67	0.00	0.83	0.91	0.87	0.70	0.00	0.85	0.82

Peak Hour Pedestrian and Bicyclist Volumes

Pedestrians and Bicyclists		Crossing North Approach			Crossing East Approach			Crossing South Approach			Crossing West Approach			Total Ped & Bike Volume
		Eagle Dr			STH 60			Eagle Dr			STH 60			
	15-Minute Start Time	Pedestrian	Bicyclist	Total	Pedestrian	Bicyclist	Total	Pedestrian	Bicyclist	Total	Pedestrian	Bicyclist	Total	
AM	7:00 AM	0	0	0	0	0	0	0	0	0	0	0	0	0
	7:15 AM	0	0	0	0	0	0	1	0	1	0	0	0	1
	7:30 AM	0	0	0	0	0	0	0	0	0	0	0	0	0
	7:45 AM	0	0	0	0	0	0	0	0	0	0	0	0	0
	Total	0	0	0	0	0	0	1	0	1	0	0	0	1
MD	11:00 AM	0	0	0	0	0	0	0	0	0	0	0	0	0
	11:15 AM	0	0	0	0	0	0	0	0	0	0	0	0	0
	11:30 AM	0	0	0	0	0	0	0	0	0	0	0	0	0
	11:45 AM	0	0	0	0	0	0	0	0	0	0	0	0	0
	Total	0	0	0	0	0	0	0	0	0	0	0	0	0
PM	4:45 PM	0	0	0	0	0	0	0	0	0	0	0	0	0
	5:00 PM	0	0	0	0	0	0	0	0	0	0	0	0	0
	5:15 PM	0	0	0	0	1	1	0	1	1	0	0	0	2
	5:30 PM	0	0	0	0	0	0	0	0	0	0	0	0	0
	Total	0	0	0	0	1	1	0	1	1	0	0	0	2

Intersection Traffic Volume Report

Count Basics			*Page 4 of 11*
Start Date:	Wednesday, February 12, 2020	Weekday/Weekend	Schools Not in Session
Total Number of Hours Counted: 9		Non-Holiday	No Special Events

Hourly Volume Summary - Motor Vehicle Data

All Motor Vehicles

Eagle Dr and STH 60

One-Hour Motor Vehicle Data

One-Hour Time Period Start Time		From North (Eagle Dr)					From East (STH 60)					From South (Eagle Dr)					From West (STH 60)					Total Vehicle Volume	Directional Volume Totals	
		Right	Thru	Left	U-Tn	Total	Right	Thru	Left	U-Tn	Total	Right	Thru	Left	U-Tn	Total	Right	Thru	Left	U-Tn	Total		E/W	N/S
AM	6:00 AM	24	13	35	0	72	23	138	7	0	168	9	16	17	0	42	27	230	31	0	288	570	456	114
AM	7:00 AM	67	15	78	0	160	84	208	14	0	306	23	20	26	0	69	34	326	68	0	428	963	734	229
AM	8:00 AM	32	15	27	0	74	35	204	7	0	246	16	21	27	0	64	46	222	24	0	292	676	538	138
AM	9:00 AM	0	0	0	0	0	0	0	0	0	0	0	0	0	0	0	0	0	0	0	0	0	0	0
MD	10:00 AM	0	0	0	0	0	0	0	0	0	0	0	0	0	0	0	0	0	0	0	0	0	0	0
MD	11:00 AM	76	28	55	0	159	40	230	21	0	291	9	23	51	0	83	68	229	50	0	347	880	638	242
MD	12:00 PM	37	30	27	0	94	31	231	16	0	278	18	38	54	0	110	68	215	33	0	316	798	594	204
MD	1:00 PM	32	38	31	0	101	39	228	18	0	285	18	30	55	0	103	66	204	37	0	307	796	592	204
PM	2:00 PM	0	0	0	0	0	0	0	0	0	0	0	0	0	0	0	0	0	0	0	0	0	0	0
PM	3:00 PM	49	32	39	0	120	60	226	26	0	312	28	38	51	0	117	100	225	34	0	359	908	671	237
PM	4:00 PM	42	39	42	0	123	70	267	23	0	360	14	41	52	0	107	76	257	50	0	383	973	743	230
PM	5:00 PM	52	34	41	0	127	71	256	33	0	360	22	36	53	0	111	95	242	50	0	387	985	747	238
PM	6:00 PM	0	0	0	0	0	0	0	0	0	0	0	0	0	0	0	0	0	0	0	0	0	0	0
PM	7:00 PM	0	0	0	0	0	0	0	0	0	0	0	0	0	0	0	0	0	0	0	0	0	0	0
PM	8:00 PM	0	0	0	0	0	0	0	0	0	0	0	0	0	0	0	0	0	0	0	0	0	0	0
PM	9:00 PM	0	0	0	0	0	0	0	0	0	0	0	0	0	0	0	0	0	0	0	0	0	0	0
Totals		411	244	375	0	1030	453	1988	165	0	2606	157	263	386	0	806	580	2150	377	0	3107	7549	5713	1836

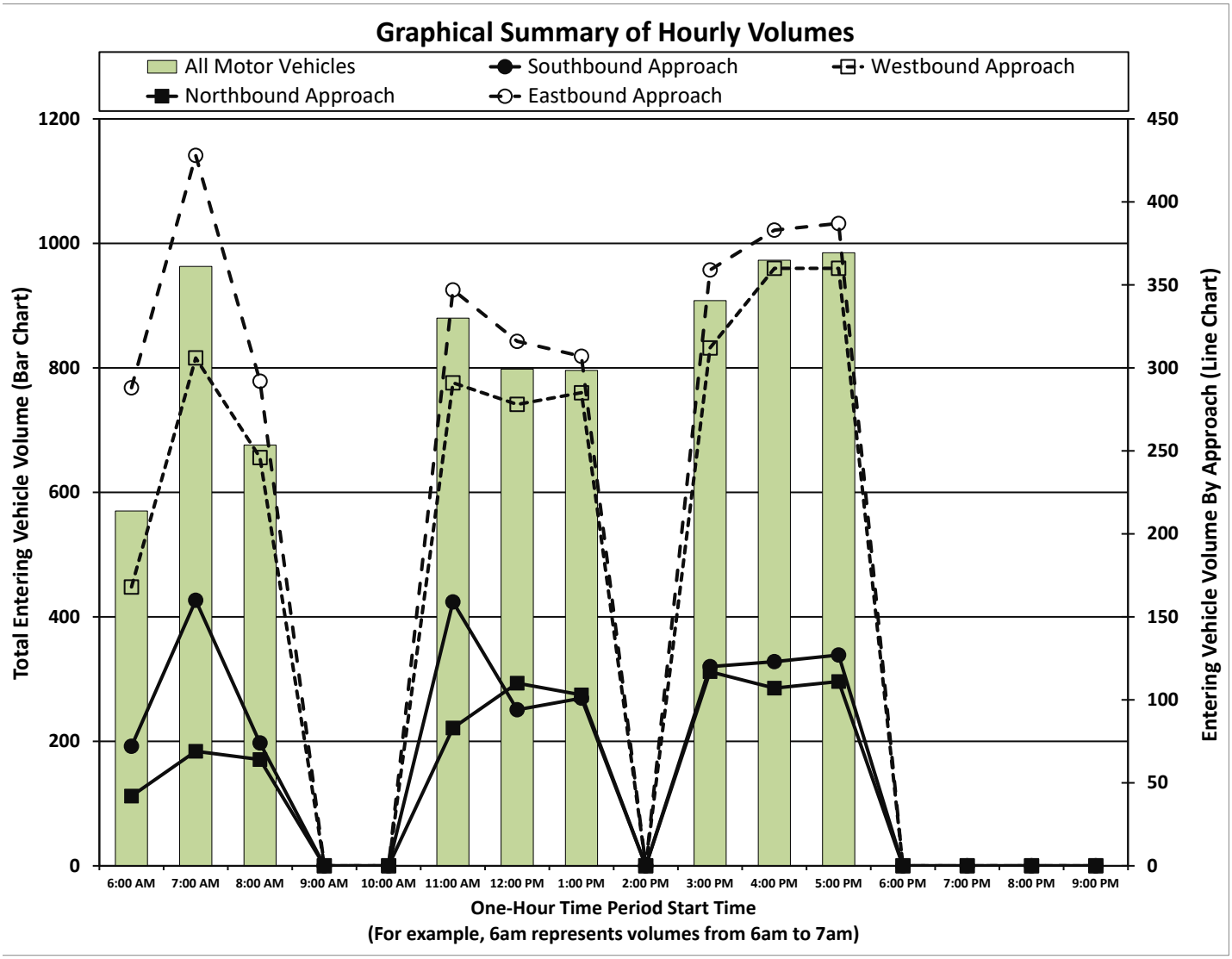

Intersection Traffic Volume Report

Count Basics			*Page 5 of 11*
Start Date:	Wednesday, February 12, 2020	Weekday/Weekend	Schools Not in Session
Total Number of Hours Counted: 9		Non-Holiday	No Special Events

15-Minute Motor Vehicle Data

All Motor Vehicles

Eagle Dr and STH 60

15-Minute Motor Vehicle Data

15-Minute Time Period Start Time		From North (Eagle Dr) Right	Thru	Left	U-Tn	Total	From East (STH 60) Right	Thru	Left	U-Tn	Total	From South (Eagle Dr) Right	Thru	Left	U-Tn	Total	From West (STH 60) Right	Thru	Left	U-Tn	Total	15-Min Totals	Hourly Sum	PHF
AM Peak Period	6:00 AM	4	2	9	0	15	3	22	2	0	27	1	1	2	0	4	4	48	2	0	54	100	570	0.82
	6:15 AM	5	4	5	0	14	7	37	1	0	45	0	5	5	0	10	8	45	9	0	62	131	694	0.77
	6:30 AM	11	3	9	0	23	5	41	3	0	49	4	3	3	0	10	7	68	9	0	84	166	849	0.74
	6:45 AM	4	4	12	0	20	8	38	1	0	47	4	7	7	0	18	8	69	11	0	88	173	966	0.84
	7:00 AM	9	4	11	0	24	17	46	3	0	66	4	6	6	0	16	6	95	17	0	118	224	963	0.84
	7:15 AM	19	2	25	0	46	39	48	4	0	91	6	4	6	0	16	9	95	29	0	133	286	911	0.80
	7:30 AM	29	5	22	0	56	20	70	3	0	93	11	5	7	0	23	12	81	18	0	111	283	782	0.69
	7:45 AM	10	4	20	0	34	8	44	4	0	56	2	5	7	0	14	7	55	4	0	66	170	682	0.93
	8:00 AM	7	2	7	0	16	14	48	1	0	63	4	2	4	0	10	7	69	7	0	83	172	676	0.92
	8:15 AM	7	2	7	0	16	1	51	2	0	54	4	5	5	0	14	12	58	3	0	73	157		
	8:30 AM	6	2	5	0	13	11	56	3	0	70	5	10	7	0	22	15	56	7	0	78	183		
	8:45 AM	12	9	8	0	29	9	49	1	0	59	3	4	11	0	18	12	39	7	0	58	164		
	9:00 AM	0	0	0	0	0	0	0	0	0	0	0	0	0	0	0	0	0	0	0	0	0		
	9:15 AM	0	0	0	0	0	0	0	0	0	0	0	0	0	0	0	0	0	0	0	0	0		
	9:30 AM	0	0	0	0	0	0	0	0	0	0	0	0	0	0	0	0	0	0	0	0	0		
	9:45 AM	0	0	0	0	0	0	0	0	0	0	0	0	0	0	0	0	0	0	0	0	0		
Midday Peak Period	10:00 AM	0	0	0	0	0	0	0	0	0	0	0	0	0	0	0	0	0	0	0	0	0		
	10:15 AM	0	0	0	0	0	0	0	0	0	0	0	0	0	0	0	0	0	0	0	0	0		
	10:30 AM	0	0	0	0	0	0	0	0	0	0	0	0	0	0	0	0	0	0	0	0	0		
	10:45 AM	0	0	0	0	0	0	0	0	0	0	0	0	0	0	0	0	0	0	0	0	0		
	11:00 AM	38	7	28	0	73	8	53	5	0	66	2	5	11	0	18	11	61	9	0	81	238	880	0.92
	11:15 AM	13	8	9	0	30	9	70	6	0	85	3	7	14	0	24	17	59	19	0	95	234	867	0.93
	11:30 AM	13	6	8	0	27	17	62	6	0	85	2	5	13	0	20	20	49	11	0	80	212	835	0.93
	11:45 AM	12	7	10	0	29	6	45	4	0	55	2	6	13	0	21	20	60	11	0	91	196	822	0.91
	12:00 PM	10	8	10	0	28	12	62	8	0	82	4	8	11	0	23	17	67	8	0	92	225	798	0.89
	12:15 PM	8	7	3	0	18	8	62	1	0	71	5	8	19	0	32	21	52	8	0	81	202	748	0.93
	12:30 PM	6	11	7	0	24	4	51	4	0	59	4	10	15	0	29	19	56	12	0	87	199	733	0.92
	12:45 PM	13	4	7	0	24	7	56	3	0	66	5	12	9	0	26	11	40	5	0	56	172	761	0.84
	1:00 PM	8	11	7	0	26	7	45	6	0	58	2	8	10	0	20	17	46	8	0	71	175	796	0.88
	1:15 PM	10	10	7	0	27	12	54	2	0	68	4	8	13	0	25	12	46	9	0	67	187		
	1:30 PM	7	8	12	0	27	11	71	8	0	90	6	7	11	0	24	15	63	8	0	86	227		
	1:45 PM	7	9	5	0	21	9	58	2	0	69	6	7	21	0	34	22	49	12	0	83	207		
PM Peak Period	2:00 PM	0	0	0	0	0	0	0	0	0	0	0	0	0	0	0	0	0	0	0	0	0		
	2:15 PM	0	0	0	0	0	0	0	0	0	0	0	0	0	0	0	0	0	0	0	0	0		
	2:30 PM	0	0	0	0	0	0	0	0	0	0	0	0	0	0	0	0	0	0	0	0	0		
	2:45 PM	0	0	0	0	0	0	0	0	0	0	0	0	0	0	0	0	0	0	0	0	0		
	3:00 PM	9	6	7	0	22	13	53	8	0	74	7	6	18	0	31	19	52	7	0	78	205	908	0.93
	3:15 PM	11	7	11	0	29	19	55	6	0	80	6	10	13	0	29	27	53	11	0	91	229	935	0.96
	3:30 PM	15	8	14	0	37	16	64	8	0	88	7	9	8	0	24	23	63	8	0	94	243	956	0.96
	3:45 PM	14	11	7	0	32	12	54	4	0	70	8	13	12	0	33	31	57	8	0	96	231	963	0.96
	4:00 PM	7	10	5	0	22	13	61	5	0	79	5	12	19	0	36	19	66	10	0	95	232	973	0.97
	4:15 PM	12	12	12	0	36	17	71	7	0	95	2	8	12	0	22	17	65	15	0	97	250	1055	0.84
	4:30 PM	11	9	11	0	31	19	72	6	0	97	3	11	13	0	27	15	67	13	0	95	250	1041	0.83
	4:45 PM	12	8	14	0	34	21	63	5	0	89	4	10	8	0	22	25	59	12	0	96	241	1032	0.82
	5:00 PM	22	8	23	0	53	26	80	7	0	113	4	10	16	0	30	27	71	20	0	118	314	985	0.78
	5:15 PM	11	10	7	0	28	14	58	11	0	83	5	9	19	0	33	24	54	14	0	92	236		
	5:30 PM	9	8	9	0	26	19	65	12	0	96	8	9	8	0	25	22	62	10	0	94	241		
	5:45 PM	10	8	2	0	20	12	53	3	0	68	5	8	10	0	23	22	55	6	0	83	194		
	6:00 PM	0	0	0	0	0	0	0	0	0	0	0	0	0	0	0	0	0	0	0	0	0		
	6:15 PM	0	0	0	0	0	0	0	0	0	0	0	0	0	0	0	0	0	0	0	0	0		
	6:30 PM	0	0	0	0	0	0	0	0	0	0	0	0	0	0	0	0	0	0	0	0	0		
	6:45 PM	0	0	0	0	0	0	0	0	0	0	0	0	0	0	0	0	0	0	0	0	0		
	7:00 PM	0	0	0	0	0	0	0	0	0	0	0	0	0	0	0	0	0	0	0	0	0		
	7:15 PM	0	0	0	0	0	0	0	0	0	0	0	0	0	0	0	0	0	0	0	0	0		
	7:30 PM	0	0	0	0	0	0	0	0	0	0	0	0	0	0	0	0	0	0	0	0	0		
	7:45 PM	0	0	0	0	0	0	0	0	0	0	0	0	0	0	0	0	0	0	0	0	0		
	8:00 PM	0	0	0	0	0	0	0	0	0	0	0	0	0	0	0	0	0	0	0	0	0		
	8:15 PM	0	0	0	0	0	0	0	0	0	0	0	0	0	0	0	0	0	0	0	0	0		
	8:30 PM	0	0	0	0	0	0	0	0	0	0	0	0	0	0	0	0	0	0	0	0	0		
	8:45 PM	0	0	0	0	0	0	0	0	0	0	0	0	0	0	0	0	0	0	0	0	0		
	9:00 PM	0	0	0	0	0	0	0	0	0	0	0	0	0	0	0	0	0	0	0	0	0		
	9:15 PM	0	0	0	0	0	0	0	0	0	0	0	0	0	0	0	0	0	0	0	0	0		
	9:30 PM	0	0	0	0	0	0	0	0	0	0	0	0	0	0	0	0	0	0	0	0	0		
	9:45 PM	0	0	0	0	0	0	0	0	0	0	0	0	0	0	0	0	0	0	0	0	0		
Totals		411	244	375	0	1030	453	1988	165	0	2606	157	263	386	0	806	580	2150	377	0	3107	7549		

Peak Hour All Vehicle Volume Summary

Hourly Time Period Start Time		From North (Eagle Dr) Right	Thru	Left	U-Tn	Total	From East (STH 60) Right	Thru	Left	U-Tn	Total	From South (Eagle Dr) Right	Thru	Left	U-Tn	Total	From West (STH 60) Right	Thru	Left	U-Tn	Total	Total Hourly Volume	PHF
AM	7:00 AM	67	15	78	0	160	84	208	14	0	306	23	20	26	0	69	34	326	68	0	428	963	0.84
MD	11:00 AM	76	28	55	0	159	40	230	21	0	291	9	23	51	0	83	68	229	50	0	347	880	0.92
PM	4:45 PM	54	34	53	0	141	80	266	35	0	381	21	38	51	0	110	98	246	56	0	400	1032	0.82

WisDot Southeast Region
Planning Unit 1
Forecast by: Brent DesRoches
Phone: 262-548-5611
Email: brent.desroches@dot.wi.gov

Projected AM Design Hour Traffic Volumes

Indicates roundabout

Design Hour: 7:00-8:00am

Forecast Completed: 4/16/2020

Design Hour Turning Movement Data

Project Description

Project ID(s): Jackson TIA
Route(s): STH 60
Region/COUNTY(IES): SE / Washington
Location: Jackson Dr to Eagle Dr

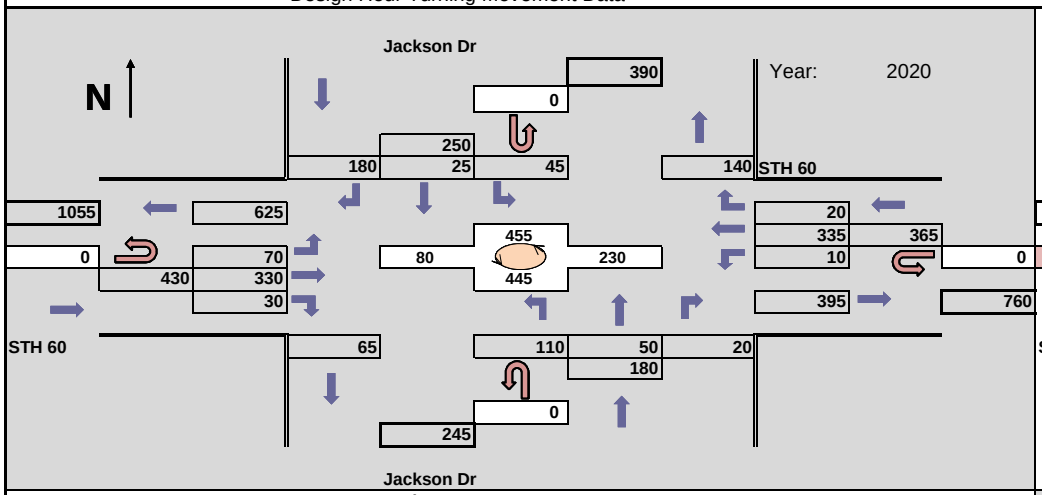

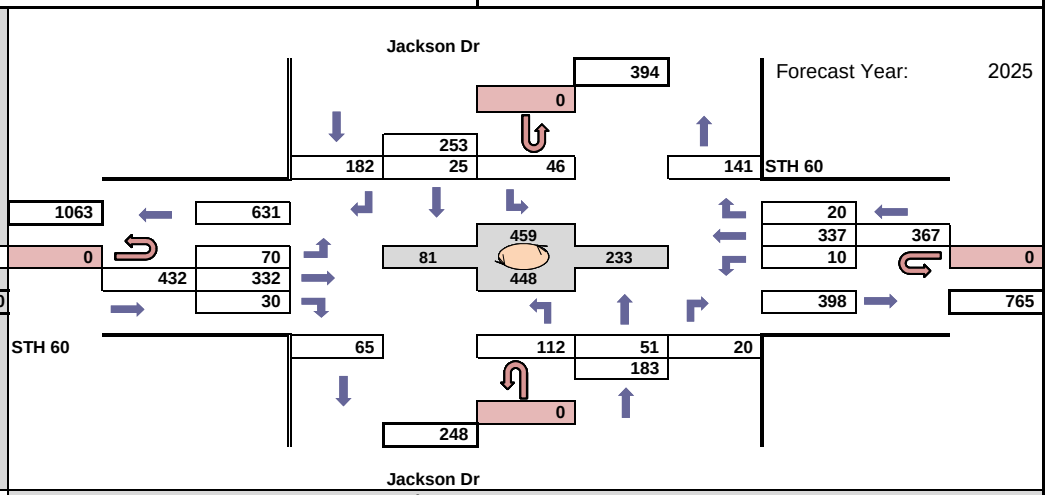

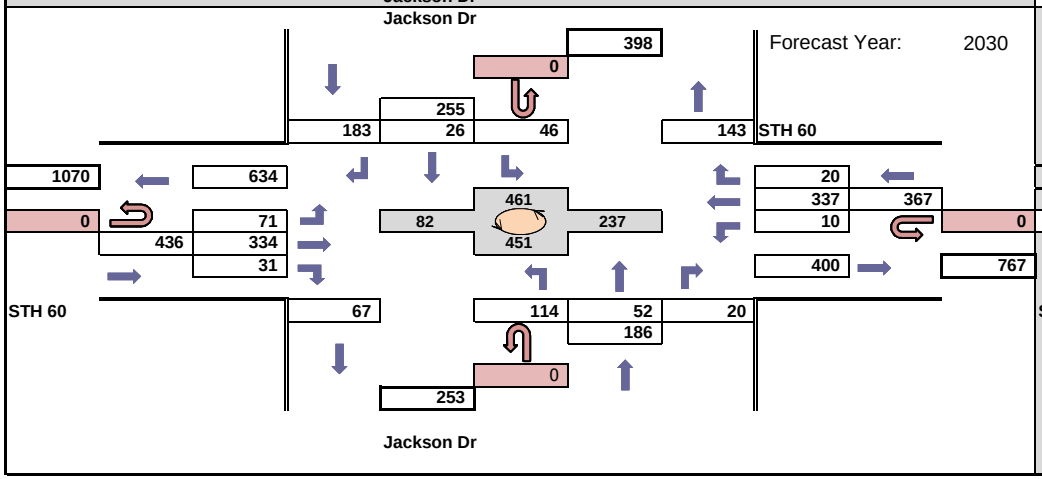

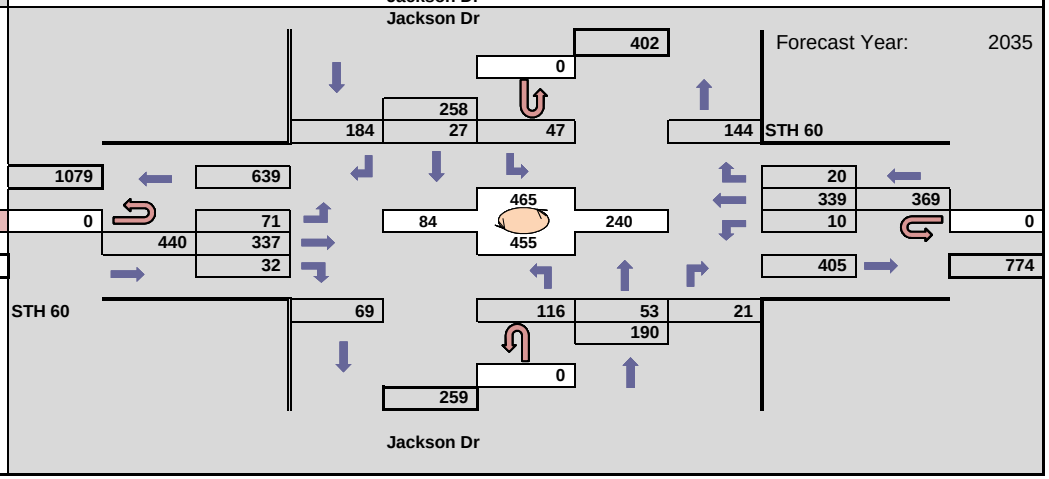

WisDot Southeast Region
Planning Unit 1
Forecast by: Brent DesRoches
Phone: 262-548-5611
Email: brent.desroches@dot.wi.gov

Projected SAT Midday Design Hour Traffic Volumes

Indicates roundabout

Design Hour: 11:00am-12:00pm

Forecast Completed: 4/16/2020

Design Hour Turning Movement Data

Project Description

Project ID(s): Jackson TIA
Route(s): STH 60
Region/COUNTY(IES): SE / Washington
Location: Jackson Dr to Eagle Dr

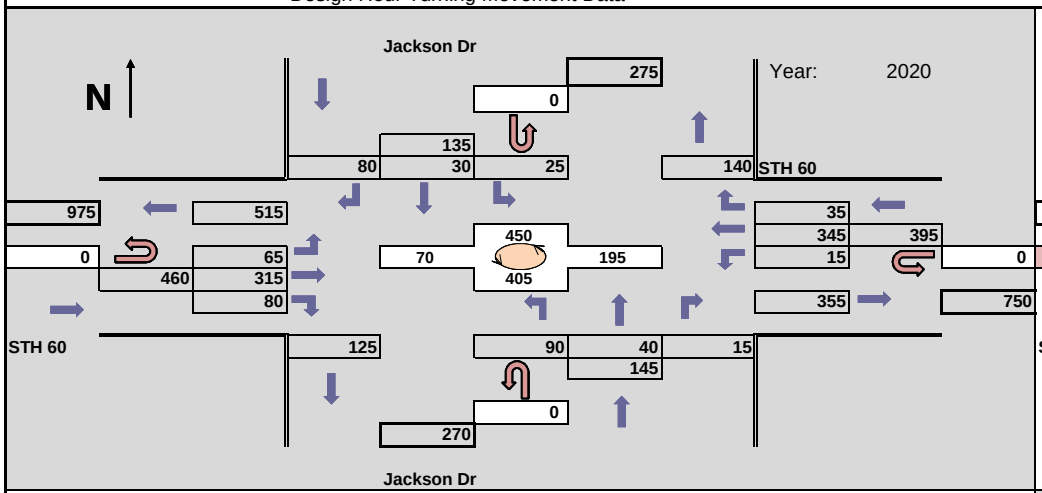

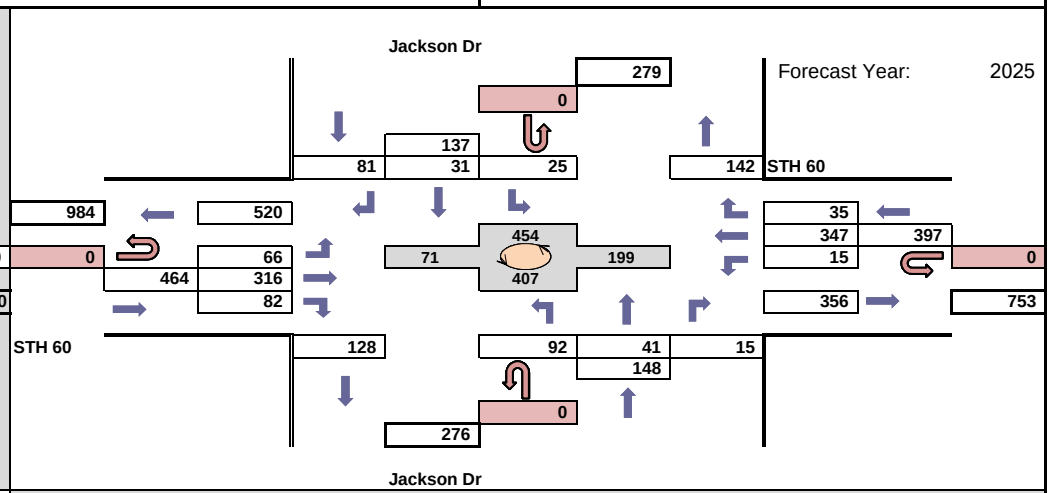

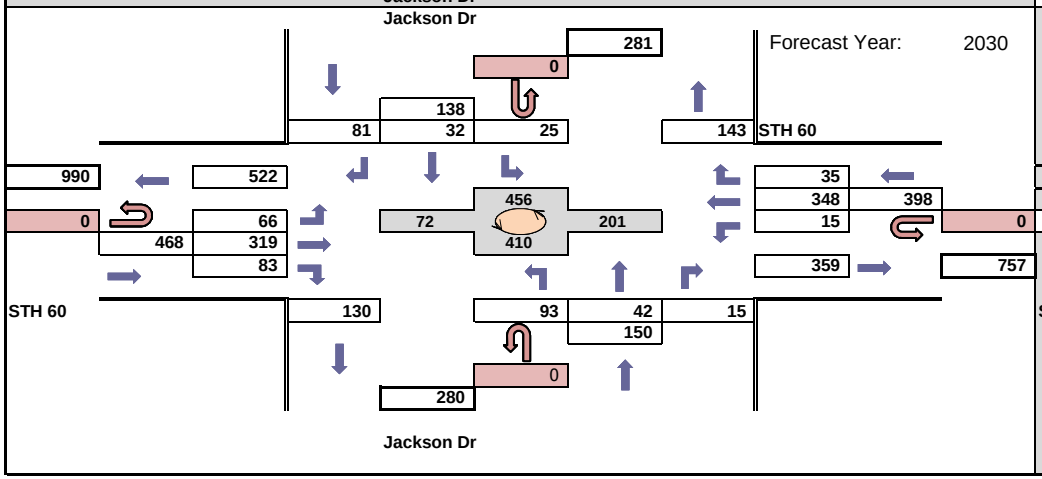

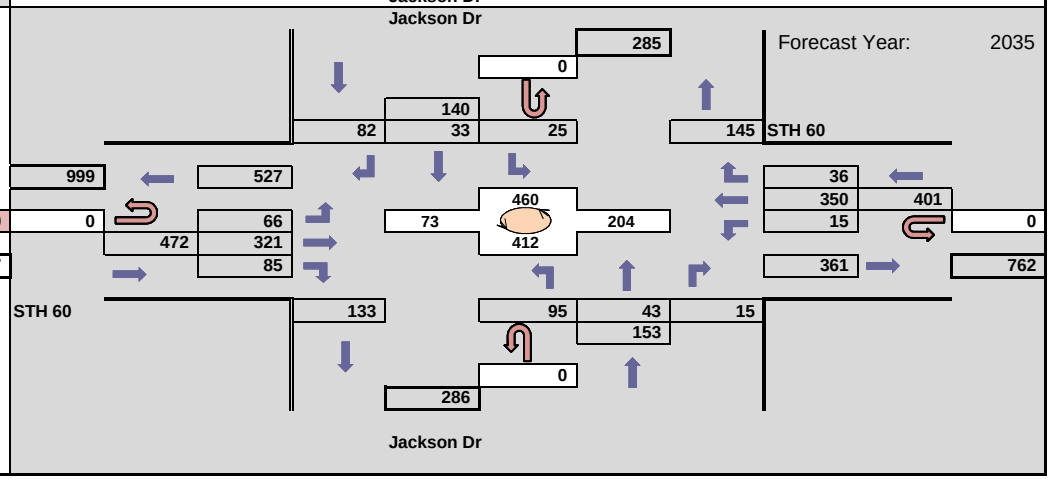

WisDot Southeast Region
Planning Unit 1
Forecast by: Brent DesRoches
Phone: 262-548-5611
Email: brent.desroches@dot.wi.gov

Projected PM Design Hour Traffic Volumes

Indicates roundabout

Design Hour: 4:30-5:30pm

Forecast Completed: 4/16/2020

Design Hour Turning Movement Data

Project Description

Project ID(s): Jackson TIA
Route(s): STH 60
Region/COUNTY(IES): SE / Washington
Location: Jackson Dr to Eagle Dr

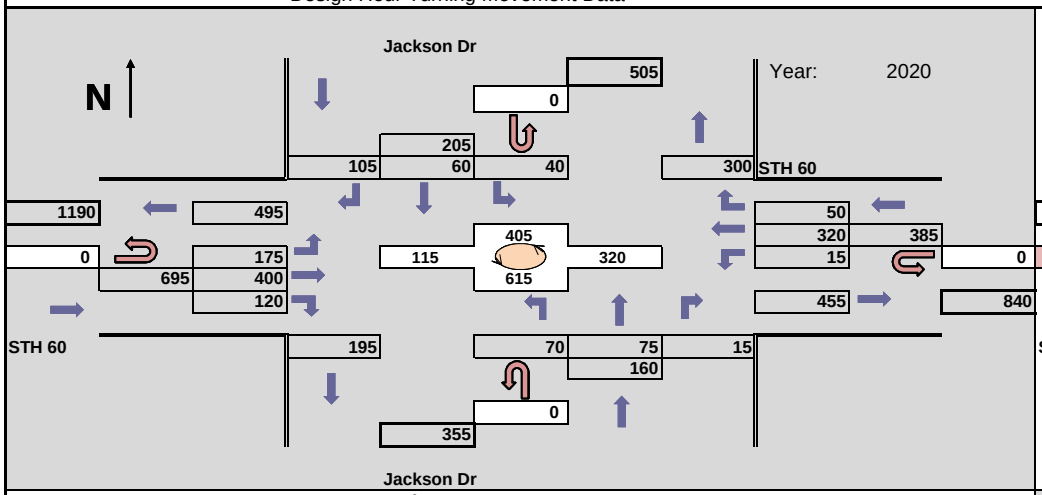

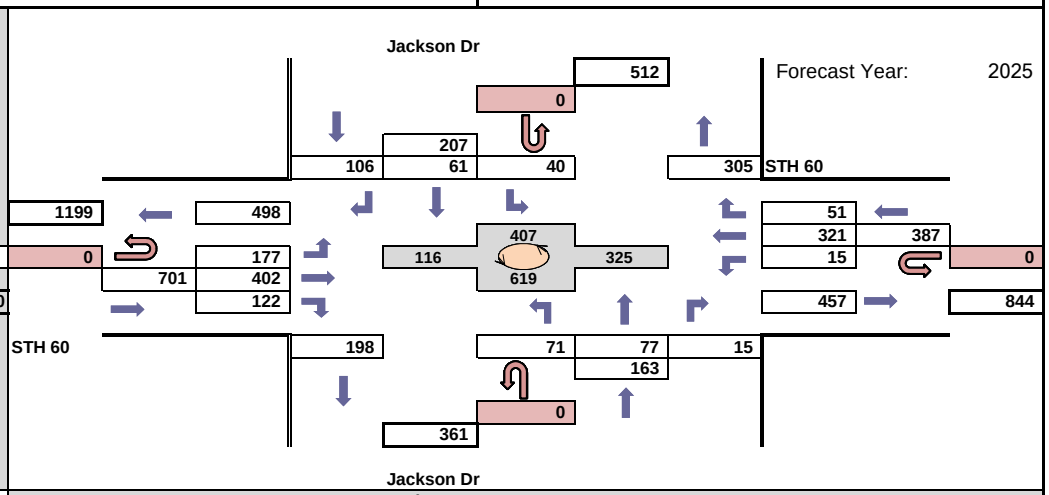

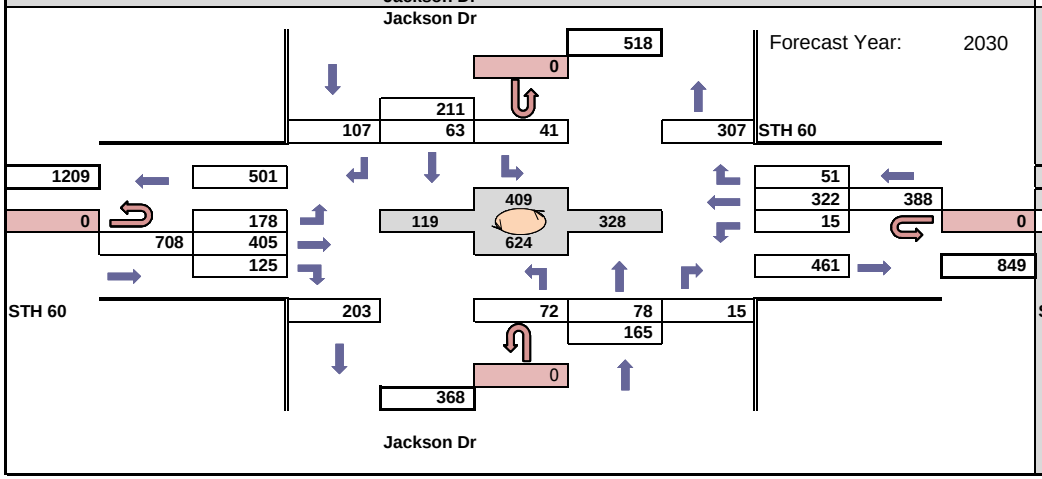

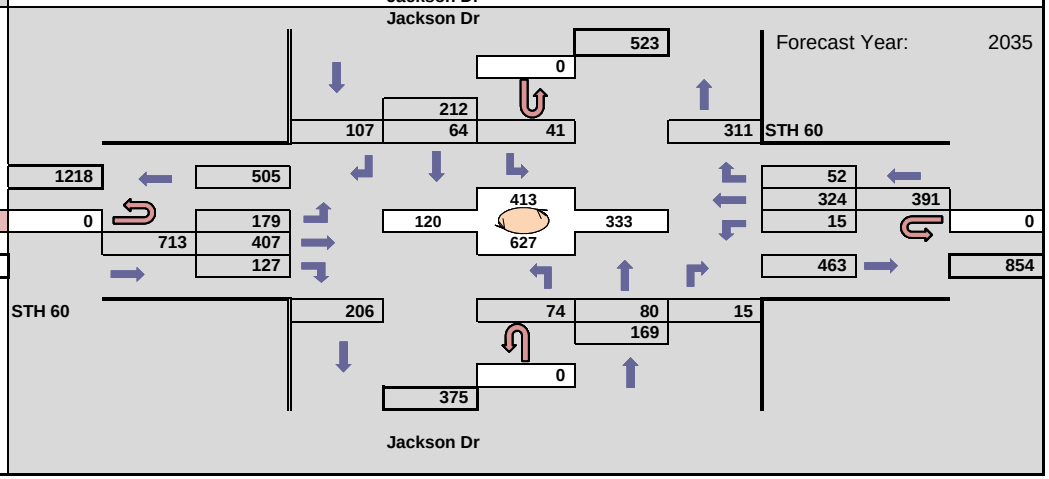

WisDot Southeast Region
Planning Unit 1
Forecast by: Brent DesRoches
Phone: 262-548-5611
Email: brent.desroches@dot.wi.gov

Projected AM Design Hour Traffic Volumes

Indicates roundabout

Design Hour: 7:00-8:00am

Forecast Completed: 4/16/2020

Design Hour Turning Movement Data

Project Description

Project ID(s): Jackson TIA
Route(s): STH 60
Region/COUNTY(IES): SE / Washington
Location: Jackson Dr to Eagle Dr

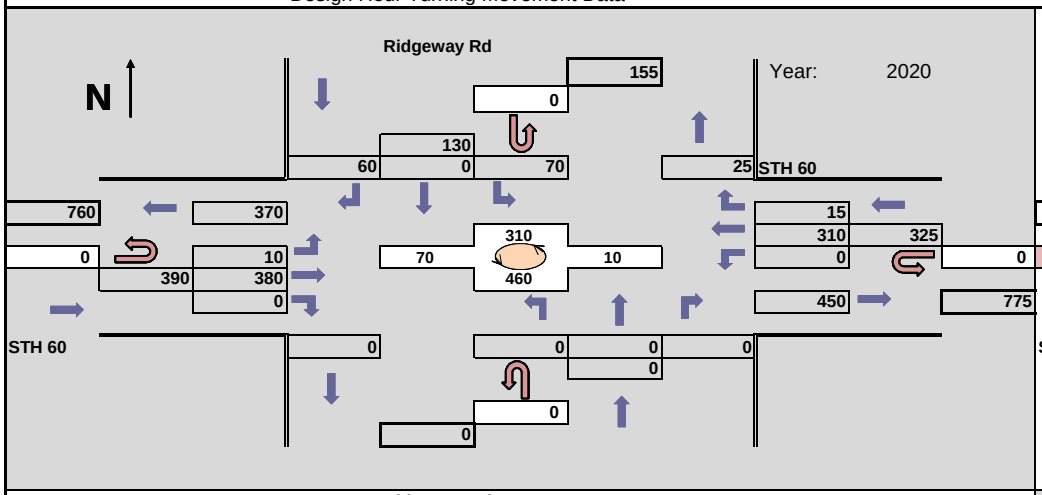

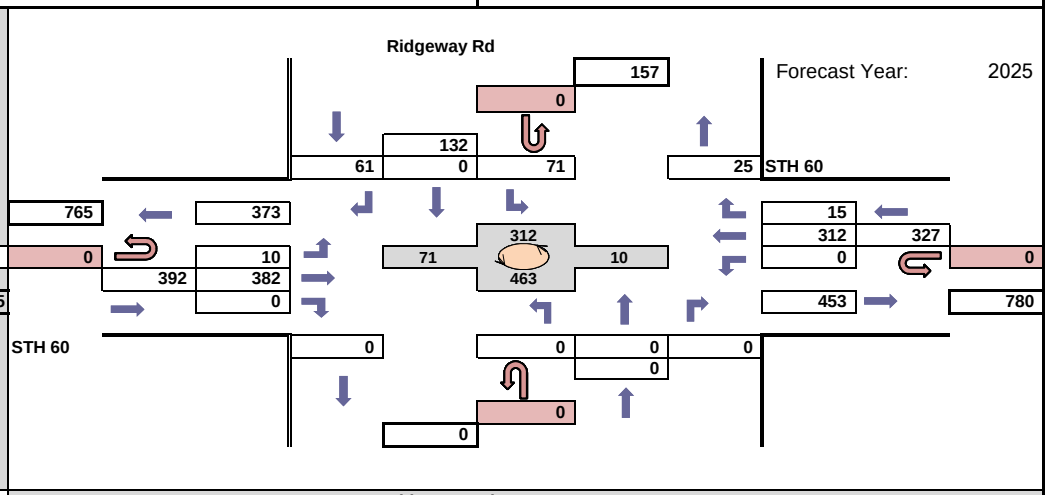

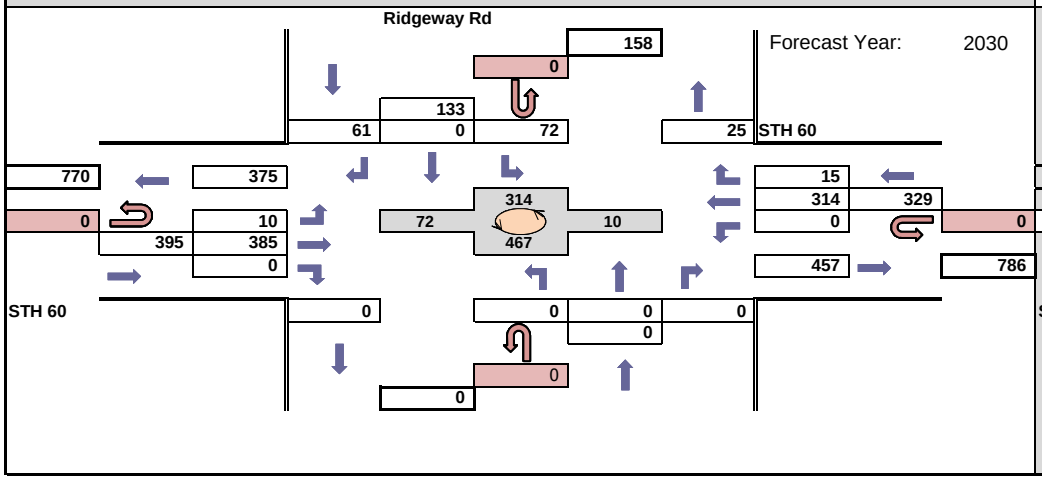

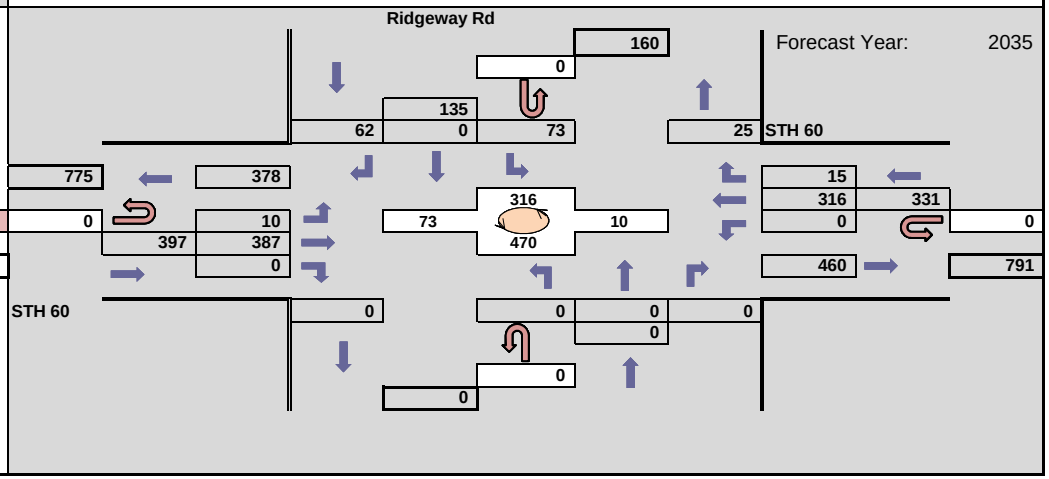

WisDot Southeast Region
Planning Unit 1
Forecast by: Brent DesRoches
Phone: 262-548-5611
Email: brent.desroches@dot.wi.gov

Projected SAT Midday Design Hour Traffic Volumes

Indicates roundabout

Design Hour: 11:00am-12:00pm

Forecast Completed: 4/16/2020

Design Hour Turning Movement Data

Project Description

Project ID(s): Jackson TIA
Route(s): STH 60
Region/COUNTY(IES): SE / Washington
Location: Jackson Dr to Eagle Dr

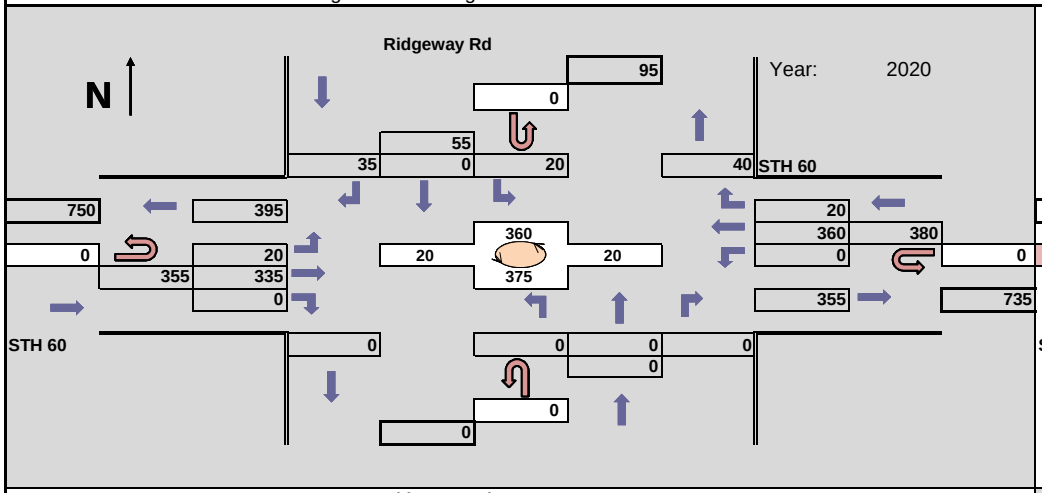

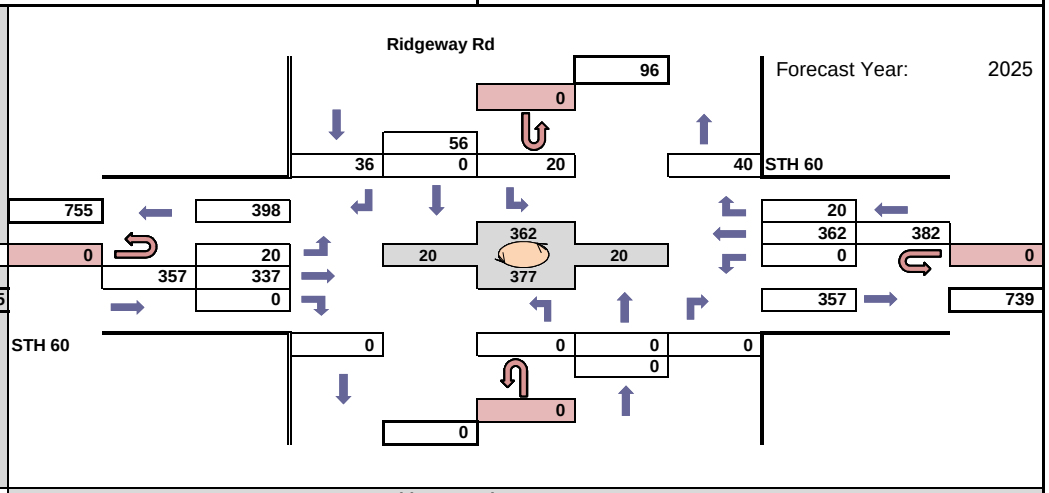

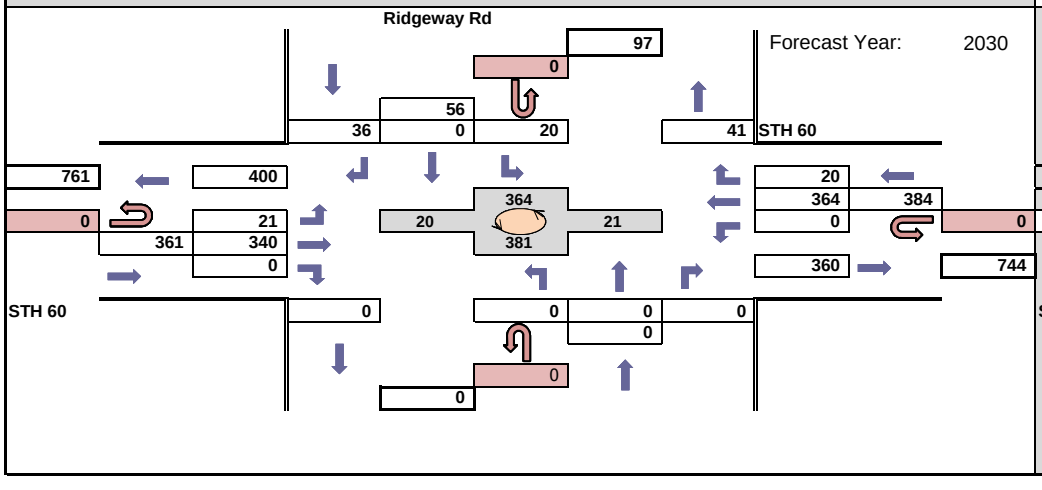

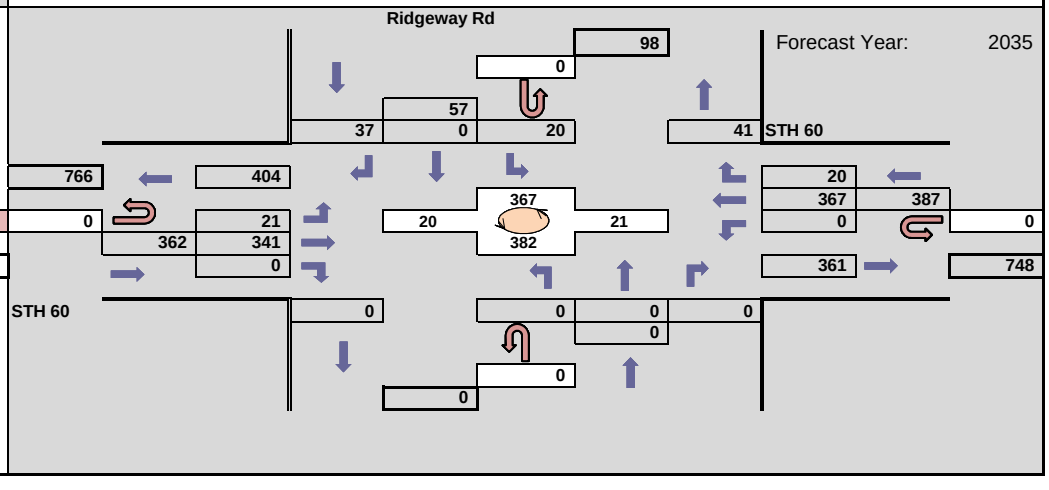

WisDot Southeast Region
Planning Unit 1
Forecast by: Brent DesRoches
Phone: 262-548-5611
Email: brent.desroches@dot.wi.gov

Projected PM Design Hour Traffic Volumes

Indicates roundabout

Design Hour: 4:30-5:30pm

Forecast Completed: 4/16/2020

Design Hour Turning Movement Data

Project Description

Project ID(s): Jackson TIA
Route(s): STH 60
Region/COUNTY(IES): SE / Washington
Location: Jackson Dr to Eagle Dr

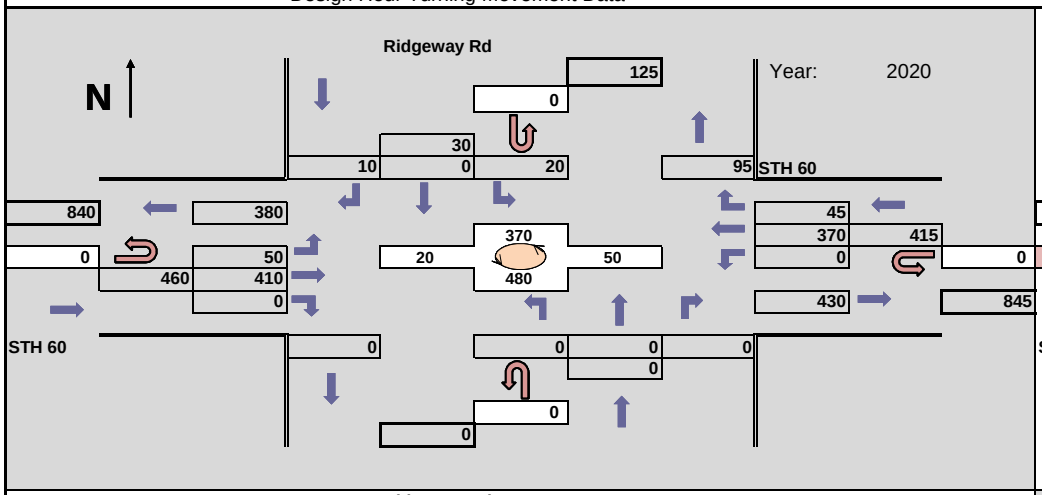

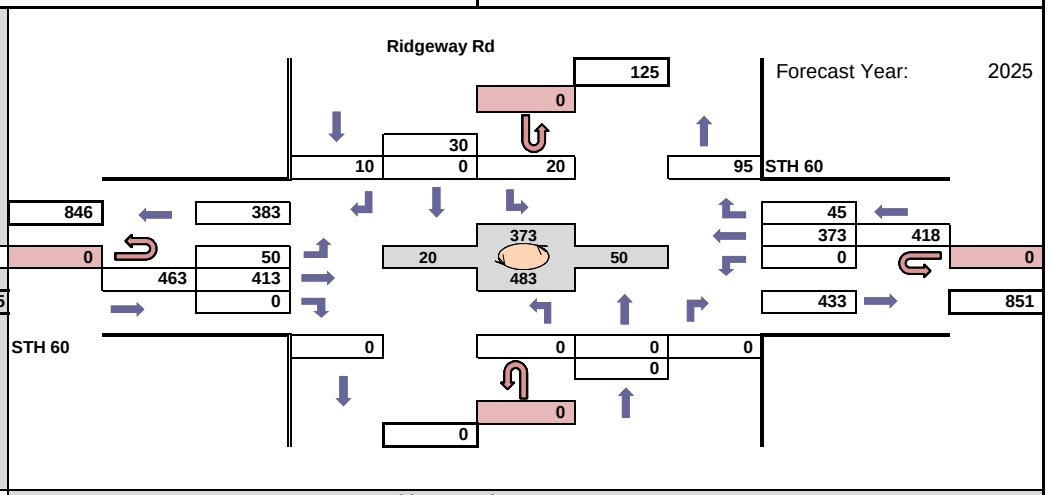

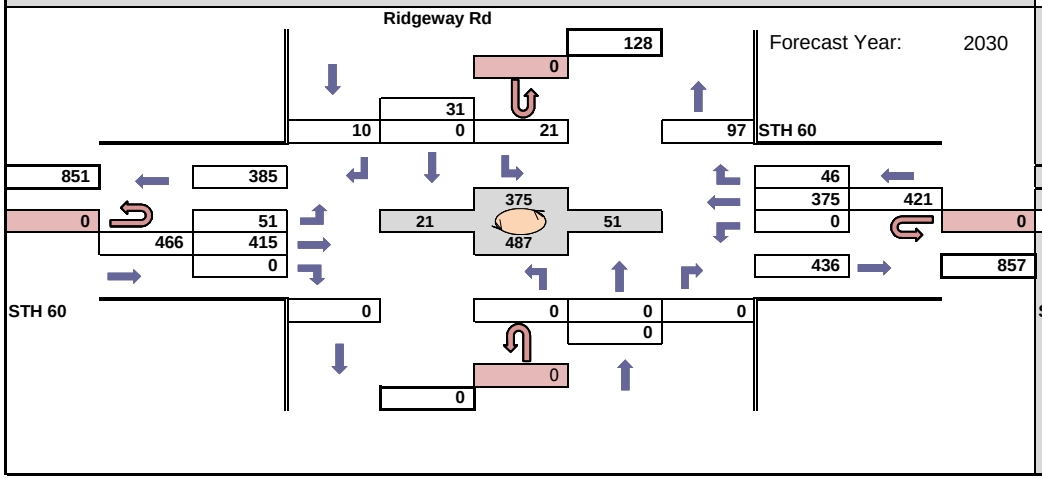

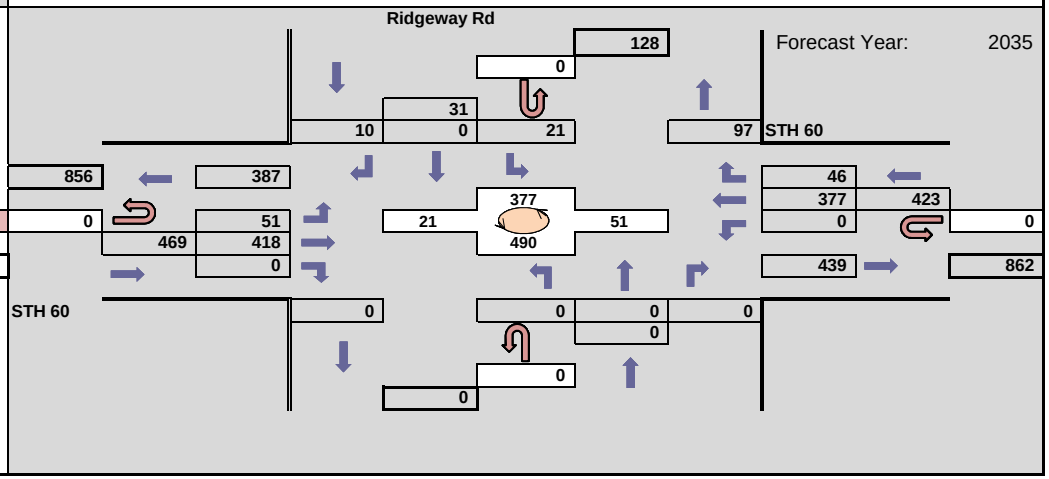

WisDot Southeast Region
Planning Unit 1
Forecast by: Brent DesRoches
Phone: 262-548-5611
Email: brent.desroches@dot.wi.gov

Projected AM Design Hour Traffic Volumes

Indicates roundabout

Design Hour: 7:00-8:00am

Forecast Completed: 4/16/2020

Design Hour Turning Movement Data

Project Description

Project ID(s): Jackson TIA
Route(s): STH 60
Region/COUNTY(IES): SE / Washington
Location: Jackson Dr to Eagle Dr

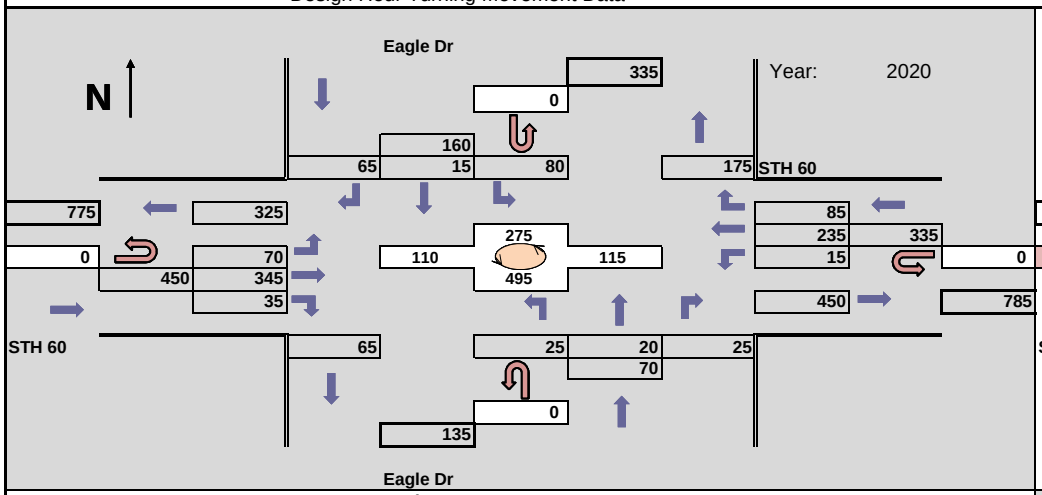

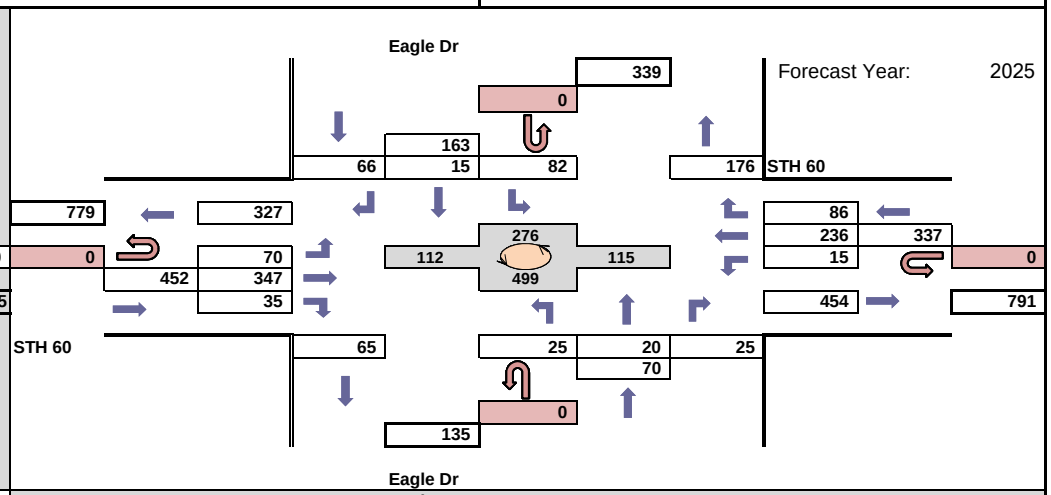

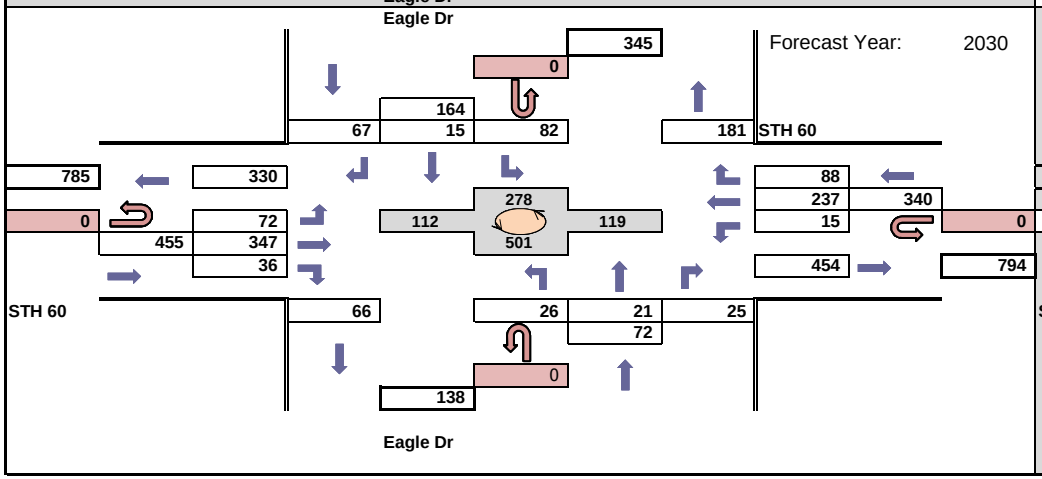

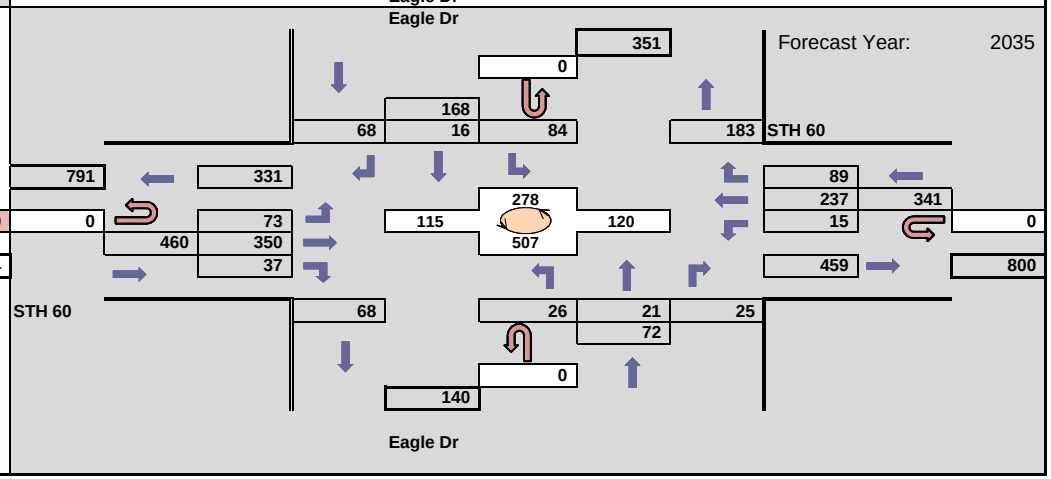

WisDot Southeast Region
Planning Unit 1
Forecast by: Brent DesRoches
Phone: 262-548-5611
Email: brent.desroches@dot.wi.gov

Projected SAT Midday Design Hour Traffic Volumes

Indicates roundabout

Design Hour: 11:00am-12:00pm

Forecast Completed: 4/16/2020

Design Hour Turning Movement Data

Project Description

Project ID(s): Jackson TIA
Route(s): STH 60
Region/COUNTY(IES): SE / Washington
Location: Jackson Dr to Eagle Dr

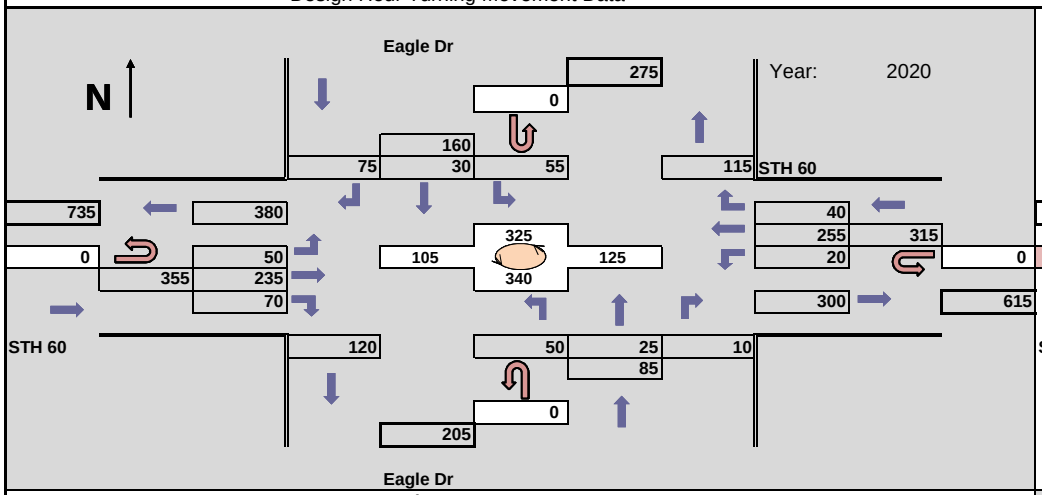

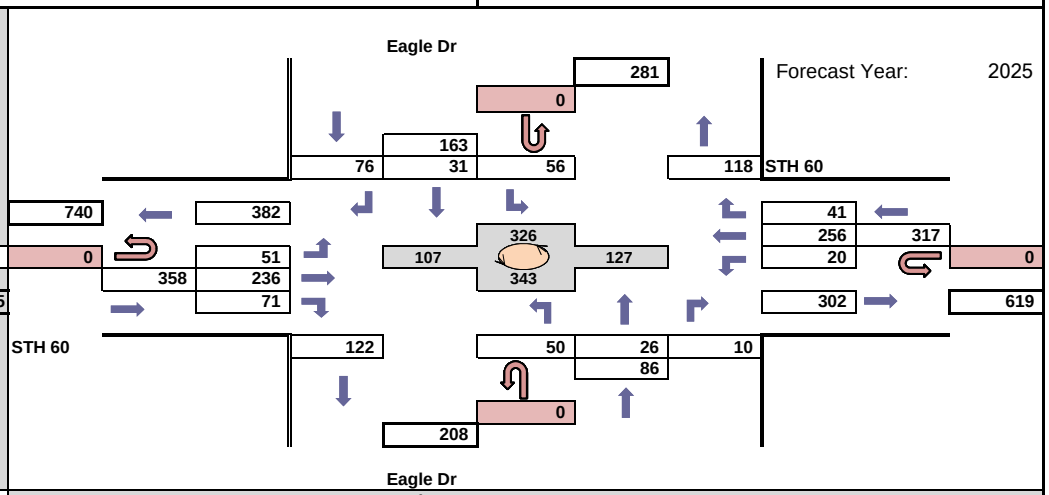

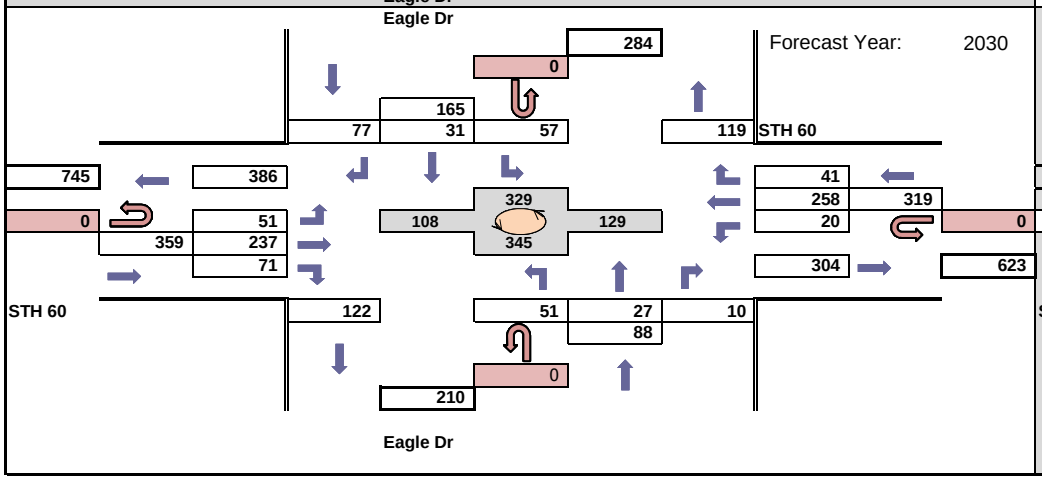

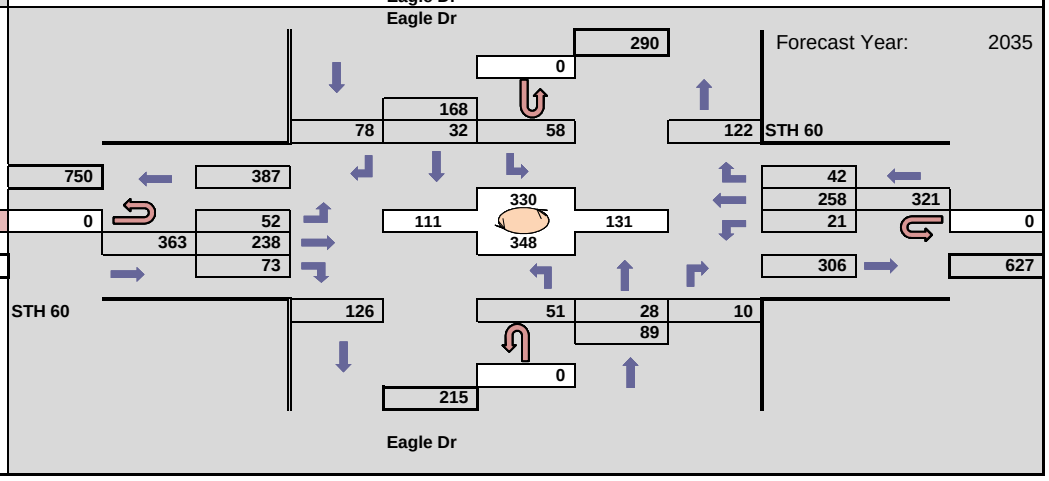

WisDot Southeast Region
Planning Unit 1
Forecast by: Brent DesRoches
Phone: 262-548-5611
Email: brent.desroches@dot.wi.gov

Projected PM Design Hour Traffic Volumes

Indicates roundabout

Design Hour: 4:30-5:30pm

Forecast Completed: 4/16/2020

Design Hour Turning Movement Data

Project Description

Project ID(s): Jackson TIA
Route(s): STH 60
Region/COUNTY(IES): SE / Washington
Location: Jackson Dr to Eagle Dr

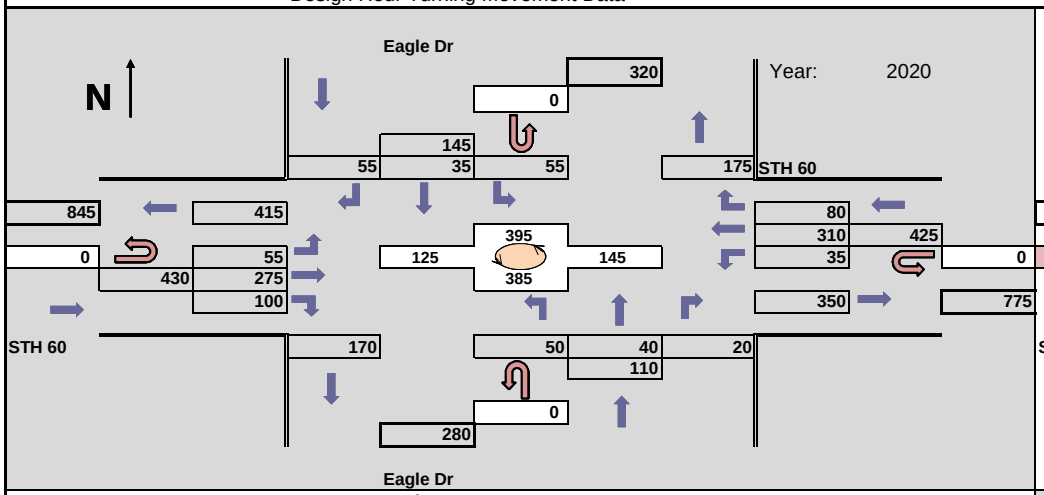

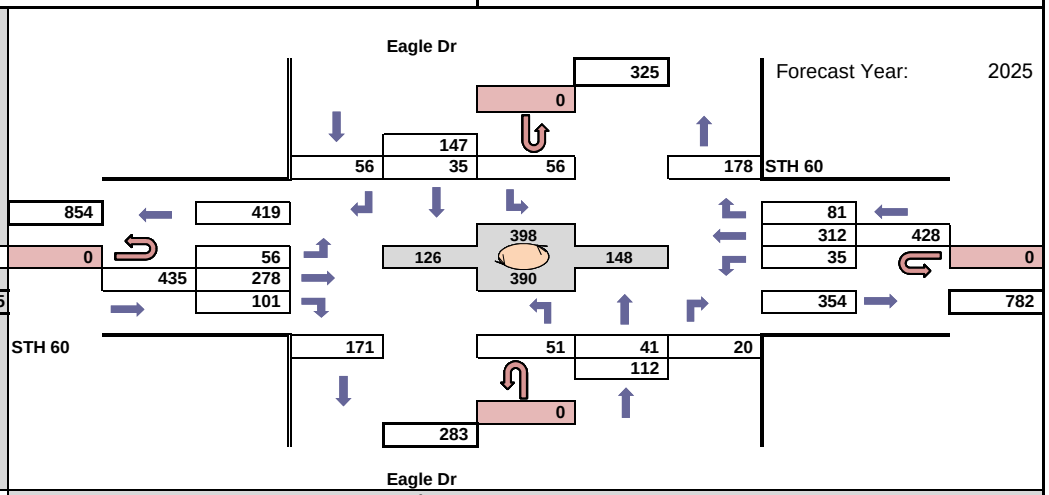

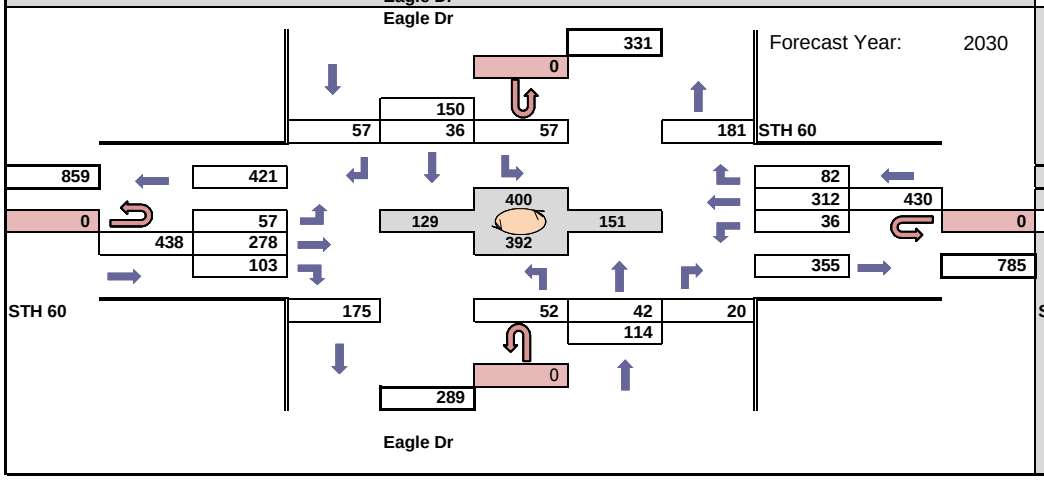

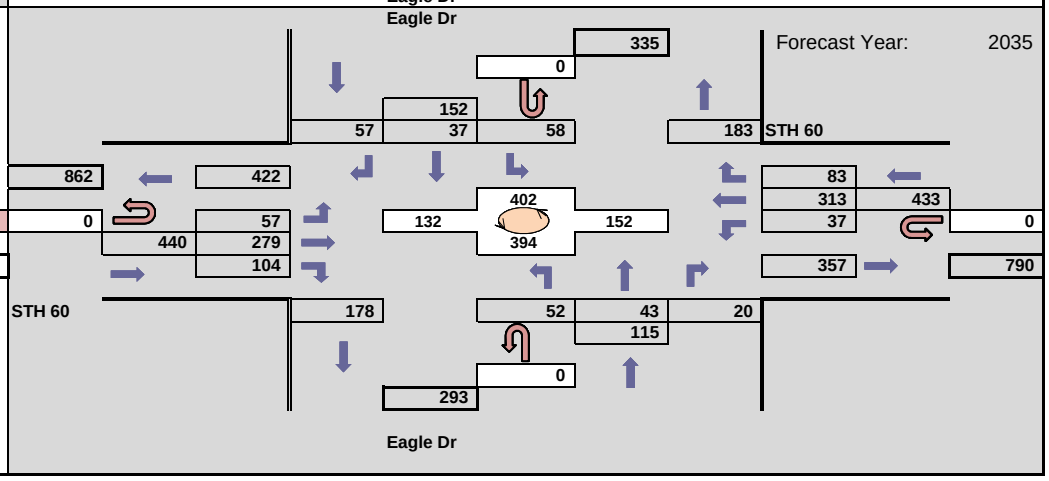

Speed Limit: 35 mph
Design Speed: 40 mph

Case B1: Left Turn from Minor*
P Upper - 590'
P Min - 445'

SU Upper - 710'
SU Min - 560'

Case B2: Right Turn from Minor*
P Upper - 475'
P Min - 385'

SU Upper - 590'
SU Min - 500'

Case B3: Crossing from minor**
P Upper - 415'
P Min - 385'

SU Upper - 590'
SU Min - 500'

Case F: Left turn from Major***
P Upper - 475'
P Min - 325'

SU Upper - 475'
SU Min - 385'

*See Image for visual representation
**Applicable at Ridgeway Drive Only
***WIS 60 is primarily a flat roadway therefore vertical SD is not anticipated to interfere with turns on major

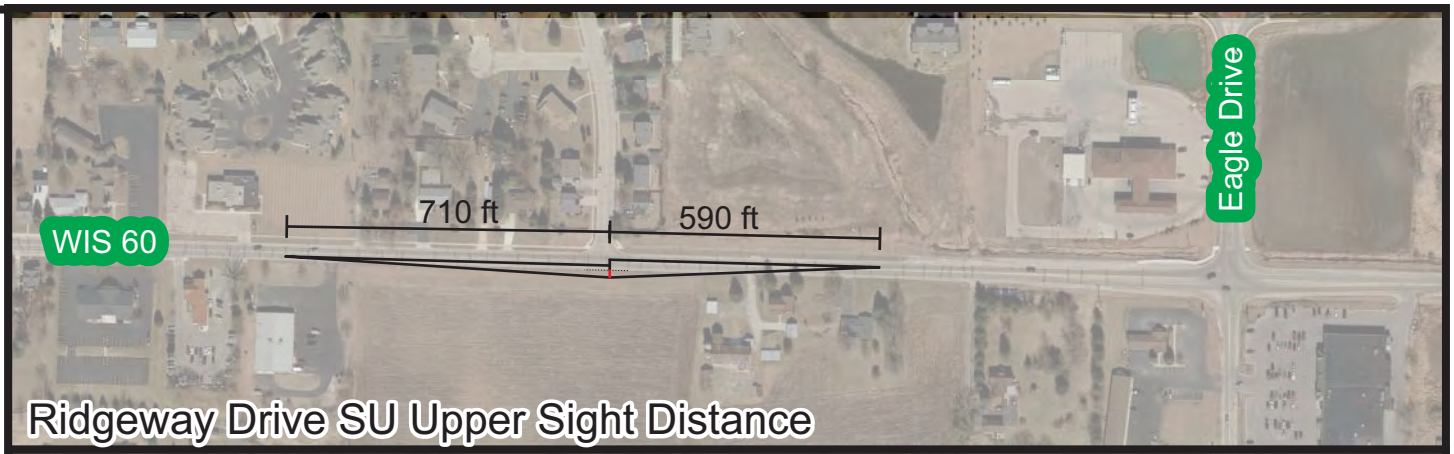

Ridgeway Drive SU Upper Sight Distance

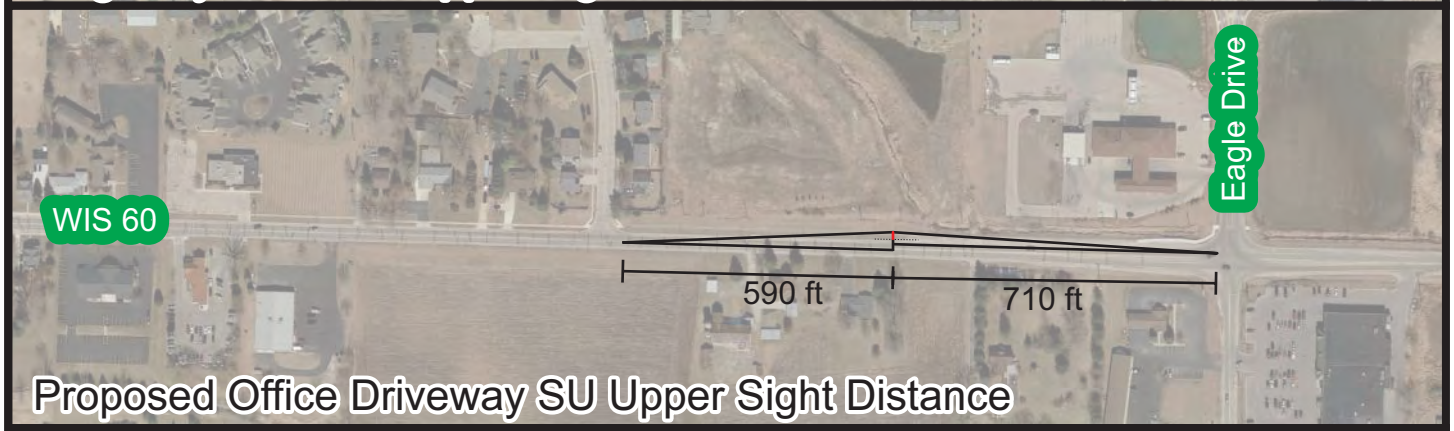

Proposed Office Driveway SU Upper Sight Distance

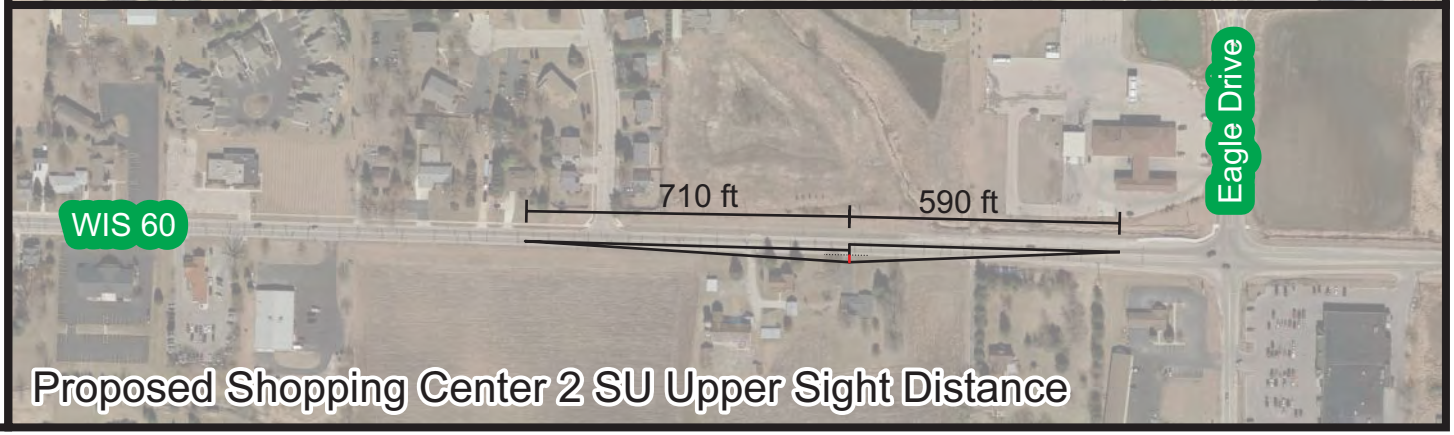

Proposed Shopping Center 2 SU Upper Sight Distance

SRF Consulting Group, Inc.

Sight Distance Calcs

Jackson TIF District TIA

Village of Jackson, WI

Appendix A

13292
May 2020

2

LEGEND

- CONTROL CABINET
- NONMETALLIC CONDUIT 2", UNLESS OTHERWISE NOTED
- SIGNAL HEAD, TRAFFIC SIGNAL STANDARD, PEDESTAL BASE
- (XX) SIGNAL HEAD, TRAFFIC SIGNAL POLE, TRANSFORMER BASE
- PEDESTRIAN HEAD WITH PUSH BUTTON
- LUMINAIRE, TRAFFIC POLE, TRANSFORMER BASE
- LOOP DETECTOR CONDUIT 1" NONMETALLIC
- LOOP DETECTOR IN 1" NONMETALLIC CONDUIT
- (B) EVP DESIGNATOR
- EVP DETECTOR HEAD
- PULL BOX, 24" X 36"
- PULL BOX, 12" X 24"
- (R) RED CIRCULAR INDICATOR
- (Y) YELLOW CIRCULAR INDICATOR
- (G) GREEN CIRCULAR INDICATOR
- YELLOW ARROW
- GREEN ARROW
- VIDEO DETECTION AREA
- VX VIDEO DETECTION CAMERA
- WALK/DON'T WALK INDICATOR 16" (COUNTDOWN TIMER)

NOTE: ALL LENSES ARE 12-INCH
GRAYSHADE REPRESENTS EXISTING

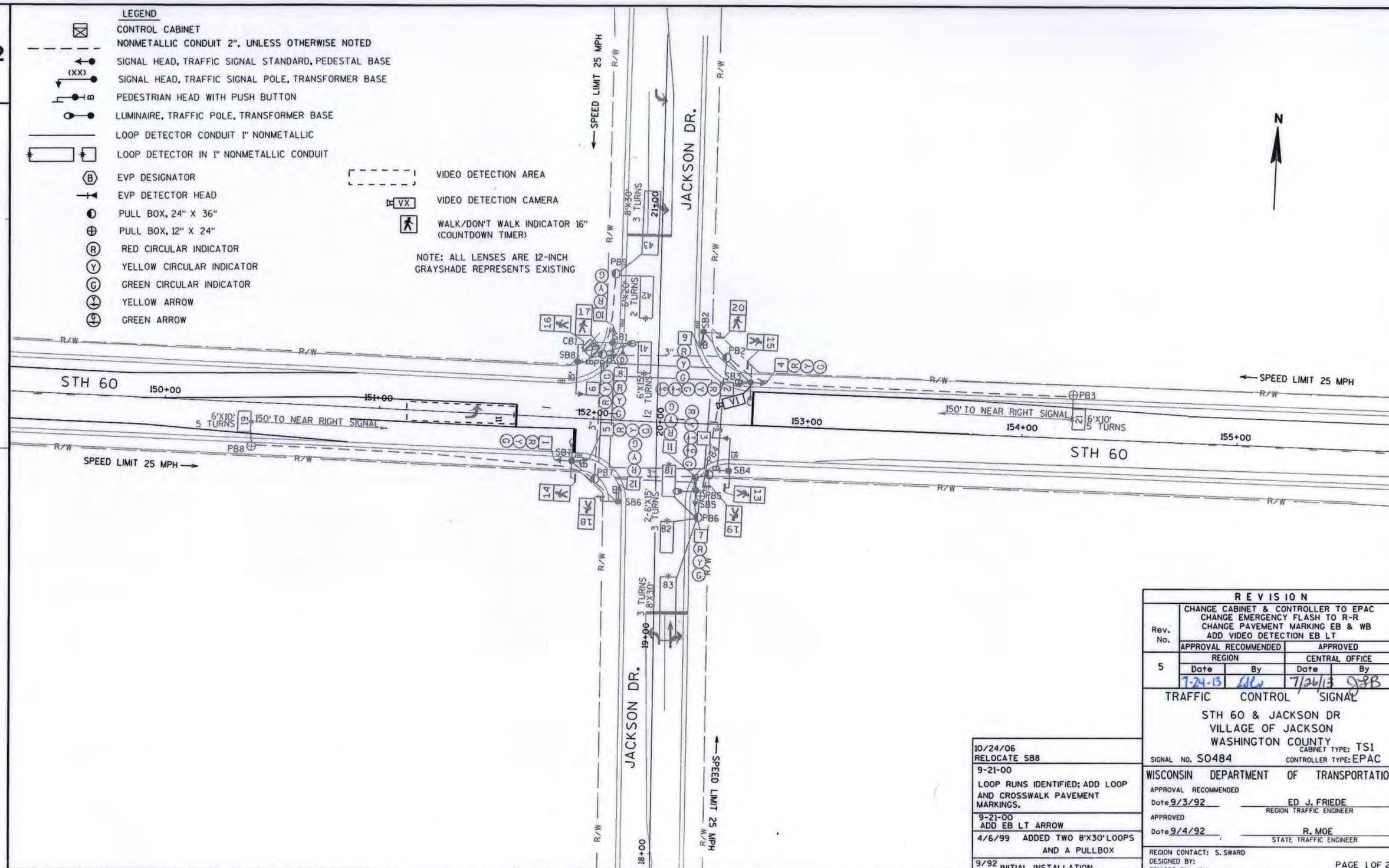

REVISION				
Rev. No.	CHANGE CABINET & CONTROLLER TO EPAC CHANGE EMERGENCY FLASH TO R-R CHANGE PAVEMENT MARKING EB & WB ADD VIDEO DETECTION EB LT			
	APPROVAL RECOMMENDED		APPROVED	
	REGION		CENTRAL OFFICE	
	Date	By	Date	By
5	7-24-13	EDW	7/26/13	DJB

10/24/06 RELOCATE SB8	
9-21-00	LOOP RUNS IDENTIFIED; ADD LOOP AND CROSSWALK PAVEMENT MARKINGS.
9-21-00 ADD EB LT ARROW	
4/6/99	ADDED TWO 8'X30' LOOPS AND A PULLBOX
9/92	INITIAL INSTALLATION

TRAFFIC CONTROL SIGNAL

STH 60 & JACKSON DR
VILLAGE OF JACKSON
WASHINGTON COUNTY

SIGNAL NO. S0484 CABINET TYPE: TS1 CONTROLLER TYPE: EPAC

WISCONSIN DEPARTMENT OF TRANSPORTATION

APPROVAL RECOMMENDED
Date 9/3/92 ED J. FRIEDE, REGION TRAFFIC ENGINEER

APPROVED
Date 9/4/92 R. MOE, STATE TRAFFIC ENGINEER

REGION CONTACT: S. SWARD
DESIGNED BY:
REVISED BY: JAJ

PAGE 1 OF 2

SJS 7/24/13

PROJECT NO: 0082-03-01	HWY: STH 60	COUNTY: WASHINGTON	TRAFFIC SIGNAL PLAN	SHEET	E

SEQUENCE OF OPERATION

NOT USED

		HEAD NUMBERS	01 R/W	01 CLEAR TO **					02 R/W	02 CLEAR TO **					03 R/W	03 CLEAR TO **					04 R/W	04 CLEAR TO **					FLASH
RING 1	01	2,3	G	Y	-				-	-	-										-	-	-				-
	02	4,5,6	R	R	R				G	Y	R										R	R	R				R
	03																										
	04	10,11,12	R	R	R				R	R	R										G	Y	R				R
	05																										
	06	1,2,3	R	R	R				R	R	R										R	R	R				R
	07																										
	08	7,8,9	R	R	R				R	R	R										R	R	R				R
	02P	15,16	DW	DW	DW				*	DW	DW										DW	DW	DW				
	04P	17,18	DW	DW	DW				DW	DW	DW										*	DW	DW				
	06P	13,14	DW	DW	DW				DW	DW	DW										DW	DW	DW				
	08P	19,20	DW	DW	DW				DW	DW	DW										DW	DW	DW				

NOT USED

		HEAD NUMBERS	05 R/W	05 CLEAR TO **					06 R/W	06 CLEAR TO **					07 R/W	07 CLEAR TO **					08 R/W	08 CLEAR TO **				
RING 2	01	2,3							-	-	-										-	-	-			
	02	4,5,6							R	R	R										R	R	R			
	03																									
	04	10,11,12							R	R	R										R	R	R			
	05																									
	06	1,2,3							G	Y	R										R	R	R			
	07																									
	08	7,8,9							R	R	R										G	Y	R			
	02P	15,16							DW	DW	DW										DW	DW	DW			
	04P	17,18							DW	DW	DW										DW	DW	DW			
	06P	13,14							*	DW	DW										DW	DW	DW			
	08P	19,20							DW	DW	DW										*	DW	DW			

N

BARRIER

** CLEARANCE TO A PHASE IN CONFLICT WITH THIS PHASE ON (SEE CHART 1)

* WHEN CALLED, TIMED STEADY WALK, THEN FLASHING DON'T WALK, THEN GOES TO STEADY DON'T WALK

CHART 1

PHASE ON	NONCONFLICTING PHASE ALLOWED TO TIME CONCURRENTLY	PHASES IN CONFLICT WITH PHASE ON
01	6	2,4,8
02	6	1,4,8
03		
04	8	1,2,6
05		
06	1 OR 2	4,8
07		
08	4	1,2,6

DETECTOR LOGIC

DETECTOR NUMBER	AMPLIFIER CHANNEL NUMBER	DETECTOR OPERATION: CALLS AND EXTENDS	CALLS ONLY	EXTENDS ONLY	PHASE CALLED	PHASE EXTENDED	DETECTOR DISCONNECT PHASE	CALLING DELAY	EXTENSION STRETCH	SIZE	NUMBER OF TURNS
11		X			1	1				VIDEO	
21	1	X			2	2				6X10	5
41	2	X			4	4		X		6X15	2
42	2	X			4	4		X		6X20	2
43	3	X			4	4		X		8X30	3
61	4	X			6	6				6X10	5
81	5	X			8	8		X		6X15	3
82	5	X			8	8		X		6X15	3
83	6	X			8	8		X		8X30	3

CONTROLLER LOGIC

PHASE NUMBER	PHASE LOCKING	DUAL ENTRY W / Ø	PHASE RECALL	PHASE ACTIVE
1		6		X
2	X	6	MIN.	X
3				
4		8		X
5				
6	X	2	MIN.	X
7				
8		4		X

OVERLAPS

O.L. "A" =
O.L. "B" =
O.L. "C" =
O.L. "D" =

TYPE OF INTERCONNECT	
NONE	X
TBC	
CLOSED LOOP	
HARDWIRE	
TONE (FREQ)	
FIBER OPTIC	

TYPE OF PRE-EMPT	
NONE	
RAILROAD	
EMERGENCY VEHICLE	X
3M	X
TOMAR	
HARDWIRE	
OTHER	
LIFT BRIDGE	
QUEUE DETECTOR	

TYPE OF LIGHTING	
NONE	
IN TRAFFIC CONTROL CABINET	X
IN SEPARATE CONTROL CABINET	

EMERGENCY VEHICLE PREEMPTION SEQUENCE

EMERGENCY VEHICLE PREEMPTOR	D
MOVEMENT	↓ ↑
PHASE	4+8

AFTER PREEMPTION SEQUENCE 4+8, CONTROLLER SHALL RETURN TO PHASES 4+8.

GENERAL NOTES:

1. ANY ACTUATED PHASE FOR WHICH THERE IS NO CALL SHALL BE SKIPPED.
2. WHEN ONE PHASE IS ON ALONE, ANY NONCONFLICTING PHASE MAY START TIMING CONCURRENTLY WITHOUT A CLEARANCE INTERVAL. (SEE CHART 1 AT LEFT.)
3. IF ANY OPPOSING THRU PHASES ARE TIMING CONCURRENTLY, THEY SHALL TERMINATE TOGETHER DUE TO PERMISSIVE LEFT TURN CONFLICT.

STH 60 & JACKSON DR
VILLAGE OF JACKSON
WASHINGTON CO

SIGNAL NO. S0484
CONTROLLER TYPE: EPAC
DATE 7/13 PAGE NO. 2 OF 2

7-24-13 SJS 7/24/13

Timing Cover Sheet for Signal: S0484 HWY: 60 and Jackson Dr

Date:	9/4/2015	Changes Made By:	D. Dedrick
Signal No	S0484 **S484**	Highway:	60
County:	WAS	Local Hwy:	Main St
Controller:	EPAC	Location:	Jackson Dr
School:	Elementary	Audible Ped:	No

Pre-emption

Emergency:	Yes	Type:	3M Opticom	Phases:	8	EVP Maintenance Id:	0663-42-26
Railroad:	No	Type:		Phases:		EVP Contact:	Fire Chief, John Skodinski
						Community:	Jackson, Village of
						Contact Phone:	(262) 677-3811
						Alternate Phone:	

Coordination

System No:

CoordType:

Dip Switch Setting

DS ☑

Controller IP Address:

Comments:

TBC:	No
Tone:	No
Closed Loop:	No
Hardwire:	No

	Length	Split 1	Split 2	Split 3	Split 4
Cycle 1=					
Cycle 2=					
Cycle 3=					
Cycle 4=					

Prom Replacement

Signal Plan No

Pre-empt: Yes

Part of a Local System: No

Local Contact:

Phone Number:

Overlaps

Overlap A= Phases:

Overlap B= Phases:

Overlap C= Phases:

Overlap D= Phases:

Flash

Emergency Y-R

Off Peak: No

Off Peak Times

Detector Timing

Dilemna Zone No

Video Detection:

Detector Number	41	42	43	81	82	83								
Stretch														
Right Turn Delay	8.0	8.0		8.0	8.0									
Left Turn Delay			2.0			2.0								

Unique Features

Loops 43 and 83 are on 2s delay for people exiting the driveway that may put in a false call.

Timing Changes Log for Signal S0484 on Hwy 60 in WASHINGTON County

Jackson Dr

Date Computer Changed	Date Change Made in Field	Timing Change	Reason for Change	Change By	Temp Timing
09/04/15	9/4/2015	Update timing.	Timing and operation review	D. Dedrick	No
06/03/14	6/6/2014	Increase red times due to set back stop bars and added EB LT.	Contacted by Village of Jackson.	D. Dedrick	No
07/26/13	7/18/2013	reduced min and increased max1 for phase 1, adjusted startup time	match field conditions, follow MUTCD	S. Sward	No
07/15/13	7/17/2013	Updated timing parameters, input in MarcNX	Changed cabinet/controller	S. Sward	No
03/13/12	3/14/2012	Extended pedestrian clearance intervals - changed walking speed from 4.0 ft/s to 3.0 ft/s.	Police complaint - elementary students didn't have enough time to safely cross the street.	J. Effinger	No
08/21/07	8/21/2007	For day program 1, circuit 9 - Max 1 must also be operating in order to run Max 2. Turned on Max 1 for day program 1 from 2:30 pm - 6:00 pm M-F.	Max 2 not running - citizen complaint.	D. Brantner	No
06/29/07	6/29/2007	Updated programming to run max 2 for phase 1. Increased max 2 to 25 sec for phase 1. Max 2 for phase 1 runs M-F 2:30 pm - 6:30 pm. Max 1 for phase 1 runs 6:30 am - 9:00 am M-F and 6:30 am -9:00 am & 2:30 pm - 6:00 pm Sat & Sun.	Hardwire to bring up Max 2 added.	D. Brantner	No
06/19/07		Increased max green time for phase 1 to 21 sec. Updated min green, TBR, TTR to current timing standards. Decreased all red for phase 1 to 0.5 sec.	Citizen complaint - to short of green time for EB LT durning PM Peak.	D. Brantner	No
02/13/07		DST	DST	S. Pierce	No
04/03/06		DST	DST	D. Lucente	No

Timing Changes Log for Signal S0484 on Hwy 60 in WASHINGTON County

Jackson Dr

Date Computer Changed	Date Change Made in Field	Timing Change	Reason for Change	Change By	Temp Timing
09/15/04	9/15/2004	Put loops 43 and 83 on 2s left turn delay.	To avoid false calls due to adjacent driveway.	J. Haug	No
09/10/04	9/10/2004	Increased Max. Times for Phases 2,4,6 & 8.	Increase efficiency.	J. Haug	No
03/13/03		min green 15 sec, red clearance 1 sec, max 1 15 sec, dual entry associations, Aux 1 (EB LT arrow) AUTO, and time clock week program all 1s	Dick Moore found there were differences in the transfer file and disk while completing a cabinet check	M. Milam	No
04/27/01		Ph. 1 Min g, y, ar, maxes, max init, phase used, dual entry assoc.	Add Phase 1 by timeclock, request from Village	S. Pierce	No
07/09/99	7/7/1999	Ph. 4 & Ph. 8 Yellow	Stopbars moved back	S. Pierce	No

Programmed EPAC Data

9/2/2015
8:42:36AM

Intersection Name: SE66S0484 STH 60 & Jackson Dr **Intersection Alias: S0484**

Access Code: 9999 Channel: 1 Address: 0 Revision: Unknown
IP:

Access Data

3: 1200 Baud
2: 19200 Baud

Phase Data

Vehical Basic Timings / Vehical Density Timings

Phase	Min_Grn	Passage	Max1	Max2	Yellow	All Red	Added Initial	Max_Initial	Time B4 Reduction	Cars Before	Time To Reduce	Min_Gap
1	8	1.5	25	25	3.5	3.0	0.0	8	25	0	0	1.5
2	15	4.1	45	45	3.0	2.3	2.7	16	16	0	29	2.0
4	10	1.5	35	35	3.0	3.5	0.0	10	35	0	0	1.5
6	15	4.1	45	45	3.0	2.3	2.7	16	16	0	29	2.0
8	10	1.5	35	35	3.0	3.5	0.0	10	35	0	0	1.5

Pedestrian Timing / General Control / Miscellaneous

Phase	Walk	Ped Clear	Flashing Walk	Extended Ped Clear	Actuated Rest in Walk	Initialize	Non-Act Response	Veh Recall	Ped Recall	Recall Delay	Non Lock	Dual Entry	Last Car Passage	Conditional Service	No Simultaneous Gap Out
1	0	0	No	0	No	Inactive	None	None	None	0	Yes	No	No	No	No
2	7	16	No	0	No	Green	None	Min	None	0	No	Yes	No	No	No
4	7	19	No	0	No	Inactive	None	None	None	0	Yes	Yes	No	No	No
6	7	16	No	0	No	Green	None	Min	None	0	No	Yes	No	No	No
8	7	19	No	0	No	Inactive	None	None	None	0	Yes	Yes	No	No	No

Special Sequence
Default Data

Vehical Detector Phase Assignment

	Assigned Phase	Mode	Switched Phase	Extend	Delay
Vehical Detector Channel :17	1	Veh	0	0.0	0

Pedestrian Detector
Default Data

Special Detector Phase Assignment

	Assign Phase	Mode	Switched Phase	Extend	Delay
:					

Default Data

Unit Data

General Control

Startup Time: 6sec Startup State: All Red Red Revert: 2.0sec
Auto Ped Clear: No Stop Time Reset: No Alternate Sequence: 0

ABC connector Input Modes: 0
ABC connector Output Modes: 0
D connector Input Modes: 0
D connector Output Modes: 0

Ring	Input Response	Output Selection
1	Ring 1	Ring 1
2	Ring 2	Ring 2
3	None	None
4	None	None

Remote Flash

Test A = Flash No

Phase	Flash Entry Phase	Flash Exit Phase
2	No	Yes
6	No	Yes

Channel	Flash Color	Flash Alternat

Default Data - No Flash

Overlaps

Overlaps

Phase(s)	A	B	C	D	E	F	G	H	I	J	K	L	M	N	O	P
Green	0	0	0	0	0	0	0	0	0	0	0	0	0	0	0	0
Yellow	4.0	2.0	4.0	4.0	4.0	4.0	4.0	4.0	4.0	4.0	4.0	4.0	4.0	4.0	4.0	4.0
Red	2.0	2.0	2.0	2.0	2.0	2.0	2.0	2.0	2.0	2.0	2.0	2.0	2.0	2.0	2.0	2.0
Stop Grn/Yel Phase	0	0	0	0	0	0	0	0	0	0	0	0	0	0	0	0
Start Green Phase	0	0	0	0	0	0	0	0	0	0	0	0	0	0	0	0

Ring

Phase	Ring	Next Phase
1	1	2
2	1	3
4	1	1
6	2	7
8	2	5

Phase(s)

	1	2	3	4	5	6	7	8	9	10	11	12	13	14	15	16
Concurrent Phases	1	2	3	4	1	1	3	3	9	10	11	12	13	14	15	16
	5	5	7	7	2	2	4	4								
	6	6	8	8	5	6	7	8								

Alternate Sequences

Alternate Sequences

Phase Pair(s)	1	2	3	4	5	6	7	8	9	10	11	12	13	14	15
1	1 2	3 4	1 2	5 6	1 2	3 4	1 2	7 8	1 2	3 4	1 2	5 6	1 2	3 4	1 2
2	0 0	0 0	3 4	0 0	5 6	5 6	3 4	0 0	7 8	7 8	3 4	7 8	5 6	5 6	3 4
3	0 0	0 0	0 0	0 0	0 0	0 0	5 6	0 0	0 0	0 0	7 8	0 0	7 8	7 8	5 6
4	0 0	0 0	0 0	0 0	0 0	0 0	0 0	0 0	0 0	0 0	0 0	0 0	0 0	0 0	7 8

Port 1 Data

BIU Addr	Port Status	Message 40
9	Used	No
18	Used	No

Control	Channel	Hardware Pins	Control	Channel	Hardware Pins
1 - Veh Phase 1	1	1 - Phase 1 RYG	2 - Veh Phase 2	2	2 - Phase 2 RYG
3 - Veh Phase 3	3	3 - Phase 3 RYG	4 - Veh Phase 4	4	4 - Phase 4 RYG
5 - Veh Phase 5	5	5 - Phase 5 RYG	6 - Veh Phase 6	6	6 - Phase 6 RYG
7 - Veh Phase 7	7	7 - Phase 7 RYG	8 - Veh Phase 8	8	8 - Phase 8 RYG
18 - Ped Phase 2	9	10 - Phase 2 DPW	20 - Ped Phase 4	10	12 - Phase 4 DPW
22 - Ped Phase 6	11	14 - Phase 6 DPW	24 - Ped Phase 8	12	16 - Phase 8 DPW
33 - Overlap A	13	17 - Overlap A RYG	34 - Overlap B	14	18 - Overlap B RYG
35 - Overlap C	15	19 - Overlap C RYG	36 - Overlap D	16	20 - Overlap D RYG
17 - Ped Phase 1	17	9 - Phase 1 DPW	19 - Ped Phase 3	18	11 - Phase 3 DPW
21 - Ped Phase 5	19	13 - Phase 5 DPW	23 - Ped Phase 7	20	15 - Phase 7 DPW

Coordination Data

Dial/Split **Cycle**

/

General Coordination Data

Operation Mode: 0=Free
Coordination Mode: 0=Permissive
Maximun Mode: 0=Inhibit
Correction Mode: 2=Short Way

Offset Mode: 0=Beg Grn
Force Mode: 0=Plan
Max Dwell Time: 15
Yield Period: 0

Manual Dial: 1
Manual Split: 1
Manual Offset: 1

Split Times and Phase Modes

Dial / Split

Ph.	Splits	Ph. Mode	Ph.	Splits	Ph. Mode	Ph.	Splits	Ph. Mode	Ph.	Splits	Ph. Mode

Traffic Plan Data

Plan: // Offset Time: Alt. Sequence: Mode: Rg 2 Lag Time: Rg 3 Lag Time: Rg 4 Lag Time:

Local TBC Data

Start of Daylight Saving Month: 3 Week: 2 Cycle Zero Reference Hours: 24 Min: 0

End of Daylight Saving Month: 11 Week: 1

Source Day	Equate Days 1	2	3	4	5	6	7

Traffic Data

PHASE FUNCTION

Event	Day	Time	D/S/O	flash	1	2	3	4	5	6	7	8	9	10	11	12	13	14	15	16
		:	//																	

AUX. Events

Event	Program Day	Hour	Min.	Aux Ouputs 1	2	3	Det. Diag. D1	Det. Rpt. D2	Det. Mult100 D3	Dimming	Special Function Outputs 1	2	3	4	5	6	7	8

Default Data - No Special Day(s) or Week(s) Programmed

Special Functions

Function	SF1	SF2	SF3	SF4	SF5	SF6	SF7	SF8

Phase Function

Phase Function Map	PF1	PF2	PF3	PF4	PF5	PF6	PF7	PF8	PF9	PF10	PF11	PF12	PF13	PF14	PF15	PF16
Phase 1 Max2	X															
Phase 2 Max2		X														
Phase 3 Max2			X													
Phase 4 Max2				X												
Phase 5 Max2					X											
Phase 6 Max2						X										
Phase 7 Max2							X									
Phase 8 Max2								X								

Dimming Data

Channel	Red	Yellow	Green	Alternate

Default Data - No Dimming Programmed

Preemption Data

General Preemption Data

Flash = Preempt 1, Preepmt 1 = Preempt 2, Preepmt 2 = Preempt 3, Preepmt 3 = Preempt 4, Preepmt 4 = Preempt 5, Preepmt 5 = Preempt 6

Ring 1 Min GRN/WLK = 5 Ring 2 Min GRN/WLK = 5 Ring 3 Min GRN/WLK = 5 Ring 4 Min GRN/WLK = 5

Preempt Timers

Preempt	Non-Locking	Link to Preempt	Delay	Extend	Duration	MaxCall	Lock-Out	Select: Ped Clear	Select: Yel	Select: Red	Track: Grn	Track: Ped	Track: Yel	Track: Red	Dwell Green	Return: Ped Clear	Return: Yel	Return: Red
1	Yes	0	1	5	0	0	0	0	0	0	0	0	0	0	10	0	0	0
2	Yes	0	1	5	0	0	0	0	0	0	0	0	0	0	10	0	0	0
3	Yes	0	1	5	0	0	0	0	0	0	0	0	0	0	10	0	0	0
4	Yes	0	1	5	0	0	0	0	0	0	0	0	0	0	10	0	0	0
5	Yes	0	1	5	0	0	0	0	0	0	0	0	0	0	10	0	0	0
6	Yes	0	1	5	0	0	0	0	0	0	0	0	0	0	10	0	0	0

Preempt 1

Phase	Exit Phase	Exit Calls

Preempt 2

Phase	Exit Phase	Exit Calls

Preempt 3

Phase	Exit Phase	Exit Calls

Preempt 4

Phase	Exit Phase	Exit Calls
4	Yes	No
8	Yes	No

Preempt 5

Phase	Exit Phase	Exit Calls

Preempt 6

Phase	Exit Phase	Exit Calls

Priority Timers

Priority	Non-Locking	Delay	Extend	Duration	Dwell	Max_Call	Lock-Out	Skip Phases
1	No	0	0	0	0	0	0	0=Do not Skip Phases
2	No	0	0	0	0	0	0	0=Do not Skip Phases
3	No	0	0	0	0	0	0	0=Do not Skip Phases
4	No	0	0	0	0	0	0	0=Do not Skip Phases
5	No	0	0	0	0	0	0	0=Do not Skip Phases
6	No	0	0	0	0	0	0	0=Do not Skip Phases

Priority 1

Phase	Exit Phase	Exit Calls

Priority 2

Phase	Exit Phase	Exit Calls

Priority 3

Phase	Exit Phase	Exit Calls

Priority 4

Phase	Exit Phase	Exit Calls

Priority 5

Phase	Exit Phase	Exit Calls

Priority 6

Phase	Exit Phase	Exit Calls

Preempt 1

Vehical Phases

Ph.	Track	Dwell	Cycle
1	Red	Red	No
2	Red	Red	No
3	Red	Red	No
4	Red	Red	No
5	Red	Red	No
6	Red	Red	No
7	Red	Red	No
8	Red	Red	No
9	Red	Red	No
10	Red	Red	No
11	Red	Red	No
12	Red	Red	No
13	Red	Red	No
14	Red	Red	No
15	Red	Red	No
16	Red	Red	No

Pedestrian Phases

Ph	Track	Dwell	Cycle
1	Don't Walk	Don't Walk	No
2	Don't Walk	Don't Walk	No
3	Don't Walk	Don't Walk	No
4	Don't Walk	Don't Walk	No
5	Don't Walk	Don't Walk	No
6	Don't Walk	Don't Walk	No
7	Don't Walk	Don't Walk	No
8	Don't Walk	Don't Walk	No
9	Don't Walk	Don't Walk	No
10	Don't Walk	Don't Walk	No
11	Don't Walk	Don't Walk	No
12	Don't Walk	Don't Walk	No
13	Don't Walk	Don't Walk	No
14	Don't Walk	Don't Walk	No
15	Don't Walk	Don't Walk	No
16	Don't Walk	Don't Walk	No

Overlaps

Ovlp	Track	Dwell	Cycle
A	Red	Red	No
B	Red	Red	No
C	Red	Red	No
D	Red	Red	No
E	Red	Red	No
F	Red	Red	No
G	Red	Red	No
H	Red	Red	No
I	Red	Red	No
J	Red	Red	No
K	Red	Red	No
L	Red	Red	No
M	Red	Red	No
N	Red	Red	No
O	Red	Red	No
P	Red	Red	No

Preempt 2

Vehical Phases				Pedestrian Phases				Overlaps			
Ph.	Track	Dwell	Cycle	Ph.	Track	Dwell	Cycle	Ovlp.	Track	Dwell	Cycle
1	Red	Red	No	1	Don't Walk	Don't Walk	No	A	Red	Red	No
2	Red	Red	No	2	Don't Walk	Don't Walk	No	B	Red	Red	No
3	Red	Red	No	3	Don't Walk	Don't Walk	No	C	Red	Red	No
4	Red	Red	No	4	Don't Walk	Don't Walk	No	D	Red	Red	No
5	Red	Red	No	5	Don't Walk	Don't Walk	No	E	Red	Red	No
6	Red	Red	No	6	Don't Walk	Don't Walk	No	F	Red	Red	No
7	Red	Red	No	7	Don't Walk	Don't Walk	No	G	Red	Red	No
8	Red	Red	No	8	Don't Walk	Don't Walk	No	H	Red	Red	No
9	Red	Red	No	9	Don't Walk	Don't Walk	No	I	Red	Red	No
10	Red	Red	No	10	Don't Walk	Don't Walk	No	J	Red	Red	No
11	Red	Red	No	11	Don't Walk	Don't Walk	No	K	Red	Red	No
12	Red	Red	No	12	Don't Walk	Don't Walk	No	L	Red	Red	No
13	Red	Red	No	13	Don't Walk	Don't Walk	No	M	Red	Red	No
14	Red	Red	No	14	Don't Walk	Don't Walk	No	N	Red	Red	No
15	Red	Red	No	15	Don't Walk	Don't Walk	No	O	Red	Red	No
16	Red	Red	No	16	Don't Walk	Don't Walk	No	P	Red	Red	No

Preempt 3

Vehical Phases				Pedestrian Phases				Overlaps			
Ph.	Track	Dwell	Cycle	Ph.	Track	Dwell	Cycle	Ovlp.	Track	Dwell	Cycle
1	Red	Red	No	1	Don't Walk	Don't Walk	No	A	Red	Red	No
2	Red	Red	No	2	Don't Walk	Don't Walk	No	B	Red	Red	No
3	Red	Red	No	3	Don't Walk	Don't Walk	No	C	Red	Red	No
4	Red	Red	No	4	Don't Walk	Don't Walk	No	D	Red	Red	No
5	Red	Red	No	5	Don't Walk	Don't Walk	No	E	Red	Red	No
6	Red	Red	No	6	Don't Walk	Don't Walk	No	F	Red	Red	No
7	Red	Red	No	7	Don't Walk	Don't Walk	No	G	Red	Red	No
8	Red	Red	No	8	Don't Walk	Don't Walk	No	H	Red	Red	No
9	Red	Red	No	9	Don't Walk	Don't Walk	No	I	Red	Red	No
10	Red	Red	No	10	Don't Walk	Don't Walk	No	J	Red	Red	No
11	Red	Red	No	11	Don't Walk	Don't Walk	No	K	Red	Red	No
12	Red	Red	No	12	Don't Walk	Don't Walk	No	L	Red	Red	No
13	Red	Red	No	13	Don't Walk	Don't Walk	No	M	Red	Red	No
14	Red	Red	No	14	Don't Walk	Don't Walk	No	N	Red	Red	No
15	Red	Red	No	15	Don't Walk	Don't Walk	No	O	Red	Red	No
16	Red	Red	No	16	Don't Walk	Don't Walk	No	P	Red	Red	No

Preempt 4

Vehical Phases				Pedestrian Phases				Overlaps			
Ph.	Track	Dwell	Cycle	Ph.	Track	Dwell	Cycle	Ovlp.	Track	Dwell	Cycle
1	Red	Red	No	1	Don't Walk	Don't Walk	No	A	Red	Red	No
2	Red	Red	No	2	Don't Walk	Don't Walk	No	B	Red	Red	No
3	Red	Red	No	3	Don't Walk	Don't Walk	No	C	Red	Red	No
4	Red	Green	No	4	Don't Walk	Don't Walk	No	D	Red	Red	No
5	Red	Red	No	5	Don't Walk	Don't Walk	No	E	Red	Red	No
6	Red	Red	No	6	Don't Walk	Don't Walk	No	F	Red	Red	No
7	Red	Red	No	7	Don't Walk	Don't Walk	No	G	Red	Red	No
8	Red	Green	No	8	Don't Walk	Don't Walk	No	H	Red	Red	No
9	Red	Red	No	9	Don't Walk	Don't Walk	No	I	Red	Red	No
10	Red	Red	No	10	Don't Walk	Don't Walk	No	J	Red	Red	No
11	Red	Red	No	11	Don't Walk	Don't Walk	No	K	Red	Red	No
12	Red	Red	No	12	Don't Walk	Don't Walk	No	L	Red	Red	No
13	Red	Red	No	13	Don't Walk	Don't Walk	No	M	Red	Red	No
14	Red	Red	No	14	Don't Walk	Don't Walk	No	N	Red	Red	No
15	Red	Red	No	15	Don't Walk	Don't Walk	No	O	Red	Red	No
16	Red	Red	No	16	Don't Walk	Don't Walk	No	P	Red	Red	No

Preempt 5

Vehical Phases

Ph.	Track	Dwell	Cycle
1	Red	Red	No
2	Red	Red	No
3	Red	Red	No
4	Red	Red	No
5	Red	Red	No
6	Red	Red	No
7	Red	Red	No
8	Red	Red	No
9	Red	Red	No
10	Red	Red	No
11	Red	Red	No
12	Red	Red	No
13	Red	Red	No
14	Red	Red	No
15	Red	Red	No
16	Red	Red	No

Pedestrian Phases

Ph.	Track	Dwell	Cycle
1	Don't Walk	Don't Walk	No
2	Don't Walk	Don't Walk	No
3	Don't Walk	Don't Walk	No
4	Don't Walk	Don't Walk	No
5	Don't Walk	Don't Walk	No
6	Don't Walk	Don't Walk	No
7	Don't Walk	Don't Walk	No
8	Don't Walk	Don't Walk	No
9	Don't Walk	Don't Walk	No
10	Don't Walk	Don't Walk	No
11	Don't Walk	Don't Walk	No
12	Don't Walk	Don't Walk	No
13	Don't Walk	Don't Walk	No
14	Don't Walk	Don't Walk	No
15	Don't Walk	Don't Walk	No
16	Don't Walk	Don't Walk	No

Overlaps

Ovlp.	Track	Dwell	Cycle
A	Red	Red	No
B	Red	Red	No
C	Red	Red	No
D	Red	Red	No
E	Red	Red	No
F	Red	Red	No
G	Red	Red	No
H	Red	Red	No
I	Red	Red	No
J	Red	Red	No
K	Red	Red	No
L	Red	Red	No
M	Red	Red	No
N	Red	Red	No
O	Red	Red	No
P	Red	Red	No

Preempt 6

Vehical Phases

Ph.	Track	Dwell	Cycle
1	Red	Red	No
2	Red	Red	No
3	Red	Red	No
4	Red	Red	No
5	Red	Red	No
6	Red	Red	No
7	Red	Red	No
8	Red	Red	No
9	Red	Red	No
10	Red	Red	No
11	Red	Red	No
12	Red	Red	No
13	Red	Red	No
14	Red	Red	No
15	Red	Red	No
16	Red	Red	No

Pedestrian Phases

Ph.	Track	Dwell	Cycle
1	Don't Walk	Don't Walk	No
2	Don't Walk	Don't Walk	No
3	Don't Walk	Don't Walk	No
4	Don't Walk	Don't Walk	No
5	Don't Walk	Don't Walk	No
6	Don't Walk	Don't Walk	No
7	Don't Walk	Don't Walk	No
8	Don't Walk	Don't Walk	No
9	Don't Walk	Don't Walk	No
10	Don't Walk	Don't Walk	No
11	Don't Walk	Don't Walk	No
12	Don't Walk	Don't Walk	No
13	Don't Walk	Don't Walk	No
14	Don't Walk	Don't Walk	No
15	Don't Walk	Don't Walk	No
16	Don't Walk	Don't Walk	No

Overlaps

Ovlp.	Track	Dwell	Cycle
A	Red	Red	No
B	Red	Red	No
C	Red	Red	No
D	Red	Red	No
E	Red	Red	No
F	Red	Red	No
G	Red	Red	No
H	Red	Red	No
I	Red	Red	No
J	Red	Red	No
K	Red	Red	No
L	Red	Red	No
M	Red	Red	No
N	Red	Red	No
O	Red	Red	No
P	Red	Red	No

System/Detectors Data

Revert to Backup: 15

1st Phone:

2nd Phone:

Local Critical Alarms

Cycle Failure: No
Local Free: No
Coord Failure: No
Conflict Flash: No
Remote Flash: No

Local Fash: No
Cycle Fault: No
Coord Fault: No
Premption: No
Voltage Monitor: No

Special Status 1: No
Special Status 2: No
Special Status 3: No
Special Status 4: No
Special Status 5: No
Special Status 6: No

Traffic Responsive

System Detector	Detector Channel	Veh/Hr	Average Time(mins)	Occupancy Correction/10	Min Volume %	Queue 1 Detectors	System Detectors	Weight Factor	Queue 2 Detectors	System Detectors	Weight Factor

Default Data

Sample Interval:

Default Data

Queue: 1 Input Selection: 0=Average
Detector Failed Level : 0
Queue: 2 Input Selection: 0=Average
Detector Failed Level : 0

Default Data

Queue:

Level	Enter	Leave	Dial / Split / Offset
			/ /

Default Data

Vehical Detector

Diagnostic Value 0

Detector	Max Presence	No Activity	Erratic Count

Default Data - Diag 0 Values

Vehical Detector

Diagnostic Value 1

Detector	Max Presence	No Activity	Erratic Count

Default Data - No Diag 1 Values

Special Detector

Diagnostic Value 0

Detector	Max Presence	No Activity	Erratic Count

Default Data - No Diag 0 Valu

Pedestrian Detector

Diagnostic Value 0

Detector	Max Presence	No Activity	Erratic Count

Default Data - No Diag 0 Values

Speed Trap Data

Speed Trap:

Measurement:

Detector 1	Detector_2	Distance :

Default Data

Volume Detector Data

Volume Detector Number	Report Interval Controller Detector Channel

Default Data

Pedestrian Detector

Diagnostic Value 1

Detector	Max Presence	No Activity	Erratic Count

Default Data - No Diag 1 Values

Dial/Split/Offset

//

Default Data

Special Detector

Diagnostic Value 1

Detector	Max Presence	No Activity	Erratic Count

Default Data - No Diag 1 Values

Speed Trap Low Treshold	Speed Trap High Treshold

Appendix B: Existing Transportation System with Background Traffic Operations Analysis

Base Year Background - Capacity analysis inputs/outputs
Interim Year Background - Capacity analysis inputs/outputs
Horizon Year Background - Capacity analysis inputs/outputs

HCM 6th Signalized Intersection Summary
1: Jackson Dr & WIS-60

05/19/2020

Movement	EBL	EBT	EBR	WBL	WBT	WBR	NBL	NBT	NBR	SBL	SBT	SBR
Lane Configurations												
Traffic Volume (veh/h)	70	330	30	10	335	20	110	50	20	45	25	180
Future Volume (veh/h)	70	330	30	10	335	20	110	50	20	45	25	180
Initial Q (Qb), veh	0	0	0	0	0	0	0	0	0	0	0	0
Ped-Bike Adj(A_pbT)	1.00		1.00	1.00		1.00	1.00		0.97	1.00		0.99
Parking Bus, Adj	1.00	1.00	1.00	1.00	1.00	1.00	1.00	1.00	1.00	1.00	1.00	1.00
Work Zone On Approach		No			No			No			No	
Adj Sat Flow, veh/h/ln	1752	1554	1554	1767	1767	1767	1826	1619	1619	1856	1646	1646
Adj Flow Rate, veh/h	73	344	31	10	349	21	115	52	21	47	26	188
Peak Hour Factor	0.96	0.96	0.96	0.96	0.96	0.96	0.96	0.96	0.96	0.96	0.96	0.96
Percent Heavy Veh, %	10	10	10	9	9	9	5	5	5	3	3	3
Cap, veh/h	509	724	65	70	495	29	294	300	121	441	47	342
Arrive On Green	0.10	0.52	0.52	0.30	0.30	0.30	0.28	0.28	0.28	0.28	0.28	0.28
Sat Flow, veh/h	1668	1404	127	16	1623	96	1136	1087	439	1310	172	1242
Grp Volume(v), veh/h	73	0	375	380	0	0	115	0	73	47	0	214
Grp Sat Flow(s),veh/h/ln	1668	0	1530	1735	0	0	1136	0	1525	1310	0	1414
Q Serve(g_s), s	1.5	0.0	8.9	0.0	0.0	0.0	5.4	0.0	2.1	1.6	0.0	7.3
Cycle Q Clear(g_c), s	1.5	0.0	8.9	10.9	0.0	0.0	12.8	0.0	2.1	3.7	0.0	7.3
Prop In Lane	1.00		0.08	0.03		0.06	1.00		0.29	1.00		0.88
Lane Grp Cap(c), veh/h	509	0	790	594	0	0	294	0	421	441	0	390
V/C Ratio(X)	0.14	0.00	0.47	0.64	0.00	0.00	0.39	0.00	0.17	0.11	0.00	0.55
Avail Cap(c_a), veh/h	1084	0	2067	1432	0	0	682	0	943	889	0	874
HCM Platoon Ratio	1.00	1.00	1.00	1.00	1.00	1.00	1.00	1.00	1.00	1.00	1.00	1.00
Upstream Filter(I)	1.00	0.00	1.00	1.00	0.00	0.00	1.00	0.00	1.00	1.00	0.00	1.00
Uniform Delay (d), s/veh	9.4	0.0	8.8	17.5	0.0	0.0	22.9	0.0	15.6	17.0	0.0	17.5
Incr Delay (d2), s/veh	0.0	0.0	0.7	1.7	0.0	0.0	0.3	0.0	0.1	0.0	0.0	0.4
Initial Q Delay(d3),s/veh	0.0	0.0	0.0	0.0	0.0	0.0	0.0	0.0	0.0	0.0	0.0	0.0
%ile BackOfQ(95%),veh/ln	0.9	0.0	4.7	7.7	0.0	0.0	2.5	0.0	1.2	0.8	0.0	4.1
Unsig. Movement Delay, s/veh												
LnGrp Delay(d),s/veh	9.5	0.0	9.4	19.2	0.0	0.0	23.3	0.0	15.7	17.0	0.0	18.0
LnGrp LOS	A	A	A	B	A	A	C	A	B	B	A	B
Approach Vol, veh/h		448			380			188			261	
Approach Delay, s/veh		9.4			19.2			20.3			17.8	
Approach LOS		A			B			C			B	

Timer - Assigned Phs	1	2		4		6		8
Phs Duration (G+Y+Rc), s	12.0	22.6		22.1		34.5		22.1
Change Period (Y+Rc), s	6.5	* 5.3		6.5		* 5.3		6.5
Max Green Setting (Gmax), s	25.0	* 45		35.0		* 77		35.0
Max Q Clear Time (g_c+I1), s	3.5	12.9		14.8		10.9		9.3
Green Ext Time (p_c), s	0.1	4.0		0.4		4.3		0.8

Intersection Summary	
HCM 6th Ctrl Delay	15.7
HCM 6th LOS	B

Notes

* HCM 6th computational engine requires equal clearance times for the phases crossing the barrier.

Intersection	
Int Delay, s/veh	0.2

Movement	EBL	EBT	WBT	WBR	SBL	SBR
Lane Configurations		↑	↑		⋔	
Traffic Vol, veh/h	10	385	365	5	5	0
Future Vol, veh/h	10	385	365	5	5	0
Conflicting Peds, #/hr	0	0	0	0	0	0
Sign Control	Free	Free	Free	Free	Stop	Stop
RT Channelized	-	None	-	None	-	None
Storage Length	-	-	-	-	0	-
Veh in Median Storage, #	-	0	0	-	0	-
Grade, %	-	0	0	-	0	-
Peak Hour Factor	92	92	92	92	92	92
Heavy Vehicles, %	4	4	9	9	2	2
Mvmt Flow	11	418	397	5	5	0

Major/Minor	Major1		Major2		Minor2	
Conflicting Flow All	402	0	-	0	840	400
Stage 1	-	-	-	-	400	-
Stage 2	-	-	-	-	440	-
Critical Hdwy	4.14	-	-	-	6.42	6.22
Critical Hdwy Stg 1	-	-	-	-	5.42	-
Critical Hdwy Stg 2	-	-	-	-	5.42	-
Follow-up Hdwy	2.236	-	-	-	3.518	3.318
Pot Cap-1 Maneuver	1146	-	-	-	335	650
Stage 1	-	-	-	-	677	-
Stage 2	-	-	-	-	649	-
Platoon blocked, %		-	-	-		
Mov Cap-1 Maneuver	1146	-	-	-	331	650
Mov Cap-2 Maneuver	-	-	-	-	331	-
Stage 1	-	-	-	-	668	-
Stage 2	-	-	-	-	649	-

Approach	EB	WB	SB
HCM Control Delay, s	0.2	0	16.1
HCM LOS			C

Minor Lane/Major Mvmt	EBL	EBT	WBT	WBR	SBLn1
Capacity (veh/h)	1146	-	-	-	331
HCM Lane V/C Ratio	0.009	-	-	-	0.016
HCM Control Delay (s)	8.2	-	-	-	16.1
HCM Lane LOS	A	-	-	-	C
HCM 95th %tile Q(veh)	0	-	-	-	0.1

Intersection	
Int Delay, s/veh	2.9

Movement	EBL	EBT	WBT	WBR	SBL	SBR
Lane Configurations						
Traffic Vol, veh/h	10	380	310	15	70	60
Future Vol, veh/h	10	380	310	15	70	60
Conflicting Peds, #/hr	0	0	0	0	0	0
Sign Control	Free	Free	Free	Free	Stop	Stop
RT Channelized	-	None	-	None	-	None
Storage Length	-	-	-	-	0	-
Veh in Median Storage, #	-	0	0	-	0	-
Grade, %	-	0	0	-	0	-
Peak Hour Factor	84	84	84	84	84	84
Heavy Vehicles, %	4	4	6	6	1	1
Mvmt Flow	12	452	369	18	83	71

Major/Minor	Major1		Major2		Minor2	
Conflicting Flow All	387	0	-	0	854	378
Stage 1	-	-	-	-	378	-
Stage 2	-	-	-	-	476	-
Critical Hdwy	4.14	-	-	-	6.41	6.21
Critical Hdwy Stg 1	-	-	-	-	5.41	-
Critical Hdwy Stg 2	-	-	-	-	5.41	-
Follow-up Hdwy	2.236	-	-	-	3.509	3.309
Pot Cap-1 Maneuver	1161	-	-	-	330	671
Stage 1	-	-	-	-	695	-
Stage 2	-	-	-	-	627	-
Platoon blocked, %		-	-	-		
Mov Cap-1 Maneuver	1161	-	-	-	325	671
Mov Cap-2 Maneuver	-	-	-	-	325	-
Stage 1	-	-	-	-	685	-
Stage 2	-	-	-	-	627	-

Approach	EB	WB	SB
HCM Control Delay, s	0.2	0	18.1
HCM LOS			C

Minor Lane/Major Mvmt	EBL	EBT	WBT	WBR	SBLn1
Capacity (veh/h)	1161	-	-	-	427
HCM Lane V/C Ratio	0.01	-	-	-	0.362
HCM Control Delay (s)	8.1	0	-	-	18.1
HCM Lane LOS	A	A	-	-	C
HCM 95th %tile Q(veh)	0	-	-	-	1.6

Intersection	
Int Delay, s/veh	0

Movement	EBL	EBT	WBT	WBR	SBL	SBR
Lane Configurations		↑	↑		⋔	
Traffic Vol, veh/h	0	450	325	0	0	0
Future Vol, veh/h	0	450	325	0	0	0
Conflicting Peds, #/hr	0	0	0	0	0	0
Sign Control	Free	Free	Free	Free	Stop	Stop
RT Channelized	-	None	-	None	-	None
Storage Length	-	-	-	-	0	-
Veh in Median Storage, #	-	0	0	-	0	-
Grade, %	-	0	0	-	0	-
Peak Hour Factor	92	92	92	92	92	92
Heavy Vehicles, %	6	6	6	6	2	2
Mvmt Flow	0	489	353	0	0	0

Major/Minor	Major1		Major2		Minor2	
Conflicting Flow All	-	0	-	0	842	353
Stage 1	-	-	-	-	353	-
Stage 2	-	-	-	-	489	-
Critical Hdwy	-	-	-	-	6.42	6.22
Critical Hdwy Stg 1	-	-	-	-	5.42	-
Critical Hdwy Stg 2	-	-	-	-	5.42	-
Follow-up Hdwy	-	-	-	-	3.518	3.318
Pot Cap-1 Maneuver	0	-	-	0	334	691
Stage 1	0	-	-	0	711	-
Stage 2	0	-	-	0	616	-
Platoon blocked, %		-	-			
Mov Cap-1 Maneuver	-	-	-	-	334	691
Mov Cap-2 Maneuver	-	-	-	-	334	-
Stage 1	-	-	-	-	711	-
Stage 2	-	-	-	-	616	-

Approach	EB	WB	SB
HCM Control Delay, s	0	0	0
HCM LOS			A

Minor Lane/Major Mvmt	EBT	WBT	SBLn1
Capacity (veh/h)	-	-	-
HCM Lane V/C Ratio	-	-	-
HCM Control Delay (s)	-	-	0
HCM Lane LOS	-	-	A
HCM 95th %tile Q(veh)	-	-	-

Intersection	
Int Delay, s/veh	0

Movement	EBT	EBR	WBL	WBT	NBL	NBR
Lane Configurations	↑			↑	⋔	
Traffic Vol, veh/h	450	0	0	325	0	0
Future Vol, veh/h	450	0	0	325	0	0
Conflicting Peds, #/hr	0	0	0	0	0	0
Sign Control	Free	Free	Free	Free	Stop	Stop
RT Channelized	-	None	-	None	-	None
Storage Length	-	-	-	-	0	-
Veh in Median Storage, #	0	-	-	0	0	-
Grade, %	0	-	-	0	0	-
Peak Hour Factor	92	92	92	92	92	92
Heavy Vehicles, %	6	6	6	6	2	2
Mvmt Flow	489	0	0	353	0	0

Major/Minor	Major1		Major2		Minor1	
Conflicting Flow All	0	-	-	-	842	489
Stage 1	-	-	-	-	489	-
Stage 2	-	-	-	-	353	-
Critical Hdwy	-	-	-	-	6.42	6.22
Critical Hdwy Stg 1	-	-	-	-	5.42	-
Critical Hdwy Stg 2	-	-	-	-	5.42	-
Follow-up Hdwy	-	-	-	-	3.518	3.318
Pot Cap-1 Maneuver	-	0	0	-	334	579
Stage 1	-	0	0	-	616	-
Stage 2	-	0	0	-	711	-
Platoon blocked, %	-			-		
Mov Cap-1 Maneuver	-	-	-	-	334	579
Mov Cap-2 Maneuver	-	-	-	-	334	-
Stage 1	-	-	-	-	616	-
Stage 2	-	-	-	-	711	-

Approach	EB	WB	NB
HCM Control Delay, s	0	0	0
HCM LOS			A

Minor Lane/Major Mvmt	NBLn1	EBT	WBT
Capacity (veh/h)	-	-	-
HCM Lane V/C Ratio	-	-	-
HCM Control Delay (s)	0	-	-
HCM Lane LOS	A	-	-
HCM 95th %tile Q(veh)	-	-	-

Intersection	
Int Delay, s/veh	6.8

Movement	EBL	EBT	EBR	WBL	WBT	WBR	NBL	NBT	NBR	SBL	SBT	SBR
Lane Configurations												
Traffic Vol, veh/h	70	345	35	15	235	85	25	20	25	80	15	65
Future Vol, veh/h	70	345	35	15	235	85	25	20	25	80	15	65
Conflicting Peds, #/hr	0	0	1	1	0	0	0	0	0	0	0	0
Sign Control	Free	Free	Free	Free	Free	Free	Stop	Stop	Stop	Stop	Stop	Stop
RT Channelized	-	-	None	-	-	None	-	-	None	-	-	None
Storage Length	175	-	-	150	-	125	-	-	-	100	-	-
Veh in Median Storage, #	-	0	-	-	0	-	-	0	-	-	0	-
Grade, %	-	0	-	-	0	-	-	0	-	-	0	-
Peak Hour Factor	84	84	84	84	84	84	84	84	84	84	84	84
Heavy Vehicles, %	6	6	6	4	4	4	7	7	7	6	6	6
Mvmt Flow	83	411	42	18	280	101	30	24	30	95	18	77

Major/Minor	Major1			Major2			Minor1			Minor2		
Conflicting Flow All	381	0	0	454	0	0	1013	1016	433	941	936	280
Stage 1	-	-	-	-	-	-	599	599	-	316	316	-
Stage 2	-	-	-	-	-	-	414	417	-	625	620	-
Critical Hdwy	4.16	-	-	4.14	-	-	7.17	6.57	6.27	7.16	6.56	6.26
Critical Hdwy Stg 1	-	-	-	-	-	-	6.17	5.57	-	6.16	5.56	-
Critical Hdwy Stg 2	-	-	-	-	-	-	6.17	5.57	-	6.16	5.56	-
Follow-up Hdwy	2.254	-	-	2.236	-	-	3.563	4.063	3.363	3.554	4.054	3.354
Pot Cap-1 Maneuver	1156	-	-	1096	-	-	213	233	612	239	261	749
Stage 1	-	-	-	-	-	-	480	483	-	687	648	-
Stage 2	-	-	-	-	-	-	606	583	-	466	474	-
Platoon blocked, %		-	-		-	-						
Mov Cap-1 Maneuver	1156	-	-	1095	-	-	168	212	611	194	238	749
Mov Cap-2 Maneuver	-	-	-	-	-	-	168	212	-	194	238	-
Stage 1	-	-	-	-	-	-	445	448	-	638	638	-
Stage 2	-	-	-	-	-	-	520	574	-	390	439	-

Approach	EB	WB	NB	SB
HCM Control Delay, s	1.3	0.4	27	26.7
HCM LOS			D	D

Minor Lane/Major Mvmt	NBLn1	EBL	EBT	EBR	WBL	WBT	WBR	SBLn1	SBLn2
Capacity (veh/h)	246	1156	-	-	1095	-	-	194	534
HCM Lane V/C Ratio	0.339	0.072	-	-	0.016	-	-	0.491	0.178
HCM Control Delay (s)	27	8.4	-	-	8.3	-	-	40.2	13.2
HCM Lane LOS	D	A	-	-	A	-	-	E	B
HCM 95th %tile Q(veh)	1.4	0.2	-	-	0.1	-	-	2.4	0.6

HCM 6th Signalized Intersection Summary
1: Jackson Dr & WIS-60

05/19/2020

Movement	EBL	EBT	EBR	WBL	WBT	WBR	NBL	NBT	NBR	SBL	SBT	SBR
Lane Configurations												
Traffic Volume (veh/h)	175	400	120	15	320	50	70	75	15	40	60	105
Future Volume (veh/h)	175	400	120	15	320	50	70	75	15	40	60	105
Initial Q (Qb), veh	0	0	0	0	0	0	0	0	0	0	0	0
Ped-Bike Adj(A_pbT)	1.00		0.98	1.00		0.98	0.99		0.99	0.99		0.97
Parking Bus, Adj	1.00	1.00	1.00	1.00	1.00	1.00	1.00	1.00	1.00	1.00	1.00	1.00
Work Zone On Approach		No			No			No			No	
Adj Sat Flow, veh/h/ln	1856	1646	1646	1841	1841	1841	1856	1646	1646	1885	1672	1672
Adj Flow Rate, veh/h	188	430	129	16	344	54	75	81	16	43	65	113
Peak Hour Factor	0.93	0.93	0.93	0.93	0.93	0.93	0.93	0.93	0.93	0.93	0.93	0.93
Percent Heavy Veh, %	3	3	3	4	4	4	3	3	3	1	1	1
Cap, veh/h	601	688	206	75	483	74	265	297	59	351	120	208
Arrive On Green	0.13	0.57	0.57	0.32	0.32	0.32	0.22	0.22	0.22	0.22	0.22	0.22
Sat Flow, veh/h	1767	1208	363	27	1503	230	1190	1332	263	1300	537	933
Grp Volume(v), veh/h	188	0	559	414	0	0	75	0	97	43	0	178
Grp Sat Flow(s),veh/h/ln	1767	0	1571	1760	0	0	1190	0	1595	1300	0	1469
Q Serve(g_s), s	3.4	0.0	13.5	0.9	0.0	0.0	3.4	0.0	2.9	1.6	0.0	6.1
Cycle Q Clear(g_c), s	3.4	0.0	13.5	11.6	0.0	0.0	9.5	0.0	2.9	4.5	0.0	6.1
Prop In Lane	1.00		0.23	0.04		0.13	1.00		0.16	1.00		0.63
Lane Grp Cap(c), veh/h	601	0	894	631	0	0	265	0	356	351	0	328
V/C Ratio(X)	0.31	0.00	0.63	0.66	0.00	0.00	0.28	0.00	0.27	0.12	0.00	0.54
Avail Cap(c_a), veh/h	1142	0	2115	1438	0	0	733	0	983	862	0	905
HCM Platoon Ratio	1.00	1.00	1.00	1.00	1.00	1.00	1.00	1.00	1.00	1.00	1.00	1.00
Upstream Filter(I)	1.00	0.00	1.00	1.00	0.00	0.00	1.00	0.00	1.00	1.00	0.00	1.00
Uniform Delay (d), s/veh	8.3	0.0	8.2	17.0	0.0	0.0	23.7	0.0	18.3	20.1	0.0	19.5
Incr Delay (d2), s/veh	0.1	0.0	1.1	1.7	0.0	0.0	0.2	0.0	0.2	0.1	0.0	0.5
Initial Q Delay(d3),s/veh	0.0	0.0	0.0	0.0	0.0	0.0	0.0	0.0	0.0	0.0	0.0	0.0
%ile BackOfQ(95%),veh/ln	2.1	0.0	6.9	8.2	0.0	0.0	1.7	0.0	1.8	0.8	0.0	3.6
Unsig. Movement Delay, s/veh												
LnGrp Delay(d),s/veh	8.4	0.0	9.2	18.7	0.0	0.0	23.9	0.0	18.4	20.2	0.0	20.0
LnGrp LOS	A	A	A	B	A	A	C	A	B	C	A	C
Approach Vol, veh/h		747			414			172			221	
Approach Delay, s/veh		9.0			18.7			20.8			20.1	
Approach LOS		A			B			C			C	

Timer - Assigned Phs	1	2		4		6		8
Phs Duration (G+Y+Rc), s	14.1	23.6		19.2		37.6		19.2
Change Period (Y+Rc), s	6.5	* 5.3		6.5		* 5.3		6.5
Max Green Setting (Gmax), s	25.0	* 45		35.0		* 77		35.0
Max Q Clear Time (g_c+I1), s	5.4	13.6		11.5		15.5		8.1
Green Ext Time (p_c), s	0.2	4.5		0.4		7.4		0.6

Intersection Summary	
HCM 6th Ctrl Delay	14.5
HCM 6th LOS	B

Notes

* HCM 6th computational engine requires equal clearance times for the phases crossing the barrier.

Intersection	
Int Delay, s/veh	0.3

Movement	EBL	EBT	WBT	WBR	SBL	SBR
Lane Configurations		↑	↑		↱	
Traffic Vol, veh/h	5	450	380	0	10	5
Future Vol, veh/h	5	450	380	0	10	5
Conflicting Peds, #/hr	0	0	0	0	0	0
Sign Control	Free	Free	Free	Free	Stop	Stop
RT Channelized	-	None	-	None	-	None
Storage Length	-	-	-	-	0	-
Veh in Median Storage, #	-	0	0	-	0	-
Grade, %	-	0	0	-	0	-
Peak Hour Factor	92	92	92	92	92	92
Heavy Vehicles, %	3	3	4	4	2	2
Mvmt Flow	5	489	413	0	11	5

Major/Minor	Major1		Major2		Minor2	
Conflicting Flow All	413	0	-	0	912	413
Stage 1	-	-	-	-	413	-
Stage 2	-	-	-	-	499	-
Critical Hdwy	4.13	-	-	-	6.42	6.22
Critical Hdwy Stg 1	-	-	-	-	5.42	-
Critical Hdwy Stg 2	-	-	-	-	5.42	-
Follow-up Hdwy	2.227	-	-	-	3.518	3.318
Pot Cap-1 Maneuver	1141	-	-	0	304	639
Stage 1	-	-	-	0	668	-
Stage 2	-	-	-	0	610	-
Platoon blocked, %		-	-			
Mov Cap-1 Maneuver	1141	-	-	-	302	639
Mov Cap-2 Maneuver	-	-	-	-	302	-
Stage 1	-	-	-	-	664	-
Stage 2	-	-	-	-	610	-

Approach	EB	WB	SB
HCM Control Delay, s	0.1	0	15.3
HCM LOS			C

Minor Lane/Major Mvmt	EBL	EBT	WBT	SBLn1
Capacity (veh/h)	1141	-	-	366
HCM Lane V/C Ratio	0.005	-	-	0.045
HCM Control Delay (s)	8.2	-	-	15.3
HCM Lane LOS	A	-	-	C
HCM 95th %tile Q(veh)	0	-	-	0.1

Intersection	
Int Delay, s/veh	1.1

Movement	EBL	EBT	WBT	WBR	SBL	SBR
Lane Configurations						
Traffic Vol, veh/h	50	410	370	45	20	10
Future Vol, veh/h	50	410	370	45	20	10
Conflicting Peds, #/hr	1	0	0	1	0	0
Sign Control	Free	Free	Free	Free	Stop	Stop
RT Channelized	-	None	-	None	-	None
Storage Length	-	-	-	-	0	-
Veh in Median Storage, #	-	0	0	-	0	-
Grade, %	-	0	0	-	0	-
Peak Hour Factor	87	87	87	87	87	87
Heavy Vehicles, %	3	3	4	4	1	1
Mvmt Flow	57	471	425	52	23	11

Major/Minor	Major1		Major2		Minor2	
Conflicting Flow All	478	0	-	0	1037	452
Stage 1	-	-	-	-	452	-
Stage 2	-	-	-	-	585	-
Critical Hdwy	4.13	-	-	-	6.41	6.21
Critical Hdwy Stg 1	-	-	-	-	5.41	-
Critical Hdwy Stg 2	-	-	-	-	5.41	-
Follow-up Hdwy	2.227	-	-	-	3.509	3.309
Pot Cap-1 Maneuver	1079	-	-	-	257	610
Stage 1	-	-	-	-	643	-
Stage 2	-	-	-	-	559	-
Platoon blocked, %		-	-	-		
Mov Cap-1 Maneuver	1078	-	-	-	238	609
Mov Cap-2 Maneuver	-	-	-	-	238	-
Stage 1	-	-	-	-	596	-
Stage 2	-	-	-	-	558	-

Approach	EB	WB	SB
HCM Control Delay, s	0.9	0	18.6
HCM LOS			C

Minor Lane/Major Mvmt	EBL	EBT	WBT	WBR	SBLn1
Capacity (veh/h)	1078	-	-	-	299
HCM Lane V/C Ratio	0.053	-	-	-	0.115
HCM Control Delay (s)	8.5	0	-	-	18.6
HCM Lane LOS	A	A	-	-	C
HCM 95th %tile Q(veh)	0.2	-	-	-	0.4

Intersection	
Int Delay, s/veh	0

Movement	EBL	EBT	WBT	WBR	SBL	SBR
Lane Configurations		↑	↑		⋔	
Traffic Vol, veh/h	0	430	415	0	0	0
Future Vol, veh/h	0	430	415	0	0	0
Conflicting Peds, #/hr	0	0	0	0	0	0
Sign Control	Free	Free	Free	Free	Stop	Stop
RT Channelized	-	None	-	None	-	None
Storage Length	-	-	-	-	0	-
Veh in Median Storage, #	-	0	0	-	0	-
Grade, %	-	0	0	-	0	-
Peak Hour Factor	92	92	92	92	92	92
Heavy Vehicles, %	2	2	4	4	2	2
Mvmt Flow	0	467	451	0	0	0

Major/Minor	Major1		Major2		Minor2	
Conflicting Flow All	-	0	-	0	918	451
Stage 1	-	-	-	-	451	-
Stage 2	-	-	-	-	467	-
Critical Hdwy	-	-	-	-	6.42	6.22
Critical Hdwy Stg 1	-	-	-	-	5.42	-
Critical Hdwy Stg 2	-	-	-	-	5.42	-
Follow-up Hdwy	-	-	-	-	3.518	3.318
Pot Cap-1 Maneuver	0	-	-	0	302	608
Stage 1	0	-	-	0	642	-
Stage 2	0	-	-	0	631	-
Platoon blocked, %		-	-			
Mov Cap-1 Maneuver	-	-	-	-	302	608
Mov Cap-2 Maneuver	-	-	-	-	302	-
Stage 1	-	-	-	-	642	-
Stage 2	-	-	-	-	631	-

Approach	EB	WB	SB
HCM Control Delay, s	0	0	0
HCM LOS			A

Minor Lane/Major Mvmt	EBT	WBT	SBLn1
Capacity (veh/h)	-	-	-
HCM Lane V/C Ratio	-	-	-
HCM Control Delay (s)	-	-	0
HCM Lane LOS	-	-	A
HCM 95th %tile Q(veh)	-	-	-

Intersection	
Int Delay, s/veh	0

Movement	EBT	EBR	WBL	WBT	NBL	NBR
Lane Configurations	↑			↑	⋔	
Traffic Vol, veh/h	430	0	0	415	0	0
Future Vol, veh/h	430	0	0	415	0	0
Conflicting Peds, #/hr	0	0	0	0	0	0
Sign Control	Free	Free	Free	Free	Stop	Stop
RT Channelized	-	None	-	None	-	None
Storage Length	-	-	-	-	0	-
Veh in Median Storage, #	0	-	-	0	0	-
Grade, %	0	-	-	0	0	-
Peak Hour Factor	92	92	92	92	92	92
Heavy Vehicles, %	2	2	4	4	2	2
Mvmt Flow	467	0	0	451	0	0

Major/Minor	Major1		Major2		Minor1	
Conflicting Flow All	0	-	-	-	918	467
Stage 1	-	-	-	-	467	-
Stage 2	-	-	-	-	451	-
Critical Hdwy	-	-	-	-	6.42	6.22
Critical Hdwy Stg 1	-	-	-	-	5.42	-
Critical Hdwy Stg 2	-	-	-	-	5.42	-
Follow-up Hdwy	-	-	-	-	3.518	3.318
Pot Cap-1 Maneuver	-	0	0	-	302	596
Stage 1	-	0	0	-	631	-
Stage 2	-	0	0	-	642	-
Platoon blocked, %	-			-		
Mov Cap-1 Maneuver	-	-	-	-	302	596
Mov Cap-2 Maneuver	-	-	-	-	302	-
Stage 1	-	-	-	-	631	-
Stage 2	-	-	-	-	642	-

Approach	EB	WB	NB
HCM Control Delay, s	0	0	0
HCM LOS			A

Minor Lane/Major Mvmt	NBLn1	EBT	WBT
Capacity (veh/h)	-	-	-
HCM Lane V/C Ratio	-	-	-
HCM Control Delay (s)	0	-	-
HCM Lane LOS	A	-	-
HCM 95th %tile Q(veh)	-	-	-

Intersection	
Int Delay, s/veh	11.2

Movement	EBL	EBT	EBR	WBL	WBT	WBR	NBL	NBT	NBR	SBL	SBT	SBR
Lane Configurations												
Traffic Vol, veh/h	55	275	100	35	310	80	50	40	20	55	35	55
Future Vol, veh/h	55	275	100	35	310	80	50	40	20	55	35	55
Conflicting Peds, #/hr	0	0	0	0	0	0	0	0	0	0	0	0
Sign Control	Free	Free	Free	Free	Free	Free	Stop	Stop	Stop	Stop	Stop	Stop
RT Channelized	-	-	None	-	-	None	-	-	None	-	-	None
Storage Length	175	-	-	150	-	125	-	-	-	100	-	-
Veh in Median Storage, #	-	0	-	-	0	-	-	0	-	-	0	-
Grade, %	-	0	-	-	0	-	-	0	-	-	0	-
Peak Hour Factor	82	82	82	82	82	82	82	82	82	82	82	82
Heavy Vehicles, %	2	2	2	2	2	2	1	1	1	1	1	1
Mvmt Flow	67	335	122	43	378	98	61	49	24	67	43	67

Major/Minor	Major1			Major2			Minor1			Minor2		
Conflicting Flow All	476	0	0	457	0	0	1098	1092	396	1031	1055	378
Stage 1	-	-	-	-	-	-	530	530	-	464	464	-
Stage 2	-	-	-	-	-	-	568	562	-	567	591	-
Critical Hdwy	4.12	-	-	4.12	-	-	7.11	6.51	6.21	7.11	6.51	6.21
Critical Hdwy Stg 1	-	-	-	-	-	-	6.11	5.51	-	6.11	5.51	-
Critical Hdwy Stg 2	-	-	-	-	-	-	6.11	5.51	-	6.11	5.51	-
Follow-up Hdwy	2.218	-	-	2.218	-	-	3.509	4.009	3.309	3.509	4.009	3.309
Pot Cap-1 Maneuver	1086	-	-	1104	-	-	191	215	656	212	227	671
Stage 1	-	-	-	-	-	-	534	528	-	580	565	-
Stage 2	-	-	-	-	-	-	509	511	-	510	496	-
Platoon blocked, %		-	-		-	-						
Mov Cap-1 Maneuver	1086	-	-	1104	-	-	134	194	656	153	205	671
Mov Cap-2 Maneuver	-	-	-	-	-	-	134	194	-	153	205	-
Stage 1	-	-	-	-	-	-	501	495	-	544	543	-
Stage 2	-	-	-	-	-	-	406	491	-	415	465	-

Approach	EB	WB	NB	SB
HCM Control Delay, s	1.1	0.7	67.6	29.5
HCM LOS			F	D

Minor Lane/Major Mvmt	NBLn1	EBL	EBT	EBR	WBL	WBT	WBR	SBLn1	SBLn2
Capacity (veh/h)	180	1086	-	-	1104	-	-	153	356
HCM Lane V/C Ratio	0.745	0.062	-	-	0.039	-	-	0.438	0.308
HCM Control Delay (s)	67.6	8.5	-	-	8.4	-	-	45.7	19.6
HCM Lane LOS	F	A	-	-	A	-	-	E	C
HCM 95th %tile Q(veh)	4.8	0.2	-	-	0.1	-	-	2	1.3

HCM 6th Signalized Intersection Summary
1: Jackson Dr & WIS-60

05/19/2020

Movement	EBL	EBT	EBR	WBL	WBT	WBR	NBL	NBT	NBR	SBL	SBT	SBR
Lane Configurations												
Traffic Volume (veh/h)	65	315	80	15	345	35	90	40	15	25	30	80
Future Volume (veh/h)	65	315	80	15	345	35	90	40	15	25	30	80
Initial Q (Qb), veh	0	0	0	0	0	0	0	0	0	0	0	0
Ped-Bike Adj(A_pbT)	1.00		1.00	1.00		1.00	1.00		1.00	1.00		1.00
Parking Bus, Adj	1.00	1.00	1.00	1.00	1.00	1.00	1.00	1.00	1.00	1.00	1.00	1.00
Work Zone On Approach		No			No			No			No	
Adj Sat Flow, veh/h/ln	1870	1659	1659	1870	1870	1870	1885	1672	1672	1870	1659	1659
Adj Flow Rate, veh/h	66	321	82	15	352	36	92	41	15	26	31	82
Peak Hour Factor	0.98	0.98	0.98	0.98	0.98	0.98	0.98	0.98	0.98	0.98	0.98	0.98
Percent Heavy Veh, %	2	2	2	2	2	2	1	1	1	2	2	2
Cap, veh/h	601	709	181	85	531	53	321	235	86	380	81	214
Arrive On Green	0.10	0.56	0.56	0.33	0.33	0.33	0.20	0.20	0.20	0.20	0.20	0.20
Sat Flow, veh/h	1781	1274	325	26	1628	162	1290	1168	427	1348	402	1065
Grp Volume(v), veh/h	66	0	403	403	0	0	92	0	56	26	0	113
Grp Sat Flow(s),veh/h/ln	1781	0	1599	1816	0	0	1290	0	1595	1348	0	1467
Q Serve(g_s), s	1.0	0.0	7.3	0.0	0.0	0.0	3.2	0.0	1.4	0.8	0.0	3.2
Cycle Q Clear(g_c), s	1.0	0.0	7.3	9.2	0.0	0.0	6.5	0.0	1.4	2.2	0.0	3.2
Prop In Lane	1.00		0.20	0.04		0.09	1.00		0.27	1.00		0.73
Lane Grp Cap(c), veh/h	601	0	890	669	0	0	321	0	321	380	0	295
V/C Ratio(X)	0.11	0.00	0.45	0.60	0.00	0.00	0.29	0.00	0.17	0.07	0.00	0.38
Avail Cap(c_a), veh/h	1342	0	2511	1733	0	0	988	0	1146	1077	0	1054
HCM Platoon Ratio	1.00	1.00	1.00	1.00	1.00	1.00	1.00	1.00	1.00	1.00	1.00	1.00
Upstream Filter(I)	1.00	0.00	1.00	1.00	0.00	0.00	1.00	0.00	1.00	1.00	0.00	1.00
Uniform Delay (d), s/veh	7.3	0.0	6.4	14.2	0.0	0.0	19.7	0.0	16.1	17.0	0.0	16.8
Incr Delay (d2), s/veh	0.0	0.0	0.5	1.3	0.0	0.0	0.2	0.0	0.1	0.0	0.0	0.3
Initial Q Delay(d3),s/veh	0.0	0.0	0.0	0.0	0.0	0.0	0.0	0.0	0.0	0.0	0.0	0.0
%ile BackOfQ(95%),veh/ln	0.6	0.0	3.5	6.4	0.0	0.0	1.6	0.0	0.9	0.4	0.0	1.8
Unsig. Movement Delay, s/veh												
LnGrp Delay(d),s/veh	7.3	0.0	6.9	15.4	0.0	0.0	19.8	0.0	16.2	17.1	0.0	17.2
LnGrp LOS	A	A	A	B	A	A	B	A	B	B	A	B
Approach Vol, veh/h		469			403			148			139	
Approach Delay, s/veh		7.0			15.4			18.5			17.1	
Approach LOS		A			B			B			B	

Timer - Assigned Phs	1	2		4		6		8
Phs Duration (G+Y+Rc), s	11.2	21.2		16.3		32.4		16.3
Change Period (Y+Rc), s	6.5	* 5.3		6.5		* 5.3		6.5
Max Green Setting (Gmax), s	25.0	* 45		35.0		* 77		35.0
Max Q Clear Time (g_c+I1), s	3.0	11.2		8.5		9.3		5.2
Green Ext Time (p_c), s	0.0	4.4		0.2		4.7		0.4

Intersection Summary	
HCM 6th Ctrl Delay	12.6
HCM 6th LOS	B

Notes

* HCM 6th computational engine requires equal clearance times for the phases crossing the barrier.

Intersection	
Int Delay, s/veh	0

Movement	EBL	EBT	WBT	WBR	SBL	SBR
Lane Configurations		↑	↑		⋔	
Traffic Vol, veh/h	0	355	395	0	0	0
Future Vol, veh/h	0	355	395	0	0	0
Conflicting Peds, #/hr	0	0	0	0	0	0
Sign Control	Free	Free	Free	Free	Stop	Stop
RT Channelized	-	None	-	None	-	None
Storage Length	-	-	-	-	0	-
Veh in Median Storage, #	-	0	0	-	0	-
Grade, %	-	0	0	-	0	-
Peak Hour Factor	92	92	92	92	92	92
Heavy Vehicles, %	3	3	2	2	2	2
Mvmt Flow	0	386	429	0	0	0

Major/Minor	Major1		Major2		Minor2	
Conflicting Flow All	-	0	-	0	815	429
Stage 1	-	-	-	-	429	-
Stage 2	-	-	-	-	386	-
Critical Hdwy	-	-	-	-	6.42	6.22
Critical Hdwy Stg 1	-	-	-	-	5.42	-
Critical Hdwy Stg 2	-	-	-	-	5.42	-
Follow-up Hdwy	-	-	-	-	3.518	3.318
Pot Cap-1 Maneuver	0	-	-	0	347	626
Stage 1	0	-	-	0	657	-
Stage 2	0	-	-	0	687	-
Platoon blocked, %		-	-			
Mov Cap-1 Maneuver	-	-	-	-	347	626
Mov Cap-2 Maneuver	-	-	-	-	347	-
Stage 1	-	-	-	-	657	-
Stage 2	-	-	-	-	687	-

Approach	EB	WB	SB
HCM Control Delay, s	0	0	0
HCM LOS			A

Minor Lane/Major Mvmt	EBT	WBT	SBLn1
Capacity (veh/h)	-	-	-
HCM Lane V/C Ratio	-	-	-
HCM Control Delay (s)	-	-	0
HCM Lane LOS	-	-	A
HCM 95th %tile Q(veh)	-	-	-

Intersection	
Int Delay, s/veh	1.1

Movement	EBL	EBT	WBT	WBR	SBL	SBR
Lane Configurations						
Traffic Vol, veh/h	20	335	360	20	20	35
Future Vol, veh/h	20	335	360	20	20	35
Conflicting Peds, #/hr	1	0	0	1	0	0
Sign Control	Free	Free	Free	Free	Stop	Stop
RT Channelized	-	None	-	None	-	None
Storage Length	-	-	-	-	0	-
Veh in Median Storage, #	-	0	0	-	0	-
Grade, %	-	0	0	-	0	-
Peak Hour Factor	94	94	94	94	94	94
Heavy Vehicles, %	3	3	3	3	2	2
Mvmt Flow	21	356	383	21	21	37

Major/Minor	Major1		Major2		Minor2	
Conflicting Flow All	405	0	-	0	793	395
Stage 1	-	-	-	-	395	-
Stage 2	-	-	-	-	398	-
Critical Hdwy	4.13	-	-	-	6.42	6.22
Critical Hdwy Stg 1	-	-	-	-	5.42	-
Critical Hdwy Stg 2	-	-	-	-	5.42	-
Follow-up Hdwy	2.227	-	-	-	3.518	3.318
Pot Cap-1 Maneuver	1148	-	-	-	358	654
Stage 1	-	-	-	-	681	-
Stage 2	-	-	-	-	678	-
Platoon blocked, %		-	-	-		
Mov Cap-1 Maneuver	1147	-	-	-	349	653
Mov Cap-2 Maneuver	-	-	-	-	349	-
Stage 1	-	-	-	-	665	-
Stage 2	-	-	-	-	677	-

Approach	EB	WB	SB
HCM Control Delay, s	0.5	0	13.2
HCM LOS			B

Minor Lane/Major Mvmt	EBL	EBT	WBT	WBR	SBLn1
Capacity (veh/h)	1147	-	-	-	496
HCM Lane V/C Ratio	0.019	-	-	-	0.118
HCM Control Delay (s)	8.2	0	-	-	13.2
HCM Lane LOS	A	A	-	-	B
HCM 95th %tile Q(veh)	0.1	-	-	-	0.4

Intersection	
Int Delay, s/veh	0

Movement	EBL	EBT	WBT	WBR	SBL	SBR
Lane Configurations		↑	↑		⋔	
Traffic Vol, veh/h	0	355	380	0	0	0
Future Vol, veh/h	0	355	380	0	0	0
Conflicting Peds, #/hr	0	0	0	0	0	0
Sign Control	Free	Free	Free	Free	Stop	Stop
RT Channelized	-	None	-	None	-	None
Storage Length	-	-	-	-	0	-
Veh in Median Storage, #	-	0	0	-	0	-
Grade, %	-	0	0	-	0	-
Peak Hour Factor	92	92	92	92	92	92
Heavy Vehicles, %	2	2	3	3	2	2
Mvmt Flow	0	386	413	0	0	0

Major/Minor	Major1		Major2		Minor2	
Conflicting Flow All	-	0	-	0	799	413
Stage 1	-	-	-	-	413	-
Stage 2	-	-	-	-	386	-
Critical Hdwy	-	-	-	-	6.42	6.22
Critical Hdwy Stg 1	-	-	-	-	5.42	-
Critical Hdwy Stg 2	-	-	-	-	5.42	-
Follow-up Hdwy	-	-	-	-	3.518	3.318
Pot Cap-1 Maneuver	0	-	-	0	355	639
Stage 1	0	-	-	0	668	-
Stage 2	0	-	-	0	687	-
Platoon blocked, %		-	-			
Mov Cap-1 Maneuver	-	-	-	-	355	639
Mov Cap-2 Maneuver	-	-	-	-	355	-
Stage 1	-	-	-	-	668	-
Stage 2	-	-	-	-	687	-

Approach	EB	WB	SB
HCM Control Delay, s	0	0	0
HCM LOS			A

Minor Lane/Major Mvmt	EBT	WBT	SBLn1
Capacity (veh/h)	-	-	-
HCM Lane V/C Ratio	-	-	-
HCM Control Delay (s)	-	-	0
HCM Lane LOS	-	-	A
HCM 95th %tile Q(veh)	-	-	-

Intersection	
Int Delay, s/veh	0

Movement	EBT	EBR	WBL	WBT	NBL	NBR
Lane Configurations	↑			↑	⋔	
Traffic Vol, veh/h	355	0	0	380	0	0
Future Vol, veh/h	355	0	0	380	0	0
Conflicting Peds, #/hr	0	0	0	0	0	0
Sign Control	Free	Free	Free	Free	Stop	Stop
RT Channelized	-	None	-	None	-	None
Storage Length	-	-	-	-	0	-
Veh in Median Storage, #	0	-	-	0	0	-
Grade, %	0	-	-	0	0	-
Peak Hour Factor	92	92	92	92	92	92
Heavy Vehicles, %	2	2	3	3	2	2
Mvmt Flow	386	0	0	413	0	0

Major/Minor	Major1		Major2		Minor1	
Conflicting Flow All	0	-	-	-	799	386
Stage 1	-	-	-	-	386	-
Stage 2	-	-	-	-	413	-
Critical Hdwy	-	-	-	-	6.42	6.22
Critical Hdwy Stg 1	-	-	-	-	5.42	-
Critical Hdwy Stg 2	-	-	-	-	5.42	-
Follow-up Hdwy	-	-	-	-	3.518	3.318
Pot Cap-1 Maneuver	-	0	0	-	355	662
Stage 1	-	0	0	-	687	-
Stage 2	-	0	0	-	668	-
Platoon blocked, %	-			-		
Mov Cap-1 Maneuver	-	-	-	-	355	662
Mov Cap-2 Maneuver	-	-	-	-	355	-
Stage 1	-	-	-	-	687	-
Stage 2	-	-	-	-	668	-

Approach	EB	WB	NB
HCM Control Delay, s	0	0	0
HCM LOS			A

Minor Lane/Major Mvmt	NBLn1	EBT	WBT
Capacity (veh/h)	-	-	-
HCM Lane V/C Ratio	-	-	-
HCM Control Delay (s)	0	-	-
HCM Lane LOS	A	-	-
HCM 95th %tile Q(veh)	-	-	-

Intersection	
Int Delay, s/veh	5.6

Movement	EBL	EBT	EBR	WBL	WBT	WBR	NBL	NBT	NBR	SBL	SBT	SBR
Lane Configurations												
Traffic Vol, veh/h	50	235	70	20	255	40	50	25	10	55	30	75
Future Vol, veh/h	50	235	70	20	255	40	50	25	10	55	30	75
Conflicting Peds, #/hr	0	0	0	0	0	0	0	0	0	0	0	0
Sign Control	Free	Free	Free	Free	Free	Free	Stop	Stop	Stop	Stop	Stop	Stop
RT Channelized	-	-	None	-	-	None	-	-	None	-	-	None
Storage Length	175	-	-	150	-	125	-	-	-	100	-	-
Veh in Median Storage, #	-	0	-	-	0	-	-	0	-	-	0	-
Grade, %	-	0	-	-	0	-	-	0	-	-	0	-
Peak Hour Factor	92	92	92	92	92	92	92	92	92	92	92	92
Heavy Vehicles, %	2	2	2	3	3	3	2	2	2	1	1	1
Mvmt Flow	54	255	76	22	277	43	54	27	11	60	33	82

Major/Minor	Major1			Major2			Minor1			Minor2		
Conflicting Flow All	320	0	0	331	0	0	801	765	293	741	760	277
Stage 1	-	-	-	-	-	-	401	401	-	321	321	-
Stage 2	-	-	-	-	-	-	400	364	-	420	439	-
Critical Hdwy	4.12	-	-	4.13	-	-	7.12	6.52	6.22	7.11	6.51	6.21
Critical Hdwy Stg 1	-	-	-	-	-	-	6.12	5.52	-	6.11	5.51	-
Critical Hdwy Stg 2	-	-	-	-	-	-	6.12	5.52	-	6.11	5.51	-
Follow-up Hdwy	2.218	-	-	2.227	-	-	3.518	4.018	3.318	3.509	4.009	3.309
Pot Cap-1 Maneuver	1240	-	-	1223	-	-	303	333	746	333	337	764
Stage 1	-	-	-	-	-	-	626	601	-	693	653	-
Stage 2	-	-	-	-	-	-	626	624	-	613	580	-
Platoon blocked, %		-	-		-	-						
Mov Cap-1 Maneuver	1240	-	-	1223	-	-	238	313	746	292	316	764
Mov Cap-2 Maneuver	-	-	-	-	-	-	238	313	-	292	316	-
Stage 1	-	-	-	-	-	-	598	575	-	663	641	-
Stage 2	-	-	-	-	-	-	521	613	-	550	554	-

Approach	EB	WB	NB	SB
HCM Control Delay, s	1.1	0.5	24.1	15.8
HCM LOS			C	C

Minor Lane/Major Mvmt	NBLn1	EBL	EBT	EBR	WBL	WBT	WBR	SBLn1	SBLn2
Capacity (veh/h)	280	1240	-	-	1223	-	-	292	544
HCM Lane V/C Ratio	0.33	0.044	-	-	0.018	-	-	0.205	0.21
HCM Control Delay (s)	24.1	8	-	-	8	-	-	20.5	13.4
HCM Lane LOS	C	A	-	-	A	-	-	C	B
HCM 95th %tile Q(veh)	1.4	0.1	-	-	0.1	-	-	0.8	0.8

HCM 6th Signalized Intersection Summary
1: Jackson Dr & WIS-60

05/19/2020

Movement	EBL	EBT	EBR	WBL	WBT	WBR	NBL	NBT	NBR	SBL	SBT	SBR
Lane Configurations												
Traffic Volume (veh/h)	70	335	30	10	340	20	115	50	20	45	25	185
Future Volume (veh/h)	70	335	30	10	340	20	115	50	20	45	25	185
Initial Q (Qb), veh	0	0	0	0	0	0	0	0	0	0	0	0
Ped-Bike Adj(A_pbT)	1.00		1.00	1.00		1.00	1.00		0.97	1.00		0.99
Parking Bus, Adj	1.00	1.00	1.00	1.00	1.00	1.00	1.00	1.00	1.00	1.00	1.00	1.00
Work Zone On Approach		No			No			No			No	
Adj Sat Flow, veh/h/ln	1752	1554	1554	1767	1767	1767	1826	1619	1619	1856	1646	1646
Adj Flow Rate, veh/h	73	349	31	10	354	21	120	52	21	47	26	193
Peak Hour Factor	0.96	0.96	0.96	0.96	0.96	0.96	0.96	0.96	0.96	0.96	0.96	0.96
Percent Heavy Veh, %	10	10	10	9	9	9	5	5	5	3	3	3
Cap, veh/h	501	723	64	69	497	29	294	306	124	447	47	351
Arrive On Green	0.10	0.51	0.51	0.31	0.31	0.31	0.28	0.28	0.28	0.28	0.28	0.28
Sat Flow, veh/h	1668	1406	125	16	1625	95	1131	1087	439	1311	168	1246
Grp Volume(v), veh/h	73	0	380	385	0	0	120	0	73	47	0	219
Grp Sat Flow(s),veh/h/ln	1668	0	1531	1735	0	0	1131	0	1525	1311	0	1413
Q Serve(g_s), s	1.5	0.0	9.3	0.0	0.0	0.0	5.8	0.0	2.1	1.6	0.0	7.6
Cycle Q Clear(g_c), s	1.5	0.0	9.3	11.3	0.0	0.0	13.4	0.0	2.1	3.7	0.0	7.6
Prop In Lane	1.00		0.08	0.03		0.05	1.00		0.29	1.00		0.88
Lane Grp Cap(c), veh/h	501	0	787	595	0	0	294	0	430	447	0	398
V/C Ratio(X)	0.15	0.00	0.48	0.65	0.00	0.00	0.41	0.00	0.17	0.11	0.00	0.55
Avail Cap(c_a), veh/h	1063	0	2026	1404	0	0	661	0	924	871	0	856
HCM Platoon Ratio	1.00	1.00	1.00	1.00	1.00	1.00	1.00	1.00	1.00	1.00	1.00	1.00
Upstream Filter(I)	1.00	0.00	1.00	1.00	0.00	0.00	1.00	0.00	1.00	1.00	0.00	1.00
Uniform Delay (d), s/veh	9.6	0.0	9.1	17.8	0.0	0.0	23.3	0.0	15.7	17.1	0.0	17.6
Incr Delay (d2), s/veh	0.0	0.0	0.7	1.7	0.0	0.0	0.3	0.0	0.1	0.0	0.0	0.4
Initial Q Delay(d3),s/veh	0.0	0.0	0.0	0.0	0.0	0.0	0.0	0.0	0.0	0.0	0.0	0.0
%ile BackOfQ(95%),veh/ln	0.9	0.0	4.9	8.0	0.0	0.0	2.7	0.0	1.2	0.8	0.0	4.2
Unsig. Movement Delay, s/veh												
LnGrp Delay(d),s/veh	9.7	0.0	9.8	19.6	0.0	0.0	23.7	0.0	15.7	17.1	0.0	18.1
LnGrp LOS	A	A	A	B	A	A	C	A	B	B	A	B
Approach Vol, veh/h		453			385			193			266	
Approach Delay, s/veh		9.7			19.6			20.7			17.9	
Approach LOS		A			B			C			B	

Timer - Assigned Phs	1	2		4		6		8
Phs Duration (G+Y+Rc), s	12.0	23.0		22.8		35.0		22.8
Change Period (Y+Rc), s	6.5	* 5.3		6.5		* 5.3		6.5
Max Green Setting (Gmax), s	25.0	* 45		35.0		* 77		35.0
Max Q Clear Time (g_c+I1), s	3.5	13.3		15.4		11.3		9.6
Green Ext Time (p_c), s	0.1	4.1		0.4		4.4		0.8

Intersection Summary	
HCM 6th Ctrl Delay	16.0
HCM 6th LOS	B

Notes

* HCM 6th computational engine requires equal clearance times for the phases crossing the barrier.

Intersection	
Int Delay, s/veh	0.2

Movement	EBL	EBT	WBT	WBR	SBL	SBR
Lane Configurations		↑	↑		⋔	
Traffic Vol, veh/h	10	390	370	5	5	0
Future Vol, veh/h	10	390	370	5	5	0
Conflicting Peds, #/hr	0	0	0	0	0	0
Sign Control	Free	Free	Free	Free	Stop	Stop
RT Channelized	-	None	-	None	-	None
Storage Length	-	-	-	-	0	-
Veh in Median Storage, #	-	0	0	-	0	-
Grade, %	-	0	0	-	0	-
Peak Hour Factor	92	92	92	92	92	92
Heavy Vehicles, %	4	4	9	9	2	2
Mvmt Flow	11	424	402	5	5	0

Major/Minor	Major1		Major2		Minor2	
Conflicting Flow All	407	0	-	0	851	405
Stage 1	-	-	-	-	405	-
Stage 2	-	-	-	-	446	-
Critical Hdwy	4.14	-	-	-	6.42	6.22
Critical Hdwy Stg 1	-	-	-	-	5.42	-
Critical Hdwy Stg 2	-	-	-	-	5.42	-
Follow-up Hdwy	2.236	-	-	-	3.518	3.318
Pot Cap-1 Maneuver	1141	-	-	-	330	646
Stage 1	-	-	-	-	673	-
Stage 2	-	-	-	-	645	-
Platoon blocked, %		-	-	-		
Mov Cap-1 Maneuver	1141	-	-	-	326	646
Mov Cap-2 Maneuver	-	-	-	-	326	-
Stage 1	-	-	-	-	664	-
Stage 2	-	-	-	-	645	-

Approach	EB	WB	SB
HCM Control Delay, s	0.2	0	16.2
HCM LOS			C

Minor Lane/Major Mvmt	EBL	EBT	WBT	WBR	SBLn1
Capacity (veh/h)	1141	-	-	-	326
HCM Lane V/C Ratio	0.01	-	-	-	0.017
HCM Control Delay (s)	8.2	-	-	-	16.2
HCM Lane LOS	A	-	-	-	C
HCM 95th %tile Q(veh)	0	-	-	-	0.1

Intersection	
Int Delay, s/veh	2.9

Movement	EBL	EBT	WBT	WBR	SBL	SBR
Lane Configurations						
Traffic Vol, veh/h	10	385	315	15	70	60
Future Vol, veh/h	10	385	315	15	70	60
Conflicting Peds, #/hr	0	0	0	0	0	0
Sign Control	Free	Free	Free	Free	Stop	Stop
RT Channelized	-	None	-	None	-	None
Storage Length	-	-	-	-	0	-
Veh in Median Storage, #	-	0	0	-	0	-
Grade, %	-	0	0	-	0	-
Peak Hour Factor	84	84	84	84	84	84
Heavy Vehicles, %	4	4	6	6	1	1
Mvmt Flow	12	458	375	18	83	71

Major/Minor	Major1		Major2		Minor2	
Conflicting Flow All	393	0	-	0	866	384
Stage 1	-	-	-	-	384	-
Stage 2	-	-	-	-	482	-
Critical Hdwy	4.14	-	-	-	6.41	6.21
Critical Hdwy Stg 1	-	-	-	-	5.41	-
Critical Hdwy Stg 2	-	-	-	-	5.41	-
Follow-up Hdwy	2.236	-	-	-	3.509	3.309
Pot Cap-1 Maneuver	1155	-	-	-	325	666
Stage 1	-	-	-	-	691	-
Stage 2	-	-	-	-	623	-
Platoon blocked, %		-	-	-		
Mov Cap-1 Maneuver	1155	-	-	-	320	666
Mov Cap-2 Maneuver	-	-	-	-	320	-
Stage 1	-	-	-	-	681	-
Stage 2	-	-	-	-	623	-

Approach	EB	WB	SB
HCM Control Delay, s	0.2	0	18.4
HCM LOS			C

Minor Lane/Major Mvmt	EBL	EBT	WBT	WBR	SBLn1
Capacity (veh/h)	1155	-	-	-	421
HCM Lane V/C Ratio	0.01	-	-	-	0.368
HCM Control Delay (s)	8.1	0	-	-	18.4
HCM Lane LOS	A	A	-	-	C
HCM 95th %tile Q(veh)	0	-	-	-	1.7

Intersection	
Int Delay, s/veh	0

Movement	EBL	EBT	WBT	WBR	SBL	SBR
Lane Configurations		↑	↑		⋔	
Traffic Vol, veh/h	0	455	330	0	0	0
Future Vol, veh/h	0	455	330	0	0	0
Conflicting Peds, #/hr	0	0	0	0	0	0
Sign Control	Free	Free	Free	Free	Stop	Stop
RT Channelized	-	None	-	None	-	None
Storage Length	-	-	-	-	0	-
Veh in Median Storage, #	-	0	0	-	0	-
Grade, %	-	0	0	-	0	-
Peak Hour Factor	92	92	92	92	92	92
Heavy Vehicles, %	6	6	6	6	2	2
Mvmt Flow	0	495	359	0	0	0

Major/Minor	Major1		Major2		Minor2	
Conflicting Flow All	-	0	-	0	854	359
Stage 1	-	-	-	-	359	-
Stage 2	-	-	-	-	495	-
Critical Hdwy	-	-	-	-	6.42	6.22
Critical Hdwy Stg 1	-	-	-	-	5.42	-
Critical Hdwy Stg 2	-	-	-	-	5.42	-
Follow-up Hdwy	-	-	-	-	3.518	3.318
Pot Cap-1 Maneuver	0	-	-	0	329	685
Stage 1	0	-	-	0	707	-
Stage 2	0	-	-	0	613	-
Platoon blocked, %		-	-			
Mov Cap-1 Maneuver	-	-	-	-	329	685
Mov Cap-2 Maneuver	-	-	-	-	329	-
Stage 1	-	-	-	-	707	-
Stage 2	-	-	-	-	613	-

Approach	EB	WB	SB
HCM Control Delay, s	0	0	0
HCM LOS			A

Minor Lane/Major Mvmt	EBT	WBT	SBLn1
Capacity (veh/h)	-	-	-
HCM Lane V/C Ratio	-	-	-
HCM Control Delay (s)	-	-	0
HCM Lane LOS	-	-	A
HCM 95th %tile Q(veh)	-	-	-

Intersection	
Int Delay, s/veh	0

Movement	EBT	EBR	WBL	WBT	NBL	NBR
Lane Configurations	↑			↑	⋔	
Traffic Vol, veh/h	455	0	0	330	0	0
Future Vol, veh/h	455	0	0	330	0	0
Conflicting Peds, #/hr	0	0	0	0	0	0
Sign Control	Free	Free	Free	Free	Stop	Stop
RT Channelized	-	None	-	None	-	None
Storage Length	-	-	-	-	0	-
Veh in Median Storage, #	0	-	-	0	0	-
Grade, %	0	-	-	0	0	-
Peak Hour Factor	92	92	92	92	92	92
Heavy Vehicles, %	6	6	6	6	2	2
Mvmt Flow	495	0	0	359	0	0

Major/Minor	Major1		Major2		Minor1	
Conflicting Flow All	0	-	-	-	854	495
Stage 1	-	-	-	-	495	-
Stage 2	-	-	-	-	359	-
Critical Hdwy	-	-	-	-	6.42	6.22
Critical Hdwy Stg 1	-	-	-	-	5.42	-
Critical Hdwy Stg 2	-	-	-	-	5.42	-
Follow-up Hdwy	-	-	-	-	3.518	3.318
Pot Cap-1 Maneuver	-	0	0	-	329	575
Stage 1	-	0	0	-	613	-
Stage 2	-	0	0	-	707	-
Platoon blocked, %	-			-		
Mov Cap-1 Maneuver	-	-	-	-	329	575
Mov Cap-2 Maneuver	-	-	-	-	329	-
Stage 1	-	-	-	-	613	-
Stage 2	-	-	-	-	707	-

Approach	EB	WB	NB
HCM Control Delay, s	0	0	0
HCM LOS			A

Minor Lane/Major Mvmt	NBLn1	EBT	WBT
Capacity (veh/h)	-	-	-
HCM Lane V/C Ratio	-	-	-
HCM Control Delay (s)	0	-	-
HCM Lane LOS	A	-	-
HCM 95th %tile Q(veh)	-	-	-

Intersection	
Int Delay, s/veh	6.8

Movement	EBL	EBT	EBR	WBL	WBT	WBR	NBL	NBT	NBR	SBL	SBT	SBR
Lane Configurations												
Traffic Vol, veh/h	70	350	35	15	235	90	25	20	25	80	15	70
Future Vol, veh/h	70	350	35	15	235	90	25	20	25	80	15	70
Conflicting Peds, #/hr	0	0	1	1	0	0	0	0	0	0	0	0
Sign Control	Free	Free	Free	Free	Free	Free	Stop	Stop	Stop	Stop	Stop	Stop
RT Channelized	-	-	None	-	-	None	-	-	None	-	-	None
Storage Length	175	-	-	150	-	125	-	-	-	100	-	-
Veh in Median Storage, #	-	0	-	-	0	-	-	0	-	-	0	-
Grade, %	-	0	-	-	0	-	-	0	-	-	0	-
Peak Hour Factor	84	84	84	84	84	84	84	84	84	84	84	84
Heavy Vehicles, %	6	6	6	4	4	4	7	7	7	6	6	6
Mvmt Flow	83	417	42	18	280	107	30	24	30	95	18	83

Major/Minor	Major1			Major2			Minor1			Minor2		
Conflicting Flow All	387	0	0	460	0	0	1025	1028	439	947	942	280
Stage 1	-	-	-	-	-	-	605	605	-	316	316	-
Stage 2	-	-	-	-	-	-	420	423	-	631	626	-
Critical Hdwy	4.16	-	-	4.14	-	-	7.17	6.57	6.27	7.16	6.56	6.26
Critical Hdwy Stg 1	-	-	-	-	-	-	6.17	5.57	-	6.16	5.56	-
Critical Hdwy Stg 2	-	-	-	-	-	-	6.17	5.57	-	6.16	5.56	-
Follow-up Hdwy	2.254	-	-	2.236	-	-	3.563	4.063	3.363	3.554	4.054	3.354
Pot Cap-1 Maneuver	1150	-	-	1091	-	-	209	229	607	237	259	749
Stage 1	-	-	-	-	-	-	476	480	-	687	648	-
Stage 2	-	-	-	-	-	-	601	579	-	462	471	-
Platoon blocked, %		-	-		-	-						
Mov Cap-1 Maneuver	1150	-	-	1090	-	-	163	209	606	192	236	749
Mov Cap-2 Maneuver	-	-	-	-	-	-	163	209	-	192	236	-
Stage 1	-	-	-	-	-	-	441	445	-	638	637	-
Stage 2	-	-	-	-	-	-	511	569	-	386	437	-

Approach	EB	WB	NB	SB
HCM Control Delay, s	1.3	0.4	27.6	26.6
HCM LOS			D	D

Minor Lane/Major Mvmt	NBLn1	EBL	EBT	EBR	WBL	WBT	WBR	SBLn1	SBLn2
Capacity (veh/h)	241	1150	-	-	1090	-	-	192	541
HCM Lane V/C Ratio	0.346	0.072	-	-	0.016	-	-	0.496	0.187
HCM Control Delay (s)	27.6	8.4	-	-	8.4	-	-	40.9	13.2
HCM Lane LOS	D	A	-	-	A	-	-	E	B
HCM 95th %tile Q(veh)	1.5	0.2	-	-	0.1	-	-	2.5	0.7

HCM 6th Signalized Intersection Summary
1: Jackson Dr & WIS-60

05/19/2020

Movement	EBL	EBT	EBR	WBL	WBT	WBR	NBL	NBT	NBR	SBL	SBT	SBR
Lane Configurations												
Traffic Volume (veh/h)	180	405	125	15	325	50	70	80	15	40	65	105
Future Volume (veh/h)	180	405	125	15	325	50	70	80	15	40	65	105
Initial Q (Qb), veh	0	0	0	0	0	0	0	0	0	0	0	0
Ped-Bike Adj(A_pbT)	1.00		0.98	1.00		0.98	0.99		0.99	0.99		0.97
Parking Bus, Adj	1.00	1.00	1.00	1.00	1.00	1.00	1.00	1.00	1.00	1.00	1.00	1.00
Work Zone On Approach		No			No			No			No	
Adj Sat Flow, veh/h/ln	1856	1646	1646	1841	1841	1841	1856	1646	1646	1885	1672	1672
Adj Flow Rate, veh/h	194	435	134	16	349	54	75	86	16	43	70	113
Peak Hour Factor	0.93	0.93	0.93	0.93	0.93	0.93	0.93	0.93	0.93	0.93	0.93	0.93
Percent Heavy Veh, %	3	3	3	4	4	4	3	3	3	1	1	1
Cap, veh/h	596	683	210	74	487	73	263	304	57	349	127	205
Arrive On Green	0.13	0.57	0.57	0.32	0.32	0.32	0.23	0.23	0.23	0.23	0.23	0.23
Sat Flow, veh/h	1767	1200	370	27	1507	227	1185	1347	251	1294	564	910
Grp Volume(v), veh/h	194	0	569	419	0	0	75	0	102	43	0	183
Grp Sat Flow(s),veh/h/ln	1767	0	1569	1761	0	0	1185	0	1598	1294	0	1474
Q Serve(g_s), s	3.6	0.0	14.1	1.0	0.0	0.0	3.4	0.0	3.0	1.6	0.0	6.3
Cycle Q Clear(g_c), s	3.6	0.0	14.1	11.9	0.0	0.0	9.7	0.0	3.0	4.7	0.0	6.3
Prop In Lane	1.00		0.24	0.04		0.13	1.00		0.16	1.00		0.62
Lane Grp Cap(c), veh/h	596	0	893	634	0	0	263	0	360	349	0	333
V/C Ratio(X)	0.33	0.00	0.64	0.66	0.00	0.00	0.29	0.00	0.28	0.12	0.00	0.55
Avail Cap(c_a), veh/h	1129	0	2088	1422	0	0	716	0	972	844	0	897
HCM Platoon Ratio	1.00	1.00	1.00	1.00	1.00	1.00	1.00	1.00	1.00	1.00	1.00	1.00
Upstream Filter(I)	1.00	0.00	1.00	1.00	0.00	0.00	1.00	0.00	1.00	1.00	0.00	1.00
Uniform Delay (d), s/veh	8.4	0.0	8.4	17.2	0.0	0.0	24.0	0.0	18.4	20.4	0.0	19.7
Incr Delay (d2), s/veh	0.1	0.0	1.1	1.7	0.0	0.0	0.2	0.0	0.2	0.1	0.0	0.5
Initial Q Delay(d3),s/veh	0.0	0.0	0.0	0.0	0.0	0.0	0.0	0.0	0.0	0.0	0.0	0.0
%ile BackOfQ(95%),veh/ln	2.2	0.0	7.3	8.3	0.0	0.0	1.7	0.0	1.9	0.9	0.0	3.7
Unsig. Movement Delay, s/veh												
LnGrp Delay(d),s/veh	8.5	0.0	9.5	18.9	0.0	0.0	24.2	0.0	18.6	20.4	0.0	20.2
LnGrp LOS	A	A	A	B	A	A	C	A	B	C	A	C
Approach Vol, veh/h		763			419			177			226	
Approach Delay, s/veh		9.2			18.9			21.0			20.3	
Approach LOS		A			B			C			C	

Timer - Assigned Phs	1	2		4		6		8				
Phs Duration (G+Y+Rc), s	14.1	23.9		19.5		38.0		19.5				
Change Period (Y+Rc), s	6.5	* 5.3		6.5		* 5.3		6.5				
Max Green Setting (Gmax), s	25.0	* 45		35.0		* 77		35.0				
Max Q Clear Time (g_c+I1), s	5.6	13.9		11.7		16.1		8.3				
Green Ext Time (p_c), s	0.2	4.6		0.4		7.6		0.6				

Intersection Summary												
HCM 6th Ctrl Delay			14.7									
HCM 6th LOS			B									

Notes

* HCM 6th computational engine requires equal clearance times for the phases crossing the barrier.

Intersection	
Int Delay, s/veh	0.3

Movement	EBL	EBT	WBT	WBR	SBL	SBR
Lane Configurations		↑	↑		⋔	
Traffic Vol, veh/h	5	455	385	0	10	5
Future Vol, veh/h	5	455	385	0	10	5
Conflicting Peds, #/hr	0	0	0	0	0	0
Sign Control	Free	Free	Free	Free	Stop	Stop
RT Channelized	-	None	-	None	-	None
Storage Length	-	-	-	-	0	-
Veh in Median Storage, #	-	0	0	-	0	-
Grade, %	-	0	0	-	0	-
Peak Hour Factor	92	92	92	92	92	92
Heavy Vehicles, %	3	3	4	4	2	2
Mvmt Flow	5	495	418	0	11	5

Major/Minor	Major1		Major2		Minor2	
Conflicting Flow All	418	0	-	0	923	418
Stage 1	-	-	-	-	418	-
Stage 2	-	-	-	-	505	-
Critical Hdwy	4.13	-	-	-	6.42	6.22
Critical Hdwy Stg 1	-	-	-	-	5.42	-
Critical Hdwy Stg 2	-	-	-	-	5.42	-
Follow-up Hdwy	2.227	-	-	-	3.518	3.318
Pot Cap-1 Maneuver	1136	-	-	0	299	635
Stage 1	-	-	-	0	664	-
Stage 2	-	-	-	0	606	-
Platoon blocked, %		-	-			
Mov Cap-1 Maneuver	1136	-	-	-	297	635
Mov Cap-2 Maneuver	-	-	-	-	297	-
Stage 1	-	-	-	-	660	-
Stage 2	-	-	-	-	606	-

Approach	EB	WB	SB
HCM Control Delay, s	0.1	0	15.4
HCM LOS			C

Minor Lane/Major Mvmt	EBL	EBT	WBT	SBLn1
Capacity (veh/h)	1136	-	-	361
HCM Lane V/C Ratio	0.005	-	-	0.045
HCM Control Delay (s)	8.2	-	-	15.4
HCM Lane LOS	A	-	-	C
HCM 95th %tile Q(veh)	0	-	-	0.1

Intersection	
Int Delay, s/veh	1.1

Movement	EBL	EBT	WBT	WBR	SBL	SBR
Lane Configurations						
Traffic Vol, veh/h	50	415	375	45	20	10
Future Vol, veh/h	50	415	375	45	20	10
Conflicting Peds, #/hr	1	0	0	1	0	0
Sign Control	Free	Free	Free	Free	Stop	Stop
RT Channelized	-	None	-	None	-	None
Storage Length	-	-	-	-	0	-
Veh in Median Storage, #	-	0	0	-	0	-
Grade, %	-	0	0	-	0	-
Peak Hour Factor	87	87	87	87	87	87
Heavy Vehicles, %	3	3	4	4	1	1
Mvmt Flow	57	477	431	52	23	11

Major/Minor	Major1		Major2		Minor2	
Conflicting Flow All	484	0	-	0	1049	458
Stage 1	-	-	-	-	458	-
Stage 2	-	-	-	-	591	-
Critical Hdwy	4.13	-	-	-	6.41	6.21
Critical Hdwy Stg 1	-	-	-	-	5.41	-
Critical Hdwy Stg 2	-	-	-	-	5.41	-
Follow-up Hdwy	2.227	-	-	-	3.509	3.309
Pot Cap-1 Maneuver	1074	-	-	-	253	605
Stage 1	-	-	-	-	639	-
Stage 2	-	-	-	-	555	-
Platoon blocked, %		-	-	-		
Mov Cap-1 Maneuver	1073	-	-	-	234	604
Mov Cap-2 Maneuver	-	-	-	-	234	-
Stage 1	-	-	-	-	592	-
Stage 2	-	-	-	-	554	-

Approach	EB	WB	SB
HCM Control Delay, s	0.9	0	18.9
HCM LOS			C

Minor Lane/Major Mvmt	EBL	EBT	WBT	WBR	SBLn1
Capacity (veh/h)	1073	-	-	-	294
HCM Lane V/C Ratio	0.054	-	-	-	0.117
HCM Control Delay (s)	8.5	0	-	-	18.9
HCM Lane LOS	A	A	-	-	C
HCM 95th %tile Q(veh)	0.2	-	-	-	0.4

Intersection	
Int Delay, s/veh	0

Movement	EBL	EBT	WBT	WBR	SBL	SBR
Lane Configurations		↑	↑		⋔	
Traffic Vol, veh/h	0	435	420	0	0	0
Future Vol, veh/h	0	435	420	0	0	0
Conflicting Peds, #/hr	0	0	0	0	0	0
Sign Control	Free	Free	Free	Free	Stop	Stop
RT Channelized	-	None	-	None	-	None
Storage Length	-	-	-	-	0	-
Veh in Median Storage, #	-	0	0	-	0	-
Grade, %	-	0	0	-	0	-
Peak Hour Factor	92	92	92	92	92	92
Heavy Vehicles, %	2	2	4	4	2	2
Mvmt Flow	0	473	457	0	0	0

Major/Minor	Major1		Major2		Minor2	
Conflicting Flow All	-	0	-	0	930	457
Stage 1	-	-	-	-	457	-
Stage 2	-	-	-	-	473	-
Critical Hdwy	-	-	-	-	6.42	6.22
Critical Hdwy Stg 1	-	-	-	-	5.42	-
Critical Hdwy Stg 2	-	-	-	-	5.42	-
Follow-up Hdwy	-	-	-	-	3.518	3.318
Pot Cap-1 Maneuver	0	-	-	0	297	604
Stage 1	0	-	-	0	638	-
Stage 2	0	-	-	0	627	-
Platoon blocked, %		-	-			
Mov Cap-1 Maneuver	-	-	-	-	297	604
Mov Cap-2 Maneuver	-	-	-	-	297	-
Stage 1	-	-	-	-	638	-
Stage 2	-	-	-	-	627	-

Approach	EB	WB	SB
HCM Control Delay, s	0	0	0
HCM LOS			A

Minor Lane/Major Mvmt	EBT	WBT	SBLn1
Capacity (veh/h)	-	-	-
HCM Lane V/C Ratio	-	-	-
HCM Control Delay (s)	-	-	0
HCM Lane LOS	-	-	A
HCM 95th %tile Q(veh)	-	-	-

Intersection	
Int Delay, s/veh	0

Movement	EBT	EBR	WBL	WBT	NBL	NBR
Lane Configurations	↑			↑	⋔	
Traffic Vol, veh/h	435	0	0	420	0	0
Future Vol, veh/h	435	0	0	420	0	0
Conflicting Peds, #/hr	0	0	0	0	0	0
Sign Control	Free	Free	Free	Free	Stop	Stop
RT Channelized	-	None	-	None	-	None
Storage Length	-	-	-	-	0	-
Veh in Median Storage, #	0	-	-	0	0	-
Grade, %	0	-	-	0	0	-
Peak Hour Factor	92	92	92	92	92	92
Heavy Vehicles, %	2	2	4	4	2	2
Mvmt Flow	473	0	0	457	0	0

Major/Minor	Major1		Major2		Minor1	
Conflicting Flow All	0	-	-	-	930	473
Stage 1	-	-	-	-	473	-
Stage 2	-	-	-	-	457	-
Critical Hdwy	-	-	-	-	6.42	6.22
Critical Hdwy Stg 1	-	-	-	-	5.42	-
Critical Hdwy Stg 2	-	-	-	-	5.42	-
Follow-up Hdwy	-	-	-	-	3.518	3.318
Pot Cap-1 Maneuver	-	0	0	-	297	591
Stage 1	-	0	0	-	627	-
Stage 2	-	0	0	-	638	-
Platoon blocked, %	-			-		
Mov Cap-1 Maneuver	-	-	-	-	297	591
Mov Cap-2 Maneuver	-	-	-	-	297	-
Stage 1	-	-	-	-	627	-
Stage 2	-	-	-	-	638	-

Approach	EB	WB	NB
HCM Control Delay, s	0	0	0
HCM LOS			A

Minor Lane/Major Mvmt	NBLn1	EBT	WBT
Capacity (veh/h)	-	-	-
HCM Lane V/C Ratio	-	-	-
HCM Control Delay (s)	0	-	-
HCM Lane LOS	A	-	-
HCM 95th %tile Q(veh)	-	-	-

Intersection	
Int Delay, s/veh	11.6

Movement	EBL	EBT	EBR	WBL	WBT	WBR	NBL	NBT	NBR	SBL	SBT	SBR
Lane Configurations												
Traffic Vol, veh/h	55	280	100	35	315	80	50	40	20	55	35	55
Future Vol, veh/h	55	280	100	35	315	80	50	40	20	55	35	55
Conflicting Peds, #/hr	0	0	0	0	0	0	0	0	0	0	0	0
Sign Control	Free	Free	Free	Free	Free	Free	Stop	Stop	Stop	Stop	Stop	Stop
RT Channelized	-	-	None	-	-	None	-	-	None	-	-	None
Storage Length	175	-	-	150	-	125	-	-	-	100	-	-
Veh in Median Storage, #	-	0	-	-	0	-	-	0	-	-	0	-
Grade, %	-	0	-	-	0	-	-	0	-	-	0	-
Peak Hour Factor	82	82	82	82	82	82	82	82	82	82	82	82
Heavy Vehicles, %	2	2	2	2	2	2	1	1	1	1	1	1
Mvmt Flow	67	341	122	43	384	98	61	49	24	67	43	67

Major/Minor	Major1			Major2			Minor1			Minor2		
Conflicting Flow All	482	0	0	463	0	0	1110	1104	402	1043	1067	384
Stage 1	-	-	-	-	-	-	536	536	-	470	470	-
Stage 2	-	-	-	-	-	-	574	568	-	573	597	-
Critical Hdwy	4.12	-	-	4.12	-	-	7.11	6.51	6.21	7.11	6.51	6.21
Critical Hdwy Stg 1	-	-	-	-	-	-	6.11	5.51	-	6.11	5.51	-
Critical Hdwy Stg 2	-	-	-	-	-	-	6.11	5.51	-	6.11	5.51	-
Follow-up Hdwy	2.218	-	-	2.218	-	-	3.509	4.009	3.309	3.509	4.009	3.309
Pot Cap-1 Maneuver	1081	-	-	1098	-	-	187	212	650	208	223	666
Stage 1	-	-	-	-	-	-	530	525	-	576	562	-
Stage 2	-	-	-	-	-	-	506	508	-	506	493	-
Platoon blocked, %		-	-		-	-						
Mov Cap-1 Maneuver	1081	-	-	1098	-	-	130	191	650	149	201	666
Mov Cap-2 Maneuver	-	-	-	-	-	-	130	191	-	149	201	-
Stage 1	-	-	-	-	-	-	497	492	-	540	540	-
Stage 2	-	-	-	-	-	-	403	488	-	412	462	-

Approach	EB	WB	NB	SB
HCM Control Delay, s	1.1	0.7	71.3	30.4
HCM LOS			F	D

Minor Lane/Major Mvmt	NBLn1	EBL	EBT	EBR	WBL	WBT	WBR	SBLn1	SBLn2
Capacity (veh/h)	176	1081	-	-	1098	-	-	149	351
HCM Lane V/C Ratio	0.762	0.062	-	-	0.039	-	-	0.45	0.313
HCM Control Delay (s)	71.3	8.6	-	-	8.4	-	-	47.6	19.9
HCM Lane LOS	F	A	-	-	A	-	-	E	C
HCM 95th %tile Q(veh)	4.9	0.2	-	-	0.1	-	-	2	1.3

HCM 6th Signalized Intersection Summary
1: Jackson Dr & WIS-60

05/19/2020

Movement	EBL	EBT	EBR	WBL	WBT	WBR	NBL	NBT	NBR	SBL	SBT	SBR
Lane Configurations												
Traffic Volume (veh/h)	65	320	85	15	350	35	95	40	15	25	30	80
Future Volume (veh/h)	65	320	85	15	350	35	95	40	15	25	30	80
Initial Q (Qb), veh	0	0	0	0	0	0	0	0	0	0	0	0
Ped-Bike Adj(A_pbT)	1.00		1.00	1.00		1.00	1.00		1.00	1.00		1.00
Parking Bus, Adj	1.00	1.00	1.00	1.00	1.00	1.00	1.00	1.00	1.00	1.00	1.00	1.00
Work Zone On Approach		No			No			No			No	
Adj Sat Flow, veh/h/ln	1870	1659	1659	1870	1870	1870	1885	1672	1672	1870	1659	1659
Adj Flow Rate, veh/h	66	327	87	15	357	36	97	41	15	26	31	82
Peak Hour Factor	0.98	0.98	0.98	0.98	0.98	0.98	0.98	0.98	0.98	0.98	0.98	0.98
Percent Heavy Veh, %	2	2	2	2	2	2	1	1	1	2	2	2
Cap, veh/h	599	705	187	85	536	53	319	234	86	378	81	213
Arrive On Green	0.10	0.56	0.56	0.33	0.33	0.33	0.20	0.20	0.20	0.20	0.20	0.20
Sat Flow, veh/h	1781	1262	336	26	1630	160	1290	1168	427	1348	402	1065
Grp Volume(v), veh/h	66	0	414	408	0	0	97	0	56	26	0	113
Grp Sat Flow(s),veh/h/ln	1781	0	1597	1817	0	0	1290	0	1595	1348	0	1467
Q Serve(g_s), s	1.0	0.0	7.6	0.0	0.0	0.0	3.4	0.0	1.4	0.8	0.0	3.3
Cycle Q Clear(g_c), s	1.0	0.0	7.6	9.4	0.0	0.0	6.7	0.0	1.4	2.2	0.0	3.3
Prop In Lane	1.00		0.21	0.04		0.09	1.00		0.27	1.00		0.73
Lane Grp Cap(c), veh/h	599	0	892	674	0	0	319	0	320	378	0	294
V/C Ratio(X)	0.11	0.00	0.46	0.61	0.00	0.00	0.30	0.00	0.18	0.07	0.00	0.38
Avail Cap(c_a), veh/h	1336	0	2496	1724	0	0	983	0	1140	1071	0	1049
HCM Platoon Ratio	1.00	1.00	1.00	1.00	1.00	1.00	1.00	1.00	1.00	1.00	1.00	1.00
Upstream Filter(I)	1.00	0.00	1.00	1.00	0.00	0.00	1.00	0.00	1.00	1.00	0.00	1.00
Uniform Delay (d), s/veh	7.2	0.0	6.4	14.2	0.0	0.0	19.9	0.0	16.2	17.1	0.0	17.0
Incr Delay (d2), s/veh	0.0	0.0	0.6	1.3	0.0	0.0	0.2	0.0	0.1	0.0	0.0	0.3
Initial Q Delay(d3),s/veh	0.0	0.0	0.0	0.0	0.0	0.0	0.0	0.0	0.0	0.0	0.0	0.0
%ile BackOfQ(95%),veh/ln	0.6	0.0	3.6	6.5	0.0	0.0	1.8	0.0	0.9	0.4	0.0	1.9
Unsig. Movement Delay, s/veh												
LnGrp Delay(d),s/veh	7.3	0.0	7.0	15.5	0.0	0.0	20.1	0.0	16.3	17.2	0.0	17.3
LnGrp LOS	A	A	A	B	A	A	C	A	B	B	A	B
Approach Vol, veh/h		480			408			153			139	
Approach Delay, s/veh		7.0			15.5			18.7			17.2	
Approach LOS		A			B			B			B	

Timer - Assigned Phs	1	2		4		6		8
Phs Duration (G+Y+Rc), s	11.2	21.4		16.3		32.7		16.3
Change Period (Y+Rc), s	6.5	* 5.3		6.5		* 5.3		6.5
Max Green Setting (Gmax), s	25.0	* 45		35.0		* 77		35.0
Max Q Clear Time (g_c+I1), s	3.0	11.4		8.7		9.6		5.3
Green Ext Time (p_c), s	0.0	4.5		0.2		4.9		0.4

Intersection Summary	
HCM 6th Ctrl Delay	12.7
HCM 6th LOS	B

Notes

* HCM 6th computational engine requires equal clearance times for the phases crossing the barrier.

Intersection	
Int Delay, s/veh	0

Movement	EBL	EBT	WBT	WBR	SBL	SBR
Lane Configurations		↑	↑		⋔	
Traffic Vol, veh/h	0	360	400	0	0	0
Future Vol, veh/h	0	360	400	0	0	0
Conflicting Peds, #/hr	0	0	0	0	0	0
Sign Control	Free	Free	Free	Free	Stop	Stop
RT Channelized	-	None	-	None	-	None
Storage Length	-	-	-	-	0	-
Veh in Median Storage, #	-	0	0	-	0	-
Grade, %	-	0	0	-	0	-
Peak Hour Factor	92	92	92	92	92	92
Heavy Vehicles, %	3	3	2	2	2	2
Mvmt Flow	0	391	435	0	0	0

Major/Minor	Major1		Major2		Minor2	
Conflicting Flow All	-	0	-	0	826	435
Stage 1	-	-	-	-	435	-
Stage 2	-	-	-	-	391	-
Critical Hdwy	-	-	-	-	6.42	6.22
Critical Hdwy Stg 1	-	-	-	-	5.42	-
Critical Hdwy Stg 2	-	-	-	-	5.42	-
Follow-up Hdwy	-	-	-	-	3.518	3.318
Pot Cap-1 Maneuver	0	-	-	0	342	621
Stage 1	0	-	-	0	653	-
Stage 2	0	-	-	0	683	-
Platoon blocked, %		-	-			
Mov Cap-1 Maneuver	-	-	-	-	342	621
Mov Cap-2 Maneuver	-	-	-	-	342	-
Stage 1	-	-	-	-	653	-
Stage 2	-	-	-	-	683	-

Approach	EB	WB	SB
HCM Control Delay, s	0	0	0
HCM LOS			A

Minor Lane/Major Mvmt	EBT	WBT	SBLn1
Capacity (veh/h)	-	-	-
HCM Lane V/C Ratio	-	-	-
HCM Control Delay (s)	-	-	0
HCM Lane LOS	-	-	A
HCM 95th %tile Q(veh)	-	-	-

Intersection	
Int Delay, s/veh	1.1

Movement	EBL	EBT	WBT	WBR	SBL	SBR
Lane Configurations						
Traffic Vol, veh/h	20	340	365	20	20	35
Future Vol, veh/h	20	340	365	20	20	35
Conflicting Peds, #/hr	1	0	0	1	0	0
Sign Control	Free	Free	Free	Free	Stop	Stop
RT Channelized	-	None	-	None	-	None
Storage Length	-	-	-	-	0	-
Veh in Median Storage, #	-	0	0	-	0	-
Grade, %	-	0	0	-	0	-
Peak Hour Factor	94	94	94	94	94	94
Heavy Vehicles, %	3	3	3	3	2	2
Mvmt Flow	21	362	388	21	21	37

Major/Minor	Major1		Major2		Minor2	
Conflicting Flow All	410	0	-	0	804	400
Stage 1	-	-	-	-	400	-
Stage 2	-	-	-	-	404	-
Critical Hdwy	4.13	-	-	-	6.42	6.22
Critical Hdwy Stg 1	-	-	-	-	5.42	-
Critical Hdwy Stg 2	-	-	-	-	5.42	-
Follow-up Hdwy	2.227	-	-	-	3.518	3.318
Pot Cap-1 Maneuver	1143	-	-	-	352	650
Stage 1	-	-	-	-	677	-
Stage 2	-	-	-	-	674	-
Platoon blocked, %		-	-	-		
Mov Cap-1 Maneuver	1142	-	-	-	343	649
Mov Cap-2 Maneuver	-	-	-	-	343	-
Stage 1	-	-	-	-	661	-
Stage 2	-	-	-	-	673	-

Approach	EB	WB	SB
HCM Control Delay, s	0.5	0	13.3
HCM LOS			B

Minor Lane/Major Mvmt	EBL	EBT	WBT	WBR	SBLn1
Capacity (veh/h)	1142	-	-	-	490
HCM Lane V/C Ratio	0.019	-	-	-	0.119
HCM Control Delay (s)	8.2	0	-	-	13.3
HCM Lane LOS	A	A	-	-	B
HCM 95th %tile Q(veh)	0.1	-	-	-	0.4

Intersection	
Int Delay, s/veh	0

Movement	EBL	EBT	WBT	WBR	SBL	SBR
Lane Configurations		↑	↑		⋔	
Traffic Vol, veh/h	0	360	385	0	0	0
Future Vol, veh/h	0	360	385	0	0	0
Conflicting Peds, #/hr	0	0	0	0	0	0
Sign Control	Free	Free	Free	Free	Stop	Stop
RT Channelized	-	None	-	None	-	None
Storage Length	-	-	-	-	0	-
Veh in Median Storage, #	-	0	0	-	0	-
Grade, %	-	0	0	-	0	-
Peak Hour Factor	92	92	92	92	92	92
Heavy Vehicles, %	2	2	3	3	2	2
Mvmt Flow	0	391	418	0	0	0

Major/Minor	Major1		Major2		Minor2	
Conflicting Flow All	-	0	-	0	809	418
Stage 1	-	-	-	-	418	-
Stage 2	-	-	-	-	391	-
Critical Hdwy	-	-	-	-	6.42	6.22
Critical Hdwy Stg 1	-	-	-	-	5.42	-
Critical Hdwy Stg 2	-	-	-	-	5.42	-
Follow-up Hdwy	-	-	-	-	3.518	3.318
Pot Cap-1 Maneuver	0	-	-	0	350	635
Stage 1	0	-	-	0	664	-
Stage 2	0	-	-	0	683	-
Platoon blocked, %		-	-			
Mov Cap-1 Maneuver	-	-	-	-	350	635
Mov Cap-2 Maneuver	-	-	-	-	350	-
Stage 1	-	-	-	-	664	-
Stage 2	-	-	-	-	683	-

Approach	EB	WB	SB
HCM Control Delay, s	0	0	0
HCM LOS			A

Minor Lane/Major Mvmt	EBT	WBT	SBLn1
Capacity (veh/h)	-	-	-
HCM Lane V/C Ratio	-	-	-
HCM Control Delay (s)	-	-	0
HCM Lane LOS	-	-	A
HCM 95th %tile Q(veh)	-	-	-

Intersection	
Int Delay, s/veh	0

Movement	EBT	EBR	WBL	WBT	NBL	NBR
Lane Configurations	↑			↑	⋔	
Traffic Vol, veh/h	360	0	0	385	0	0
Future Vol, veh/h	360	0	0	385	0	0
Conflicting Peds, #/hr	0	0	0	0	0	0
Sign Control	Free	Free	Free	Free	Stop	Stop
RT Channelized	-	None	-	None	-	None
Storage Length	-	-	-	-	0	-
Veh in Median Storage, #	0	-	-	0	0	-
Grade, %	0	-	-	0	0	-
Peak Hour Factor	92	92	92	92	92	92
Heavy Vehicles, %	2	2	3	3	2	2
Mvmt Flow	391	0	0	418	0	0

Major/Minor	Major1		Major2		Minor1	
Conflicting Flow All	0	-	-	-	809	391
Stage 1	-	-	-	-	391	-
Stage 2	-	-	-	-	418	-
Critical Hdwy	-	-	-	-	6.42	6.22
Critical Hdwy Stg 1	-	-	-	-	5.42	-
Critical Hdwy Stg 2	-	-	-	-	5.42	-
Follow-up Hdwy	-	-	-	-	3.518	3.318
Pot Cap-1 Maneuver	-	0	0	-	350	658
Stage 1	-	0	0	-	683	-
Stage 2	-	0	0	-	664	-
Platoon blocked, %	-			-		
Mov Cap-1 Maneuver	-	-	-	-	350	658
Mov Cap-2 Maneuver	-	-	-	-	350	-
Stage 1	-	-	-	-	683	-
Stage 2	-	-	-	-	664	-

Approach	EB	WB	NB
HCM Control Delay, s	0	0	0
HCM LOS			A

Minor Lane/Major Mvmt	NBLn1	EBT	WBT
Capacity (veh/h)	-	-	-
HCM Lane V/C Ratio	-	-	-
HCM Control Delay (s)	0	-	-
HCM Lane LOS	A	-	-
HCM 95th %tile Q(veh)	-	-	-

Intersection	
Int Delay, s/veh	5.6

Movement	EBL	EBT	EBR	WBL	WBT	WBR	NBL	NBT	NBR	SBL	SBT	SBR
Lane Configurations												
Traffic Vol, veh/h	50	240	70	20	260	40	50	25	10	55	30	75
Future Vol, veh/h	50	240	70	20	260	40	50	25	10	55	30	75
Conflicting Peds, #/hr	0	0	0	0	0	0	0	0	0	0	0	0
Sign Control	Free	Free	Free	Free	Free	Free	Stop	Stop	Stop	Stop	Stop	Stop
RT Channelized	-	-	None	-	-	None	-	-	None	-	-	None
Storage Length	175	-	-	150	-	125	-	-	-	100	-	-
Veh in Median Storage, #	-	0	-	-	0	-	-	0	-	-	0	-
Grade, %	-	0	-	-	0	-	-	0	-	-	0	-
Peak Hour Factor	92	92	92	92	92	92	92	92	92	92	92	92
Heavy Vehicles, %	2	2	2	3	3	3	2	2	2	1	1	1
Mvmt Flow	54	261	76	22	283	43	54	27	11	60	33	82

Major/Minor	Major1			Major2			Minor1			Minor2		
Conflicting Flow All	326	0	0	337	0	0	813	777	299	753	772	283
Stage 1	-	-	-	-	-	-	407	407	-	327	327	-
Stage 2	-	-	-	-	-	-	406	370	-	426	445	-
Critical Hdwy	4.12	-	-	4.13	-	-	7.12	6.52	6.22	7.11	6.51	6.21
Critical Hdwy Stg 1	-	-	-	-	-	-	6.12	5.52	-	6.11	5.51	-
Critical Hdwy Stg 2	-	-	-	-	-	-	6.12	5.52	-	6.11	5.51	-
Follow-up Hdwy	2.218	-	-	2.227	-	-	3.518	4.018	3.318	3.509	4.009	3.309
Pot Cap-1 Maneuver	1234	-	-	1217	-	-	297	328	741	327	331	758
Stage 1	-	-	-	-	-	-	621	597	-	688	650	-
Stage 2	-	-	-	-	-	-	622	620	-	608	576	-
Platoon blocked, %		-	-		-	-						
Mov Cap-1 Maneuver	1234	-	-	1217	-	-	233	308	741	287	311	758
Mov Cap-2 Maneuver	-	-	-	-	-	-	233	308	-	287	311	-
Stage 1	-	-	-	-	-	-	594	571	-	658	638	-
Stage 2	-	-	-	-	-	-	517	609	-	546	551	-

Approach	EB	WB	NB	SB
HCM Control Delay, s	1.1	0.5	24.6	16
HCM LOS			C	C

Minor Lane/Major Mvmt	NBLn1	EBL	EBT	EBR	WBL	WBT	WBR	SBLn1	SBLn2
Capacity (veh/h)	275	1234	-	-	1217	-	-	287	537
HCM Lane V/C Ratio	0.336	0.044	-	-	0.018	-	-	0.208	0.213
HCM Control Delay (s)	24.6	8.1	-	-	8	-	-	20.8	13.5
HCM Lane LOS	C	A	-	-	A	-	-	C	B
HCM 95th %tile Q(veh)	1.4	0.1	-	-	0.1	-	-	0.8	0.8

HCM 6th Signalized Intersection Summary
1: Jackson Dr & WIS-60

05/19/2020

Movement	EBL	EBT	EBR	WBL	WBT	WBR	NBL	NBT	NBR	SBL	SBT	SBR
Lane Configurations												
Traffic Volume (veh/h)	70	335	30	10	340	20	115	55	20	45	25	185
Future Volume (veh/h)	70	335	30	10	340	20	115	55	20	45	25	185
Initial Q (Qb), veh	0	0	0	0	0	0	0	0	0	0	0	0
Ped-Bike Adj(A_pbT)	1.00		1.00	1.00		1.00	1.00		0.97	1.00		0.99
Parking Bus, Adj	1.00	1.00	1.00	1.00	1.00	1.00	1.00	1.00	1.00	1.00	1.00	1.00
Work Zone On Approach		No			No			No			No	
Adj Sat Flow, veh/h/ln	1752	1554	1554	1767	1767	1767	1826	1619	1619	1856	1646	1646
Adj Flow Rate, veh/h	73	349	31	10	354	21	120	57	21	47	26	193
Peak Hour Factor	0.96	0.96	0.96	0.96	0.96	0.96	0.96	0.96	0.96	0.96	0.96	0.96
Percent Heavy Veh, %	10	10	10	9	9	9	5	5	5	3	3	3
Cap, veh/h	500	723	64	69	497	29	295	315	116	442	47	351
Arrive On Green	0.10	0.51	0.51	0.31	0.31	0.31	0.28	0.28	0.28	0.28	0.28	0.28
Sat Flow, veh/h	1668	1406	125	16	1625	95	1131	1119	412	1305	168	1246
Grp Volume(v), veh/h	73	0	380	385	0	0	120	0	78	47	0	219
Grp Sat Flow(s),veh/h/ln	1668	0	1531	1735	0	0	1131	0	1531	1305	0	1413
Q Serve(g_s), s	1.5	0.0	9.3	0.0	0.0	0.0	5.8	0.0	2.2	1.6	0.0	7.6
Cycle Q Clear(g_c), s	1.5	0.0	9.3	11.3	0.0	0.0	13.4	0.0	2.2	3.9	0.0	7.6
Prop In Lane	1.00		0.08	0.03		0.05	1.00		0.27	1.00		0.88
Lane Grp Cap(c), veh/h	500	0	787	595	0	0	295	0	432	442	0	399
V/C Ratio(X)	0.15	0.00	0.48	0.65	0.00	0.00	0.41	0.00	0.18	0.11	0.00	0.55
Avail Cap(c_a), veh/h	1063	0	2026	1403	0	0	660	0	927	864	0	856
HCM Platoon Ratio	1.00	1.00	1.00	1.00	1.00	1.00	1.00	1.00	1.00	1.00	1.00	1.00
Upstream Filter(I)	1.00	0.00	1.00	1.00	0.00	0.00	1.00	0.00	1.00	1.00	0.00	1.00
Uniform Delay (d), s/veh	9.6	0.0	9.1	17.9	0.0	0.0	23.3	0.0	15.7	17.2	0.0	17.6
Incr Delay (d2), s/veh	0.0	0.0	0.7	1.8	0.0	0.0	0.3	0.0	0.1	0.0	0.0	0.4
Initial Q Delay(d3),s/veh	0.0	0.0	0.0	0.0	0.0	0.0	0.0	0.0	0.0	0.0	0.0	0.0
%ile BackOfQ(95%),veh/ln	0.9	0.0	4.9	8.0	0.0	0.0	2.7	0.0	1.3	0.8	0.0	4.2
Unsig. Movement Delay, s/veh												
LnGrp Delay(d),s/veh	9.7	0.0	9.8	19.6	0.0	0.0	23.7	0.0	15.8	17.2	0.0	18.1
LnGrp LOS	A	A	A	B	A	A	C	A	B	B	A	B
Approach Vol, veh/h		453			385			198			266	
Approach Delay, s/veh		9.7			19.6			20.6			17.9	
Approach LOS		A			B			C			B	

Timer - Assigned Phs	1	2		4		6		8
Phs Duration (G+Y+Rc), s	12.0	23.0		22.8		35.0		22.8
Change Period (Y+Rc), s	6.5	* 5.3		6.5		* 5.3		6.5
Max Green Setting (Gmax), s	25.0	* 45		35.0		* 77		35.0
Max Q Clear Time (g_c+I1), s	3.5	13.3		15.4		11.3		9.6
Green Ext Time (p_c), s	0.1	4.1		0.4		4.4		0.8

Intersection Summary	
HCM 6th Ctrl Delay	16.0
HCM 6th LOS	B

Notes

* HCM 6th computational engine requires equal clearance times for the phases crossing the barrier.

Intersection	
Int Delay, s/veh	0.2

Movement	EBL	EBT	WBT	WBR	SBL	SBR
Lane Configurations		↑	↑		⋔	
Traffic Vol, veh/h	10	390	370	5	5	0
Future Vol, veh/h	10	390	370	5	5	0
Conflicting Peds, #/hr	0	0	0	0	0	0
Sign Control	Free	Free	Free	Free	Stop	Stop
RT Channelized	-	None	-	None	-	None
Storage Length	-	-	-	-	0	-
Veh in Median Storage, #	-	0	0	-	0	-
Grade, %	-	0	0	-	0	-
Peak Hour Factor	92	92	92	92	92	92
Heavy Vehicles, %	4	4	9	9	2	2
Mvmt Flow	11	424	402	5	5	0

Major/Minor	Major1		Major2		Minor2	
Conflicting Flow All	407	0	-	0	851	405
Stage 1	-	-	-	-	405	-
Stage 2	-	-	-	-	446	-
Critical Hdwy	4.14	-	-	-	6.42	6.22
Critical Hdwy Stg 1	-	-	-	-	5.42	-
Critical Hdwy Stg 2	-	-	-	-	5.42	-
Follow-up Hdwy	2.236	-	-	-	3.518	3.318
Pot Cap-1 Maneuver	1141	-	-	-	330	646
Stage 1	-	-	-	-	673	-
Stage 2	-	-	-	-	645	-
Platoon blocked, %		-	-	-		
Mov Cap-1 Maneuver	1141	-	-	-	326	646
Mov Cap-2 Maneuver	-	-	-	-	326	-
Stage 1	-	-	-	-	664	-
Stage 2	-	-	-	-	645	-

Approach	EB	WB	SB
HCM Control Delay, s	0.2	0	16.2
HCM LOS			C

Minor Lane/Major Mvmt	EBL	EBT	WBT	WBR	SBLn1
Capacity (veh/h)	1141	-	-	-	326
HCM Lane V/C Ratio	0.01	-	-	-	0.017
HCM Control Delay (s)	8.2	-	-	-	16.2
HCM Lane LOS	A	-	-	-	C
HCM 95th %tile Q(veh)	0	-	-	-	0.1

Intersection	
Int Delay, s/veh	3.1

Movement	EBL	EBT	WBT	WBR	SBL	SBR
Lane Configurations						
Traffic Vol, veh/h	10	385	315	15	75	60
Future Vol, veh/h	10	385	315	15	75	60
Conflicting Peds, #/hr	0	0	0	0	0	0
Sign Control	Free	Free	Free	Free	Stop	Stop
RT Channelized	-	None	-	None	-	None
Storage Length	-	-	-	-	0	-
Veh in Median Storage, #	-	0	0	-	0	-
Grade, %	-	0	0	-	0	-
Peak Hour Factor	84	84	84	84	84	84
Heavy Vehicles, %	4	4	6	6	1	1
Mvmt Flow	12	458	375	18	89	71

Major/Minor	Major1		Major2		Minor2	
Conflicting Flow All	393	0	-	0	866	384
Stage 1	-	-	-	-	384	-
Stage 2	-	-	-	-	482	-
Critical Hdwy	4.14	-	-	-	6.41	6.21
Critical Hdwy Stg 1	-	-	-	-	5.41	-
Critical Hdwy Stg 2	-	-	-	-	5.41	-
Follow-up Hdwy	2.236	-	-	-	3.509	3.309
Pot Cap-1 Maneuver	1155	-	-	-	325	666
Stage 1	-	-	-	-	691	-
Stage 2	-	-	-	-	623	-
Platoon blocked, %		-	-	-		
Mov Cap-1 Maneuver	1155	-	-	-	320	666
Mov Cap-2 Maneuver	-	-	-	-	320	-
Stage 1	-	-	-	-	681	-
Stage 2	-	-	-	-	623	-

Approach	EB	WB	SB
HCM Control Delay, s	0.2	0	19
HCM LOS			C

Minor Lane/Major Mvmt	EBL	EBT	WBT	WBR	SBLn1
Capacity (veh/h)	1155	-	-	-	416
HCM Lane V/C Ratio	0.01	-	-	-	0.386
HCM Control Delay (s)	8.1	0	-	-	19
HCM Lane LOS	A	A	-	-	C
HCM 95th %tile Q(veh)	0	-	-	-	1.8

Intersection	
Int Delay, s/veh	0

Movement	EBL	EBT	WBT	WBR	SBL	SBR
Lane Configurations		↑	↑		⋔	
Traffic Vol, veh/h	0	460	330	0	0	0
Future Vol, veh/h	0	460	330	0	0	0
Conflicting Peds, #/hr	0	0	0	0	0	0
Sign Control	Free	Free	Free	Free	Stop	Stop
RT Channelized	-	None	-	None	-	None
Storage Length	-	-	-	-	0	-
Veh in Median Storage, #	-	0	0	-	0	-
Grade, %	-	0	0	-	0	-
Peak Hour Factor	92	92	92	92	92	92
Heavy Vehicles, %	6	6	6	6	2	2
Mvmt Flow	0	500	359	0	0	0

Major/Minor	Major1		Major2		Minor2	
Conflicting Flow All	-	0	-	0	859	359
Stage 1	-	-	-	-	359	-
Stage 2	-	-	-	-	500	-
Critical Hdwy	-	-	-	-	6.42	6.22
Critical Hdwy Stg 1	-	-	-	-	5.42	-
Critical Hdwy Stg 2	-	-	-	-	5.42	-
Follow-up Hdwy	-	-	-	-	3.518	3.318
Pot Cap-1 Maneuver	0	-	-	0	327	685
Stage 1	0	-	-	0	707	-
Stage 2	0	-	-	0	609	-
Platoon blocked, %		-	-			
Mov Cap-1 Maneuver	-	-	-	-	327	685
Mov Cap-2 Maneuver	-	-	-	-	327	-
Stage 1	-	-	-	-	707	-
Stage 2	-	-	-	-	609	-

Approach	EB	WB	SB
HCM Control Delay, s	0	0	0
HCM LOS			A

Minor Lane/Major Mvmt	EBT	WBT	SBLn1
Capacity (veh/h)	-	-	-
HCM Lane V/C Ratio	-	-	-
HCM Control Delay (s)	-	-	0
HCM Lane LOS	-	-	A
HCM 95th %tile Q(veh)	-	-	-

Intersection	
Int Delay, s/veh	0

Movement	EBT	EBR	WBL	WBT	NBL	NBR
Lane Configurations	↑			↑	⋔	
Traffic Vol, veh/h	460	0	0	330	0	0
Future Vol, veh/h	460	0	0	330	0	0
Conflicting Peds, #/hr	0	0	0	0	0	0
Sign Control	Free	Free	Free	Free	Stop	Stop
RT Channelized	-	None	-	None	-	None
Storage Length	-	-	-	-	0	-
Veh in Median Storage, #	0	-	-	0	0	-
Grade, %	0	-	-	0	0	-
Peak Hour Factor	92	92	92	92	92	92
Heavy Vehicles, %	6	6	6	6	2	2
Mvmt Flow	500	0	0	359	0	0

Major/Minor	Major1		Major2		Minor1	
Conflicting Flow All	0	-	-	-	859	500
Stage 1	-	-	-	-	500	-
Stage 2	-	-	-	-	359	-
Critical Hdwy	-	-	-	-	6.42	6.22
Critical Hdwy Stg 1	-	-	-	-	5.42	-
Critical Hdwy Stg 2	-	-	-	-	5.42	-
Follow-up Hdwy	-	-	-	-	3.518	3.318
Pot Cap-1 Maneuver	-	0	0	-	327	571
Stage 1	-	0	0	-	609	-
Stage 2	-	0	0	-	707	-
Platoon blocked, %	-			-		
Mov Cap-1 Maneuver	-	-	-	-	327	571
Mov Cap-2 Maneuver	-	-	-	-	327	-
Stage 1	-	-	-	-	609	-
Stage 2	-	-	-	-	707	-

Approach	EB	WB	NB
HCM Control Delay, s	0	0	0
HCM LOS			A

Minor Lane/Major Mvmt	NBLn1	EBT	WBT
Capacity (veh/h)	-	-	-
HCM Lane V/C Ratio	-	-	-
HCM Control Delay (s)	0	-	-
HCM Lane LOS	A	-	-
HCM 95th %tile Q(veh)	-	-	-

Intersection	
Int Delay, s/veh	7

Movement	EBL	EBT	EBR	WBL	WBT	WBR	NBL	NBT	NBR	SBL	SBT	SBR
Lane Configurations												
Traffic Vol, veh/h	75	350	35	15	235	90	25	20	25	80	15	70
Future Vol, veh/h	75	350	35	15	235	90	25	20	25	80	15	70
Conflicting Peds, #/hr	0	0	1	1	0	0	0	0	0	0	0	0
Sign Control	Free	Free	Free	Free	Free	Free	Stop	Stop	Stop	Stop	Stop	Stop
RT Channelized	-	-	None	-	-	None	-	-	None	-	-	None
Storage Length	175	-	-	150	-	125	-	-	-	100	-	-
Veh in Median Storage, #	-	0	-	-	0	-	-	0	-	-	0	-
Grade, %	-	0	-	-	0	-	-	0	-	-	0	-
Peak Hour Factor	84	84	84	84	84	84	84	84	84	84	84	84
Heavy Vehicles, %	6	6	6	4	4	4	7	7	7	6	6	6
Mvmt Flow	89	417	42	18	280	107	30	24	30	95	18	83

Major/Minor	Major1			Major2			Minor1			Minor2		
Conflicting Flow All	387	0	0	460	0	0	1037	1040	439	959	954	280
Stage 1	-	-	-	-	-	-	617	617	-	316	316	-
Stage 2	-	-	-	-	-	-	420	423	-	643	638	-
Critical Hdwy	4.16	-	-	4.14	-	-	7.17	6.57	6.27	7.16	6.56	6.26
Critical Hdwy Stg 1	-	-	-	-	-	-	6.17	5.57	-	6.16	5.56	-
Critical Hdwy Stg 2	-	-	-	-	-	-	6.17	5.57	-	6.16	5.56	-
Follow-up Hdwy	2.254	-	-	2.236	-	-	3.563	4.063	3.363	3.554	4.054	3.354
Pot Cap-1 Maneuver	1150	-	-	1091	-	-	205	226	607	233	255	749
Stage 1	-	-	-	-	-	-	469	474	-	687	648	-
Stage 2	-	-	-	-	-	-	601	579	-	455	465	-
Platoon blocked, %		-	-		-	-						
Mov Cap-1 Maneuver	1150	-	-	1090	-	-	159	205	606	188	231	749
Mov Cap-2 Maneuver	-	-	-	-	-	-	159	205	-	188	231	-
Stage 1	-	-	-	-	-	-	432	437	-	634	637	-
Stage 2	-	-	-	-	-	-	511	569	-	377	429	-

Approach	EB	WB	NB	SB
HCM Control Delay, s	1.4	0.4	28.4	27.4
HCM LOS			D	D

Minor Lane/Major Mvmt	NBLn1	EBL	EBT	EBR	WBL	WBT	WBR	SBLn1	SBLn2
Capacity (veh/h)	236	1150	-	-	1090	-	-	188	537
HCM Lane V/C Ratio	0.353	0.078	-	-	0.016	-	-	0.507	0.188
HCM Control Delay (s)	28.4	8.4	-	-	8.4	-	-	42.3	13.3
HCM Lane LOS	D	A	-	-	A	-	-	E	B
HCM 95th %tile Q(veh)	1.5	0.3	-	-	0.1	-	-	2.5	0.7

HCM 6th Signalized Intersection Summary
1: Jackson Dr & WIS-60

05/19/2020

Movement	EBL	EBT	EBR	WBL	WBT	WBR	NBL	NBT	NBR	SBL	SBT	SBR
Lane Configurations												
Traffic Volume (veh/h)	180	410	125	15	325	50	75	80	15	40	65	105
Future Volume (veh/h)	180	410	125	15	325	50	75	80	15	40	65	105
Initial Q (Qb), veh	0	0	0	0	0	0	0	0	0	0	0	0
Ped-Bike Adj(A_pbT)	1.00		0.98	1.00		0.98	0.99		0.99	0.99		0.97
Parking Bus, Adj	1.00	1.00	1.00	1.00	1.00	1.00	1.00	1.00	1.00	1.00	1.00	1.00
Work Zone On Approach		No			No			No			No	
Adj Sat Flow, veh/h/ln	1856	1646	1646	1841	1841	1841	1856	1646	1646	1885	1672	1672
Adj Flow Rate, veh/h	194	441	134	16	349	54	81	86	16	43	70	113
Peak Hour Factor	0.93	0.93	0.93	0.93	0.93	0.93	0.93	0.93	0.93	0.93	0.93	0.93
Percent Heavy Veh, %	3	3	3	4	4	4	3	3	3	1	1	1
Cap, veh/h	591	683	207	73	486	73	267	309	57	353	129	209
Arrive On Green	0.13	0.57	0.57	0.32	0.32	0.32	0.23	0.23	0.23	0.23	0.23	0.23
Sat Flow, veh/h	1767	1204	366	27	1506	227	1185	1347	251	1294	564	911
Grp Volume(v), veh/h	194	0	575	419	0	0	81	0	102	43	0	183
Grp Sat Flow(s),veh/h/ln	1767	0	1570	1760	0	0	1185	0	1598	1294	0	1475
Q Serve(g_s), s	3.6	0.0	14.5	1.1	0.0	0.0	3.7	0.0	3.0	1.6	0.0	6.3
Cycle Q Clear(g_c), s	3.6	0.0	14.5	12.0	0.0	0.0	10.1	0.0	3.0	4.7	0.0	6.3
Prop In Lane	1.00		0.23	0.04		0.13	1.00		0.16	1.00		0.62
Lane Grp Cap(c), veh/h	591	0	890	633	0	0	267	0	367	353	0	338
V/C Ratio(X)	0.33	0.00	0.65	0.66	0.00	0.00	0.30	0.00	0.28	0.12	0.00	0.54
Avail Cap(c_a), veh/h	1121	0	2074	1411	0	0	711	0	965	838	0	891
HCM Platoon Ratio	1.00	1.00	1.00	1.00	1.00	1.00	1.00	1.00	1.00	1.00	1.00	1.00
Upstream Filter(I)	1.00	0.00	1.00	1.00	0.00	0.00	1.00	0.00	1.00	1.00	0.00	1.00
Uniform Delay (d), s/veh	8.5	0.0	8.6	17.3	0.0	0.0	24.1	0.0	18.4	20.3	0.0	19.6
Incr Delay (d2), s/veh	0.1	0.0	1.2	1.8	0.0	0.0	0.2	0.0	0.2	0.1	0.0	0.5
Initial Q Delay(d3),s/veh	0.0	0.0	0.0	0.0	0.0	0.0	0.0	0.0	0.0	0.0	0.0	0.0
%ile BackOfQ(95%),veh/ln	2.2	0.0	7.5	8.4	0.0	0.0	1.8	0.0	1.9	0.9	0.0	3.7
Unsig. Movement Delay, s/veh												
LnGrp Delay(d),s/veh	8.6	0.0	9.7	19.1	0.0	0.0	24.3	0.0	18.5	20.4	0.0	20.1
LnGrp LOS	A	A	A	B	A	A	C	A	B	C	A	C
Approach Vol, veh/h		769			419			183			226	
Approach Delay, s/veh		9.5			19.1			21.1			20.2	
Approach LOS		A			B			C			C	

Timer - Assigned Phs	1	2		4		6		8
Phs Duration (G+Y+Rc), s	14.1	24.0		19.8		38.1		19.8
Change Period (Y+Rc), s	6.5	* 5.3		6.5		* 5.3		6.5
Max Green Setting (Gmax), s	25.0	* 45		35.0		* 77		35.0
Max Q Clear Time (g_c+I1), s	5.6	14.0		12.1		16.5		8.3
Green Ext Time (p_c), s	0.2	4.6		0.4		7.7		0.6

Intersection Summary	
HCM 6th Ctrl Delay	14.8
HCM 6th LOS	B

Notes

* HCM 6th computational engine requires equal clearance times for the phases crossing the barrier.

Intersection	
Int Delay, s/veh	0.3

Movement	EBL	EBT	WBT	WBR	SBL	SBR
Lane Configurations		↑	↑		⋔	
Traffic Vol, veh/h	5	460	385	0	10	5
Future Vol, veh/h	5	460	385	0	10	5
Conflicting Peds, #/hr	0	0	0	0	0	0
Sign Control	Free	Free	Free	Free	Stop	Stop
RT Channelized	-	None	-	None	-	None
Storage Length	-	-	-	-	0	-
Veh in Median Storage, #	-	0	0	-	0	-
Grade, %	-	0	0	-	0	-
Peak Hour Factor	92	92	92	92	92	92
Heavy Vehicles, %	3	3	4	4	2	2
Mvmt Flow	5	500	418	0	11	5

Major/Minor	Major1		Major2		Minor2	
Conflicting Flow All	418	0	-	0	928	418
Stage 1	-	-	-	-	418	-
Stage 2	-	-	-	-	510	-
Critical Hdwy	4.13	-	-	-	6.42	6.22
Critical Hdwy Stg 1	-	-	-	-	5.42	-
Critical Hdwy Stg 2	-	-	-	-	5.42	-
Follow-up Hdwy	2.227	-	-	-	3.518	3.318
Pot Cap-1 Maneuver	1136	-	-	0	297	635
Stage 1	-	-	-	0	664	-
Stage 2	-	-	-	0	603	-
Platoon blocked, %		-	-			
Mov Cap-1 Maneuver	1136	-	-	-	295	635
Mov Cap-2 Maneuver	-	-	-	-	295	-
Stage 1	-	-	-	-	660	-
Stage 2	-	-	-	-	603	-

Approach	EB	WB	SB
HCM Control Delay, s	0.1	0	15.5
HCM LOS			C

Minor Lane/Major Mvmt	EBL	EBT	WBT	SBLn1
Capacity (veh/h)	1136	-	-	359
HCM Lane V/C Ratio	0.005	-	-	0.045
HCM Control Delay (s)	8.2	-	-	15.5
HCM Lane LOS	A	-	-	C
HCM 95th %tile Q(veh)	0	-	-	0.1

Intersection	
Int Delay, s/veh	1.1

Movement	EBL	EBT	WBT	WBR	SBL	SBR
Lane Configurations						
Traffic Vol, veh/h	50	420	375	45	20	10
Future Vol, veh/h	50	420	375	45	20	10
Conflicting Peds, #/hr	1	0	0	1	0	0
Sign Control	Free	Free	Free	Free	Stop	Stop
RT Channelized	-	None	-	None	-	None
Storage Length	-	-	-	-	0	-
Veh in Median Storage, #	-	0	0	-	0	-
Grade, %	-	0	0	-	0	-
Peak Hour Factor	87	87	87	87	87	87
Heavy Vehicles, %	3	3	4	4	1	1
Mvmt Flow	57	483	431	52	23	11

Major/Minor	Major1		Major2		Minor2	
Conflicting Flow All	484	0	-	0	1055	458
Stage 1	-	-	-	-	458	-
Stage 2	-	-	-	-	597	-
Critical Hdwy	4.13	-	-	-	6.41	6.21
Critical Hdwy Stg 1	-	-	-	-	5.41	-
Critical Hdwy Stg 2	-	-	-	-	5.41	-
Follow-up Hdwy	2.227	-	-	-	3.509	3.309
Pot Cap-1 Maneuver	1074	-	-	-	251	605
Stage 1	-	-	-	-	639	-
Stage 2	-	-	-	-	552	-
Platoon blocked, %		-	-	-		
Mov Cap-1 Maneuver	1073	-	-	-	232	604
Mov Cap-2 Maneuver	-	-	-	-	232	-
Stage 1	-	-	-	-	592	-
Stage 2	-	-	-	-	551	-

Approach	EB	WB	SB
HCM Control Delay, s	0.9	0	19
HCM LOS			C

Minor Lane/Major Mvmt	EBL	EBT	WBT	WBR	SBLn1
Capacity (veh/h)	1073	-	-	-	292
HCM Lane V/C Ratio	0.054	-	-	-	0.118
HCM Control Delay (s)	8.5	0	-	-	19
HCM Lane LOS	A	A	-	-	C
HCM 95th %tile Q(veh)	0.2	-	-	-	0.4

Intersection	
Int Delay, s/veh	0

Movement	EBL	EBT	WBT	WBR	SBL	SBR
Lane Configurations		↑	↑		⋔	
Traffic Vol, veh/h	0	440	420	0	0	0
Future Vol, veh/h	0	440	420	0	0	0
Conflicting Peds, #/hr	0	0	0	0	0	0
Sign Control	Free	Free	Free	Free	Stop	Stop
RT Channelized	-	None	-	None	-	None
Storage Length	-	-	-	-	0	-
Veh in Median Storage, #	-	0	0	-	0	-
Grade, %	-	0	0	-	0	-
Peak Hour Factor	92	92	92	92	92	92
Heavy Vehicles, %	2	2	4	4	2	2
Mvmt Flow	0	478	457	0	0	0

Major/Minor	Major1		Major2		Minor2	
Conflicting Flow All	-	0	-	0	935	457
Stage 1	-	-	-	-	457	-
Stage 2	-	-	-	-	478	-
Critical Hdwy	-	-	-	-	6.42	6.22
Critical Hdwy Stg 1	-	-	-	-	5.42	-
Critical Hdwy Stg 2	-	-	-	-	5.42	-
Follow-up Hdwy	-	-	-	-	3.518	3.318
Pot Cap-1 Maneuver	0	-	-	0	295	604
Stage 1	0	-	-	0	638	-
Stage 2	0	-	-	0	624	-
Platoon blocked, %		-	-			
Mov Cap-1 Maneuver	-	-	-	-	295	604
Mov Cap-2 Maneuver	-	-	-	-	295	-
Stage 1	-	-	-	-	638	-
Stage 2	-	-	-	-	624	-

Approach	EB	WB	SB
HCM Control Delay, s	0	0	0
HCM LOS			A

Minor Lane/Major Mvmt	EBT	WBT	SBLn1
Capacity (veh/h)	-	-	-
HCM Lane V/C Ratio	-	-	-
HCM Control Delay (s)	-	-	0
HCM Lane LOS	-	-	A
HCM 95th %tile Q(veh)	-	-	-

Intersection	
Int Delay, s/veh	0

Movement	EBT	EBR	WBL	WBT	NBL	NBR
Lane Configurations	↑			↑	⋔	
Traffic Vol, veh/h	440	0	0	420	0	0
Future Vol, veh/h	440	0	0	420	0	0
Conflicting Peds, #/hr	0	0	0	0	0	0
Sign Control	Free	Free	Free	Free	Stop	Stop
RT Channelized	-	None	-	None	-	None
Storage Length	-	-	-	-	0	-
Veh in Median Storage, #	0	-	-	0	0	-
Grade, %	0	-	-	0	0	-
Peak Hour Factor	92	92	92	92	92	92
Heavy Vehicles, %	2	2	4	4	2	2
Mvmt Flow	478	0	0	457	0	0

Major/Minor	Major1		Major2		Minor1	
Conflicting Flow All	0	-	-	-	935	478
Stage 1	-	-	-	-	478	-
Stage 2	-	-	-	-	457	-
Critical Hdwy	-	-	-	-	6.42	6.22
Critical Hdwy Stg 1	-	-	-	-	5.42	-
Critical Hdwy Stg 2	-	-	-	-	5.42	-
Follow-up Hdwy	-	-	-	-	3.518	3.318
Pot Cap-1 Maneuver	-	0	0	-	295	587
Stage 1	-	0	0	-	624	-
Stage 2	-	0	0	-	638	-
Platoon blocked, %	-			-		
Mov Cap-1 Maneuver	-	-	-	-	295	587
Mov Cap-2 Maneuver	-	-	-	-	295	-
Stage 1	-	-	-	-	624	-
Stage 2	-	-	-	-	638	-

Approach	EB	WB	NB
HCM Control Delay, s	0	0	0
HCM LOS			A

Minor Lane/Major Mvmt	NBLn1	EBT	WBT
Capacity (veh/h)	-	-	-
HCM Lane V/C Ratio	-	-	-
HCM Control Delay (s)	0	-	-
HCM Lane LOS	A	-	-
HCM 95th %tile Q(veh)	-	-	-

Intersection	
Int Delay, s/veh	13

Movement	EBL	EBT	EBR	WBL	WBT	WBR	NBL	NBT	NBR	SBL	SBT	SBR
Lane Configurations												
Traffic Vol, veh/h	55	280	105	35	315	85	50	45	20	60	35	55
Future Vol, veh/h	55	280	105	35	315	85	50	45	20	60	35	55
Conflicting Peds, #/hr	0	0	0	0	0	0	0	0	0	0	0	0
Sign Control	Free	Free	Free	Free	Free	Free	Stop	Stop	Stop	Stop	Stop	Stop
RT Channelized	-	-	None	-	-	None	-	-	None	-	-	None
Storage Length	175	-	-	150	-	125	-	-	-	100	-	-
Veh in Median Storage, #	-	0	-	-	0	-	-	0	-	-	0	-
Grade, %	-	0	-	-	0	-	-	0	-	-	0	-
Peak Hour Factor	82	82	82	82	82	82	82	82	82	82	82	82
Heavy Vehicles, %	2	2	2	2	2	2	1	1	1	1	1	1
Mvmt Flow	67	341	128	43	384	104	61	55	24	73	43	67

Major/Minor	Major1			Major2			Minor1			Minor2		
Conflicting Flow All	488	0	0	469	0	0	1116	1113	405	1049	1073	384
Stage 1	-	-	-	-	-	-	539	539	-	470	470	-
Stage 2	-	-	-	-	-	-	577	574	-	579	603	-
Critical Hdwy	4.12	-	-	4.12	-	-	7.11	6.51	6.21	7.11	6.51	6.21
Critical Hdwy Stg 1	-	-	-	-	-	-	6.11	5.51	-	6.11	5.51	-
Critical Hdwy Stg 2	-	-	-	-	-	-	6.11	5.51	-	6.11	5.51	-
Follow-up Hdwy	2.218	-	-	2.218	-	-	3.509	4.009	3.309	3.509	4.009	3.309
Pot Cap-1 Maneuver	1075	-	-	1093	-	-	186	209	648	206	221	666
Stage 1	-	-	-	-	-	-	528	523	-	576	562	-
Stage 2	-	-	-	-	-	-	504	505	-	503	490	-
Platoon blocked, %		-	-		-	-						
Mov Cap-1 Maneuver	1075	-	-	1093	-	-	129	188	648	142	199	666
Mov Cap-2 Maneuver	-	-	-	-	-	-	129	188	-	142	199	-
Stage 1	-	-	-	-	-	-	495	491	-	540	540	-
Stage 2	-	-	-	-	-	-	401	485	-	403	460	-

Approach	EB	WB	NB	SB
HCM Control Delay, s	1.1	0.7	77.9	33.8
HCM LOS			F	D

Minor Lane/Major Mvmt	NBLn1	EBL	EBT	EBR	WBL	WBT	WBR	SBLn1	SBLn2
Capacity (veh/h)	175	1075	-	-	1093	-	-	142	348
HCM Lane V/C Ratio	0.801	0.062	-	-	0.039	-	-	0.515	0.315
HCM Control Delay (s)	77.9	8.6	-	-	8.4	-	-	54.6	20
HCM Lane LOS	F	A	-	-	A	-	-	F	C
HCM 95th %tile Q(veh)	5.4	0.2	-	-	0.1	-	-	2.5	1.3

HCM 6th Signalized Intersection Summary
1: Jackson Dr & WIS-60

05/19/2020

Movement	EBL	EBT	EBR	WBL	WBT	WBR	NBL	NBT	NBR	SBL	SBT	SBR
Lane Configurations												
Traffic Volume (veh/h)	65	320	85	15	350	35	95	45	15	25	35	80
Future Volume (veh/h)	65	320	85	15	350	35	95	45	15	25	35	80
Initial Q (Qb), veh	0	0	0	0	0	0	0	0	0	0	0	0
Ped-Bike Adj(A_pbT)	1.00		1.00	1.00		1.00	1.00		1.00	1.00		1.00
Parking Bus, Adj	1.00	1.00	1.00	1.00	1.00	1.00	1.00	1.00	1.00	1.00	1.00	1.00
Work Zone On Approach		No			No			No			No	
Adj Sat Flow, veh/h/ln	1870	1659	1659	1870	1870	1870	1885	1672	1672	1870	1659	1659
Adj Flow Rate, veh/h	66	327	87	15	357	36	97	46	15	26	36	82
Peak Hour Factor	0.98	0.98	0.98	0.98	0.98	0.98	0.98	0.98	0.98	0.98	0.98	0.98
Percent Heavy Veh, %	2	2	2	2	2	2	1	1	1	2	2	2
Cap, veh/h	598	704	187	85	536	53	315	242	79	374	90	206
Arrive On Green	0.10	0.56	0.56	0.33	0.33	0.33	0.20	0.20	0.20	0.20	0.20	0.20
Sat Flow, veh/h	1781	1262	336	26	1630	160	1284	1207	394	1341	450	1025
Grp Volume(v), veh/h	66	0	414	408	0	0	97	0	61	26	0	118
Grp Sat Flow(s),veh/h/ln	1781	0	1597	1817	0	0	1284	0	1601	1341	0	1474
Q Serve(g_s), s	1.0	0.0	7.6	0.0	0.0	0.0	3.5	0.0	1.6	0.8	0.0	3.4
Cycle Q Clear(g_c), s	1.0	0.0	7.6	9.4	0.0	0.0	6.9	0.0	1.6	2.4	0.0	3.4
Prop In Lane	1.00		0.21	0.04		0.09	1.00		0.25	1.00		0.69
Lane Grp Cap(c), veh/h	598	0	892	674	0	0	315	0	321	374	0	296
V/C Ratio(X)	0.11	0.00	0.46	0.61	0.00	0.00	0.31	0.00	0.19	0.07	0.00	0.40
Avail Cap(c_a), veh/h	1335	0	2494	1723	0	0	975	0	1144	1063	0	1053
HCM Platoon Ratio	1.00	1.00	1.00	1.00	1.00	1.00	1.00	1.00	1.00	1.00	1.00	1.00
Upstream Filter(I)	1.00	0.00	1.00	1.00	0.00	0.00	1.00	0.00	1.00	1.00	0.00	1.00
Uniform Delay (d), s/veh	7.2	0.0	6.4	14.2	0.0	0.0	20.0	0.0	16.3	17.2	0.0	17.0
Incr Delay (d2), s/veh	0.0	0.0	0.6	1.3	0.0	0.0	0.2	0.0	0.1	0.0	0.0	0.3
Initial Q Delay(d3),s/veh	0.0	0.0	0.0	0.0	0.0	0.0	0.0	0.0	0.0	0.0	0.0	0.0
%ile BackOfQ(95%),veh/ln	0.6	0.0	3.6	6.5	0.0	0.0	1.8	0.0	1.0	0.4	0.0	1.9
Unsig. Movement Delay, s/veh												
LnGrp Delay(d),s/veh	7.3	0.0	7.0	15.5	0.0	0.0	20.2	0.0	16.4	17.3	0.0	17.3
LnGrp LOS	A	A	A	B	A	A	C	A	B	B	A	B
Approach Vol, veh/h		480			408			158			144	
Approach Delay, s/veh		7.0			15.5			18.7			17.3	
Approach LOS		A			B			B			B	

Timer - Assigned Phs	1	2		4		6		8
Phs Duration (G+Y+Rc), s	11.2	21.4		16.3		32.7		16.3
Change Period (Y+Rc), s	6.5	* 5.3		6.5		* 5.3		6.5
Max Green Setting (Gmax), s	25.0	* 45		35.0		* 77		35.0
Max Q Clear Time (g_c+I1), s	3.0	11.4		8.9		9.6		5.4
Green Ext Time (p_c), s	0.0	4.5		0.3		4.9		0.4

Intersection Summary	
HCM 6th Ctrl Delay	12.7
HCM 6th LOS	B

Notes

* HCM 6th computational engine requires equal clearance times for the phases crossing the barrier.

Intersection	
Int Delay, s/veh	0

Movement	EBL	EBT	WBT	WBR	SBL	SBR
Lane Configurations		↑	↑		⋔	
Traffic Vol, veh/h	0	360	400	0	0	0
Future Vol, veh/h	0	360	400	0	0	0
Conflicting Peds, #/hr	0	0	0	0	0	0
Sign Control	Free	Free	Free	Free	Stop	Stop
RT Channelized	-	None	-	None	-	None
Storage Length	-	-	-	-	0	-
Veh in Median Storage, #	-	0	0	-	0	-
Grade, %	-	0	0	-	0	-
Peak Hour Factor	92	92	92	92	92	92
Heavy Vehicles, %	3	3	2	2	2	2
Mvmt Flow	0	391	435	0	0	0

Major/Minor	Major1		Major2		Minor2	
Conflicting Flow All	-	0	-	0	826	435
Stage 1	-	-	-	-	435	-
Stage 2	-	-	-	-	391	-
Critical Hdwy	-	-	-	-	6.42	6.22
Critical Hdwy Stg 1	-	-	-	-	5.42	-
Critical Hdwy Stg 2	-	-	-	-	5.42	-
Follow-up Hdwy	-	-	-	-	3.518	3.318
Pot Cap-1 Maneuver	0	-	-	0	342	621
Stage 1	0	-	-	0	653	-
Stage 2	0	-	-	0	683	-
Platoon blocked, %		-	-			
Mov Cap-1 Maneuver	-	-	-	-	342	621
Mov Cap-2 Maneuver	-	-	-	-	342	-
Stage 1	-	-	-	-	653	-
Stage 2	-	-	-	-	683	-

Approach	EB	WB	SB
HCM Control Delay, s	0	0	0
HCM LOS			A

Minor Lane/Major Mvmt	EBT	WBT	SBLn1
Capacity (veh/h)	-	-	-
HCM Lane V/C Ratio	-	-	-
HCM Control Delay (s)	-	-	0
HCM Lane LOS	-	-	A
HCM 95th %tile Q(veh)	-	-	-

Intersection	
Int Delay, s/veh	1.1

Movement	EBL	EBT	WBT	WBR	SBL	SBR
Lane Configurations						
Traffic Vol, veh/h	20	340	365	20	20	35
Future Vol, veh/h	20	340	365	20	20	35
Conflicting Peds, #/hr	1	0	0	1	0	0
Sign Control	Free	Free	Free	Free	Stop	Stop
RT Channelized	-	None	-	None	-	None
Storage Length	-	-	-	-	0	-
Veh in Median Storage, #	-	0	0	-	0	-
Grade, %	-	0	0	-	0	-
Peak Hour Factor	94	94	94	94	94	94
Heavy Vehicles, %	3	3	3	3	2	2
Mvmt Flow	21	362	388	21	21	37

Major/Minor	Major1		Major2		Minor2	
Conflicting Flow All	410	0	-	0	804	400
Stage 1	-	-	-	-	400	-
Stage 2	-	-	-	-	404	-
Critical Hdwy	4.13	-	-	-	6.42	6.22
Critical Hdwy Stg 1	-	-	-	-	5.42	-
Critical Hdwy Stg 2	-	-	-	-	5.42	-
Follow-up Hdwy	2.227	-	-	-	3.518	3.318
Pot Cap-1 Maneuver	1143	-	-	-	352	650
Stage 1	-	-	-	-	677	-
Stage 2	-	-	-	-	674	-
Platoon blocked, %		-	-	-		
Mov Cap-1 Maneuver	1142	-	-	-	343	649
Mov Cap-2 Maneuver	-	-	-	-	343	-
Stage 1	-	-	-	-	661	-
Stage 2	-	-	-	-	673	-

Approach	EB	WB	SB
HCM Control Delay, s	0.5	0	13.3
HCM LOS			B

Minor Lane/Major Mvmt	EBL	EBT	WBT	WBR	SBLn1
Capacity (veh/h)	1142	-	-	-	490
HCM Lane V/C Ratio	0.019	-	-	-	0.119
HCM Control Delay (s)	8.2	0	-	-	13.3
HCM Lane LOS	A	A	-	-	B
HCM 95th %tile Q(veh)	0.1	-	-	-	0.4

Intersection	
Int Delay, s/veh	0

Movement	EBL	EBT	WBT	WBR	SBL	SBR
Lane Configurations		↑	↑		⋔	
Traffic Vol, veh/h	0	360	385	0	0	0
Future Vol, veh/h	0	360	385	0	0	0
Conflicting Peds, #/hr	0	0	0	0	0	0
Sign Control	Free	Free	Free	Free	Stop	Stop
RT Channelized	-	None	-	None	-	None
Storage Length	-	-	-	-	0	-
Veh in Median Storage, #	-	0	0	-	0	-
Grade, %	-	0	0	-	0	-
Peak Hour Factor	92	92	92	92	92	92
Heavy Vehicles, %	2	2	3	3	2	2
Mvmt Flow	0	391	418	0	0	0

Major/Minor	Major1		Major2		Minor2	
Conflicting Flow All	-	0	-	0	809	418
Stage 1	-	-	-	-	418	-
Stage 2	-	-	-	-	391	-
Critical Hdwy	-	-	-	-	6.42	6.22
Critical Hdwy Stg 1	-	-	-	-	5.42	-
Critical Hdwy Stg 2	-	-	-	-	5.42	-
Follow-up Hdwy	-	-	-	-	3.518	3.318
Pot Cap-1 Maneuver	0	-	-	0	350	635
Stage 1	0	-	-	0	664	-
Stage 2	0	-	-	0	683	-
Platoon blocked, %		-	-			
Mov Cap-1 Maneuver	-	-	-	-	350	635
Mov Cap-2 Maneuver	-	-	-	-	350	-
Stage 1	-	-	-	-	664	-
Stage 2	-	-	-	-	683	-

Approach	EB	WB	SB
HCM Control Delay, s	0	0	0
HCM LOS			A

Minor Lane/Major Mvmt	EBT	WBT	SBLn1
Capacity (veh/h)	-	-	-
HCM Lane V/C Ratio	-	-	-
HCM Control Delay (s)	-	-	0
HCM Lane LOS	-	-	A
HCM 95th %tile Q(veh)	-	-	-

Intersection	
Int Delay, s/veh	0

Movement	EBT	EBR	WBL	WBT	NBL	NBR
Lane Configurations	↑			↑	⋔	
Traffic Vol, veh/h	360	0	0	385	0	0
Future Vol, veh/h	360	0	0	385	0	0
Conflicting Peds, #/hr	0	0	0	0	0	0
Sign Control	Free	Free	Free	Free	Stop	Stop
RT Channelized	-	None	-	None	-	None
Storage Length	-	-	-	-	0	-
Veh in Median Storage, #	0	-	-	0	0	-
Grade, %	0	-	-	0	0	-
Peak Hour Factor	92	92	92	92	92	92
Heavy Vehicles, %	2	2	3	3	2	2
Mvmt Flow	391	0	0	418	0	0

Major/Minor	Major1		Major2		Minor1	
Conflicting Flow All	0	-	-	-	809	391
Stage 1	-	-	-	-	391	-
Stage 2	-	-	-	-	418	-
Critical Hdwy	-	-	-	-	6.42	6.22
Critical Hdwy Stg 1	-	-	-	-	5.42	-
Critical Hdwy Stg 2	-	-	-	-	5.42	-
Follow-up Hdwy	-	-	-	-	3.518	3.318
Pot Cap-1 Maneuver	-	0	0	-	350	658
Stage 1	-	0	0	-	683	-
Stage 2	-	0	0	-	664	-
Platoon blocked, %	-			-		
Mov Cap-1 Maneuver	-	-	-	-	350	658
Mov Cap-2 Maneuver	-	-	-	-	350	-
Stage 1	-	-	-	-	683	-
Stage 2	-	-	-	-	664	-

Approach	EB	WB	NB
HCM Control Delay, s	0	0	0
HCM LOS			A

Minor Lane/Major Mvmt	NBLn1	EBT	WBT
Capacity (veh/h)	-	-	-
HCM Lane V/C Ratio	-	-	-
HCM Control Delay (s)	0	-	-
HCM Lane LOS	A	-	-
HCM 95th %tile Q(veh)	-	-	-

Intersection	
Int Delay, s/veh	5.9

Movement	EBL	EBT	EBR	WBL	WBT	WBR	NBL	NBT	NBR	SBL	SBT	SBR
Lane Configurations												
Traffic Vol, veh/h	50	240	70	20	260	40	50	30	10	60	30	75
Future Vol, veh/h	50	240	70	20	260	40	50	30	10	60	30	75
Conflicting Peds, #/hr	0	0	0	0	0	0	0	0	0	0	0	0
Sign Control	Free	Free	Free	Free	Free	Free	Stop	Stop	Stop	Stop	Stop	Stop
RT Channelized	-	-	None	-	-	None	-	-	None	-	-	None
Storage Length	175	-	-	150	-	125	-	-	-	100	-	-
Veh in Median Storage, #	-	0	-	-	0	-	-	0	-	-	0	-
Grade, %	-	0	-	-	0	-	-	0	-	-	0	-
Peak Hour Factor	92	92	92	92	92	92	92	92	92	92	92	92
Heavy Vehicles, %	2	2	2	3	3	3	2	2	2	1	1	1
Mvmt Flow	54	261	76	22	283	43	54	33	11	65	33	82

Major/Minor	Major1			Major2			Minor1			Minor2		
Conflicting Flow All	326	0	0	337	0	0	813	777	299	756	772	283
Stage 1	-	-	-	-	-	-	407	407	-	327	327	-
Stage 2	-	-	-	-	-	-	406	370	-	429	445	-
Critical Hdwy	4.12	-	-	4.13	-	-	7.12	6.52	6.22	7.11	6.51	6.21
Critical Hdwy Stg 1	-	-	-	-	-	-	6.12	5.52	-	6.11	5.51	-
Critical Hdwy Stg 2	-	-	-	-	-	-	6.12	5.52	-	6.11	5.51	-
Follow-up Hdwy	2.218	-	-	2.227	-	-	3.518	4.018	3.318	3.509	4.009	3.309
Pot Cap-1 Maneuver	1234	-	-	1217	-	-	297	328	741	326	331	758
Stage 1	-	-	-	-	-	-	621	597	-	688	650	-
Stage 2	-	-	-	-	-	-	622	620	-	606	576	-
Platoon blocked, %		-	-		-	-						
Mov Cap-1 Maneuver	1234	-	-	1217	-	-	233	308	741	282	311	758
Mov Cap-2 Maneuver	-	-	-	-	-	-	233	308	-	282	311	-
Stage 1	-	-	-	-	-	-	594	571	-	658	638	-
Stage 2	-	-	-	-	-	-	517	609	-	538	551	-

Approach	EB	WB	NB	SB
HCM Control Delay, s	1.1	0.5	24.9	16.4
HCM LOS			C	C

Minor Lane/Major Mvmt	NBLn1	EBL	EBT	EBR	WBL	WBT	WBR	SBLn1	SBLn2
Capacity (veh/h)	277	1234	-	-	1217	-	-	282	537
HCM Lane V/C Ratio	0.353	0.044	-	-	0.018	-	-	0.231	0.213
HCM Control Delay (s)	24.9	8.1	-	-	8	-	-	21.6	13.5
HCM Lane LOS	C	A	-	-	A	-	-	C	B
HCM 95th %tile Q(veh)	1.5	0.1	-	-	0.1	-	-	0.9	0.8

Appendix C: Existing Transportation System with Build Traffic Operations Analysis

Base Year Build - Capacity analysis inputs/outputs
Interim Year Build - Capacity analysis inputs/outputs
Horizon Year Build Alt 1 - Capacity analysis inputs/outputs
Horizon Year Build Alt 2 - Capacity analysis inputs/outputs

HCM 6th Signalized Intersection Summary
1: Jackson Dr & WIS-60

05/19/2020

Movement	EBL	EBT	EBR	WBL	WBT	WBR	NBL	NBT	NBR	SBL	SBT	SBR
Lane Configurations												
Traffic Volume (veh/h)	70	345	30	10	340	20	110	50	25	50	25	180
Future Volume (veh/h)	70	345	30	10	340	20	110	50	25	50	25	180
Initial Q (Qb), veh	0	0	0	0	0	0	0	0	0	0	0	0
Ped-Bike Adj(A_pbT)	1.00		1.00	1.00		1.00	1.00		0.97	1.00		0.99
Parking Bus, Adj	1.00	1.00	1.00	1.00	1.00	1.00	1.00	1.00	1.00	1.00	1.00	1.00
Work Zone On Approach		No			No			No			No	
Adj Sat Flow, veh/h/ln	1752	1554	1554	1767	1767	1767	1826	1619	1619	1856	1646	1646
Adj Flow Rate, veh/h	73	359	31	10	354	21	115	52	26	52	26	188
Peak Hour Factor	0.96	0.96	0.96	0.96	0.96	0.96	0.96	0.96	0.96	0.96	0.96	0.96
Percent Heavy Veh, %	10	10	10	9	9	9	5	5	5	3	3	3
Cap, veh/h	506	729	63	70	499	29	293	278	139	434	47	342
Arrive On Green	0.10	0.52	0.52	0.31	0.31	0.31	0.28	0.28	0.28	0.28	0.28	0.28
Sat Flow, veh/h	1668	1410	122	16	1625	95	1136	1008	504	1305	172	1242
Grp Volume(v), veh/h	73	0	390	385	0	0	115	0	78	52	0	214
Grp Sat Flow(s),veh/h/ln	1668	0	1531	1735	0	0	1136	0	1511	1305	0	1414
Q Serve(g_s), s	1.5	0.0	9.4	0.0	0.0	0.0	5.5	0.0	2.2	1.8	0.0	7.4
Cycle Q Clear(g_c), s	1.5	0.0	9.4	11.2	0.0	0.0	12.8	0.0	2.2	4.1	0.0	7.4
Prop In Lane	1.00		0.08	0.03		0.05	1.00		0.33	1.00		0.88
Lane Grp Cap(c), veh/h	506	0	792	598	0	0	293	0	417	434	0	390
V/C Ratio(X)	0.14	0.00	0.49	0.64	0.00	0.00	0.39	0.00	0.19	0.12	0.00	0.55
Avail Cap(c_a), veh/h	1077	0	2054	1422	0	0	677	0	928	875	0	868
HCM Platoon Ratio	1.00	1.00	1.00	1.00	1.00	1.00	1.00	1.00	1.00	1.00	1.00	1.00
Upstream Filter(I)	1.00	0.00	1.00	1.00	0.00	0.00	1.00	0.00	1.00	1.00	0.00	1.00
Uniform Delay (d), s/veh	9.4	0.0	8.9	17.5	0.0	0.0	23.1	0.0	15.8	17.3	0.0	17.6
Incr Delay (d2), s/veh	0.0	0.0	0.7	1.7	0.0	0.0	0.3	0.0	0.1	0.0	0.0	0.4
Initial Q Delay(d3),s/veh	0.0	0.0	0.0	0.0	0.0	0.0	0.0	0.0	0.0	0.0	0.0	0.0
%ile BackOfQ(95%),veh/ln	0.9	0.0	5.0	7.8	0.0	0.0	2.5	0.0	1.3	0.9	0.0	4.1
Unsig. Movement Delay, s/veh												
LnGrp Delay(d),s/veh	9.4	0.0	9.6	19.3	0.0	0.0	23.4	0.0	15.9	17.4	0.0	18.1
LnGrp LOS	A	A	A	B	A	A	C	A	B	B	A	B
Approach Vol, veh/h		463			385			193			266	
Approach Delay, s/veh		9.6			19.3			20.4			17.9	
Approach LOS		A			B			C			B	

Timer - Assigned Phs	1	2		4		6		8
Phs Duration (G+Y+Rc), s	12.0	22.8		22.2		34.8		22.2
Change Period (Y+Rc), s	6.5	* 5.3		6.5		* 5.3		6.5
Max Green Setting (Gmax), s	25.0	* 45		35.0		* 77		35.0
Max Q Clear Time (g_c+I1), s	3.5	13.2		14.8		11.4		9.4
Green Ext Time (p_c), s	0.1	4.1		0.4		4.5		0.8

Intersection Summary	
HCM 6th Ctrl Delay	15.7
HCM 6th LOS	B

Notes

* HCM 6th computational engine requires equal clearance times for the phases crossing the barrier.

Intersection	
Int Delay, s/veh	0.2

Movement	EBL	EBT	WBT	WBR	SBL	SBR
Lane Configurations		↑	↑		⋔	
Traffic Vol, veh/h	10	410	370	5	5	0
Future Vol, veh/h	10	410	370	5	5	0
Conflicting Peds, #/hr	0	0	0	0	0	0
Sign Control	Free	Free	Free	Free	Stop	Stop
RT Channelized	-	None	-	None	-	None
Storage Length	-	-	-	-	0	-
Veh in Median Storage, #	-	0	0	-	0	-
Grade, %	-	0	0	-	0	-
Peak Hour Factor	92	92	92	92	92	92
Heavy Vehicles, %	4	4	9	9	2	2
Mvmt Flow	11	446	402	5	5	0

Major/Minor	Major1		Major2		Minor2	
Conflicting Flow All	407	0	-	0	873	405
Stage 1	-	-	-	-	405	-
Stage 2	-	-	-	-	468	-
Critical Hdwy	4.14	-	-	-	6.42	6.22
Critical Hdwy Stg 1	-	-	-	-	5.42	-
Critical Hdwy Stg 2	-	-	-	-	5.42	-
Follow-up Hdwy	2.236	-	-	-	3.518	3.318
Pot Cap-1 Maneuver	1141	-	-	-	321	646
Stage 1	-	-	-	-	673	-
Stage 2	-	-	-	-	630	-
Platoon blocked, %		-	-	-		
Mov Cap-1 Maneuver	1141	-	-	-	317	646
Mov Cap-2 Maneuver	-	-	-	-	317	-
Stage 1	-	-	-	-	664	-
Stage 2	-	-	-	-	630	-

Approach	EB	WB	SB
HCM Control Delay, s	0.2	0	16.6
HCM LOS			C

Minor Lane/Major Mvmt	EBL	EBT	WBT	WBR	SBLn1
Capacity (veh/h)	1141	-	-	-	317
HCM Lane V/C Ratio	0.01	-	-	-	0.017
HCM Control Delay (s)	8.2	-	-	-	16.6
HCM Lane LOS	A	-	-	-	C
HCM 95th %tile Q(veh)	0	-	-	-	0.1

Intersection	
Int Delay, s/veh	3.6

Movement	EBL	EBT	EBR	WBL	WBT	WBR	NBL	NBT	NBR	SBL	SBT	SBR
Lane Configurations												
Traffic Vol, veh/h	10	380	25	5	310	15	5	0	5	70	0	60
Future Vol, veh/h	10	380	25	5	310	15	5	0	5	70	0	60
Conflicting Peds, #/hr	0	0	0	0	0	0	0	0	0	0	0	0
Sign Control	Free	Free	Free	Free	Free	Free	Stop	Stop	Stop	Stop	Stop	Stop
RT Channelized	-	-	None	-	-	None	-	-	None	-	-	None
Storage Length	-	-	-	-	-	-	-	-	-	-	-	-
Veh in Median Storage, #	-	0	-	-	0	-	-	0	-	-	0	-
Grade, %	-	0	-	-	0	-	-	0	-	-	0	-
Peak Hour Factor	84	84	84	84	84	84	84	84	84	84	84	84
Heavy Vehicles, %	4	4	4	6	6	6	2	2	2	1	1	1
Mvmt Flow	12	452	30	6	369	18	6	0	6	83	0	71

Major/Minor	Major1			Major2			Minor1			Minor2		
Conflicting Flow All	387	0	0	482	0	0	917	890	467	884	896	378
Stage 1	-	-	-	-	-	-	491	491	-	390	390	-
Stage 2	-	-	-	-	-	-	426	399	-	494	506	-
Critical Hdwy	4.14	-	-	4.16	-	-	7.12	6.52	6.22	7.11	6.51	6.21
Critical Hdwy Stg 1	-	-	-	-	-	-	6.12	5.52	-	6.11	5.51	-
Critical Hdwy Stg 2	-	-	-	-	-	-	6.12	5.52	-	6.11	5.51	-
Follow-up Hdwy	2.236	-	-	2.254	-	-	3.518	4.018	3.318	3.509	4.009	3.309
Pot Cap-1 Maneuver	1161	-	-	1060	-	-	253	282	596	267	281	671
Stage 1	-	-	-	-	-	-	559	548	-	636	609	-
Stage 2	-	-	-	-	-	-	606	602	-	559	541	-
Platoon blocked, %		-	-		-	-						
Mov Cap-1 Maneuver	1161	-	-	1060	-	-	222	276	596	260	275	671
Mov Cap-2 Maneuver	-	-	-	-	-	-	222	276	-	260	275	-
Stage 1	-	-	-	-	-	-	551	540	-	627	605	-
Stage 2	-	-	-	-	-	-	538	598	-	546	533	-

Approach	EB	WB	NB	SB
HCM Control Delay, s	0.2	0.1	16.5	22.2
HCM LOS			C	C

Minor Lane/Major Mvmt	NBLn1	EBL	EBT	EBR	WBL	WBT	WBR	SBLn1
Capacity (veh/h)	324	1161	-	-	1060	-	-	362
HCM Lane V/C Ratio	0.037	0.01	-	-	0.006	-	-	0.428
HCM Control Delay (s)	16.5	8.1	0	-	8.4	0	-	22.2
HCM Lane LOS	C	A	A	-	A	A	-	C
HCM 95th %tile Q(veh)	0.1	0	-	-	0	-	-	2.1

Intersection	
Int Delay, s/veh	0

Movement	EBL	EBT	WBT	WBR	SBL	SBR
Lane Configurations		↑	↑		⋔	
Traffic Vol, veh/h	0	455	330	0	0	0
Future Vol, veh/h	0	455	330	0	0	0
Conflicting Peds, #/hr	0	0	0	0	0	0
Sign Control	Free	Free	Free	Free	Stop	Stop
RT Channelized	-	None	-	None	-	None
Storage Length	-	-	-	-	0	-
Veh in Median Storage, #	-	0	0	-	0	-
Grade, %	-	0	0	-	0	-
Peak Hour Factor	92	92	92	92	92	92
Heavy Vehicles, %	6	6	6	6	2	2
Mvmt Flow	0	495	359	0	0	0

Major/Minor	Major1		Major2		Minor2	
Conflicting Flow All	-	0	-	0	854	359
Stage 1	-	-	-	-	359	-
Stage 2	-	-	-	-	495	-
Critical Hdwy	-	-	-	-	6.42	6.22
Critical Hdwy Stg 1	-	-	-	-	5.42	-
Critical Hdwy Stg 2	-	-	-	-	5.42	-
Follow-up Hdwy	-	-	-	-	3.518	3.318
Pot Cap-1 Maneuver	0	-	-	0	329	685
Stage 1	0	-	-	0	707	-
Stage 2	0	-	-	0	613	-
Platoon blocked, %		-	-			
Mov Cap-1 Maneuver	-	-	-	-	329	685
Mov Cap-2 Maneuver	-	-	-	-	329	-
Stage 1	-	-	-	-	707	-
Stage 2	-	-	-	-	613	-

Approach	EB	WB	SB
HCM Control Delay, s	0	0	0
HCM LOS			A

Minor Lane/Major Mvmt	EBT	WBT	SBLn1
Capacity (veh/h)	-	-	-
HCM Lane V/C Ratio	-	-	-
HCM Control Delay (s)	-	-	0
HCM Lane LOS	-	-	A
HCM 95th %tile Q(veh)	-	-	-

Intersection	
Int Delay, s/veh	0

Movement	EBT	EBR	WBL	WBT	NBL	NBR
Lane Configurations	↑			↑	⋔	
Traffic Vol, veh/h	455	0	0	330	0	0
Future Vol, veh/h	455	0	0	330	0	0
Conflicting Peds, #/hr	0	0	0	0	0	0
Sign Control	Free	Free	Free	Free	Stop	Stop
RT Channelized	-	None	-	None	-	None
Storage Length	-	-	-	-	0	-
Veh in Median Storage, #	0	-	-	0	0	-
Grade, %	0	-	-	0	0	-
Peak Hour Factor	92	92	92	92	92	92
Heavy Vehicles, %	6	6	6	6	2	2
Mvmt Flow	495	0	0	359	0	0

Major/Minor	Major1		Major2		Minor1	
Conflicting Flow All	0	-	-	-	854	495
Stage 1	-	-	-	-	495	-
Stage 2	-	-	-	-	359	-
Critical Hdwy	-	-	-	-	6.42	6.22
Critical Hdwy Stg 1	-	-	-	-	5.42	-
Critical Hdwy Stg 2	-	-	-	-	5.42	-
Follow-up Hdwy	-	-	-	-	3.518	3.318
Pot Cap-1 Maneuver	-	0	0	-	329	575
Stage 1	-	0	0	-	613	-
Stage 2	-	0	0	-	707	-
Platoon blocked, %	-			-		
Mov Cap-1 Maneuver	-	-	-	-	329	575
Mov Cap-2 Maneuver	-	-	-	-	329	-
Stage 1	-	-	-	-	613	-
Stage 2	-	-	-	-	707	-

Approach	EB	WB	NB
HCM Control Delay, s	0	0	0
HCM LOS			A

Minor Lane/Major Mvmt	NBLn1	EBT	WBT
Capacity (veh/h)	-	-	-
HCM Lane V/C Ratio	-	-	-
HCM Control Delay (s)	0	-	-
HCM Lane LOS	A	-	-
HCM 95th %tile Q(veh)	-	-	-

Intersection	
Int Delay, s/veh	6.8

Movement	EBL	EBT	EBR	WBL	WBT	WBR	NBL	NBT	NBR	SBL	SBT	SBR
Lane Configurations												
Traffic Vol, veh/h	70	350	35	15	240	85	25	20	25	80	15	65
Future Vol, veh/h	70	350	35	15	240	85	25	20	25	80	15	65
Conflicting Peds, #/hr	0	0	1	1	0	0	0	0	0	0	0	0
Sign Control	Free	Free	Free	Free	Free	Free	Stop	Stop	Stop	Stop	Stop	Stop
RT Channelized	-	-	None	-	-	None	-	-	None	-	-	None
Storage Length	175	-	-	150	-	125	-	-	-	100	-	-
Veh in Median Storage, #	-	0	-	-	0	-	-	0	-	-	0	-
Grade, %	-	0	-	-	0	-	-	0	-	-	0	-
Peak Hour Factor	84	84	84	84	84	84	84	84	84	84	84	84
Heavy Vehicles, %	6	6	6	4	4	4	7	7	7	6	6	6
Mvmt Flow	83	417	42	18	286	101	30	24	30	95	18	77

Major/Minor	Major1			Major2			Minor1			Minor2		
Conflicting Flow All	387	0	0	460	0	0	1025	1028	439	953	948	286
Stage 1	-	-	-	-	-	-	605	605	-	322	322	-
Stage 2	-	-	-	-	-	-	420	423	-	631	626	-
Critical Hdwy	4.16	-	-	4.14	-	-	7.17	6.57	6.27	7.16	6.56	6.26
Critical Hdwy Stg 1	-	-	-	-	-	-	6.17	5.57	-	6.16	5.56	-
Critical Hdwy Stg 2	-	-	-	-	-	-	6.17	5.57	-	6.16	5.56	-
Follow-up Hdwy	2.254	-	-	2.236	-	-	3.563	4.063	3.363	3.554	4.054	3.354
Pot Cap-1 Maneuver	1150	-	-	1091	-	-	209	229	607	235	257	744
Stage 1	-	-	-	-	-	-	476	480	-	682	644	-
Stage 2	-	-	-	-	-	-	601	579	-	462	471	-
Platoon blocked, %		-	-		-	-						
Mov Cap-1 Maneuver	1150	-	-	1090	-	-	164	209	606	191	234	744
Mov Cap-2 Maneuver	-	-	-	-	-	-	164	209	-	191	234	-
Stage 1	-	-	-	-	-	-	441	445	-	633	633	-
Stage 2	-	-	-	-	-	-	515	569	-	386	437	-

Approach	EB	WB	NB	SB
HCM Control Delay, s	1.3	0.4	27.5	27.3
HCM LOS			D	D

Minor Lane/Major Mvmt	NBLn1	EBL	EBT	EBR	WBL	WBT	WBR	SBLn1	SBLn2
Capacity (veh/h)	242	1150	-	-	1090	-	-	191	528
HCM Lane V/C Ratio	0.344	0.072	-	-	0.016	-	-	0.499	0.18
HCM Control Delay (s)	27.5	8.4	-	-	8.4	-	-	41.3	13.3
HCM Lane LOS	D	A	-	-	A	-	-	E	B
HCM 95th %tile Q(veh)	1.5	0.2	-	-	0.1	-	-	2.5	0.7

HCM 6th Signalized Intersection Summary
1: Jackson Dr & WIS-60

05/19/2020

Movement	EBL	EBT	EBR	WBL	WBT	WBR	NBL	NBT	NBR	SBL	SBT	SBR
Lane Configurations												
Traffic Volume (veh/h)	175	405	120	15	330	55	70	75	15	40	60	105
Future Volume (veh/h)	175	405	120	15	330	55	70	75	15	40	60	105
Initial Q (Qb), veh	0	0	0	0	0	0	0	0	0	0	0	0
Ped-Bike Adj(A_pbT)	1.00		0.98	1.00		0.98	0.99		0.99	0.99		0.97
Parking Bus, Adj	1.00	1.00	1.00	1.00	1.00	1.00	1.00	1.00	1.00	1.00	1.00	1.00
Work Zone On Approach		No			No			No			No	
Adj Sat Flow, veh/h/ln	1856	1646	1646	1841	1841	1841	1856	1646	1646	1885	1672	1672
Adj Flow Rate, veh/h	188	435	129	16	355	59	75	81	16	43	65	113
Peak Hour Factor	0.93	0.93	0.93	0.93	0.93	0.93	0.93	0.93	0.93	0.93	0.93	0.93
Percent Heavy Veh, %	3	3	3	4	4	4	3	3	3	1	1	1
Cap, veh/h	592	696	206	73	492	80	261	296	59	348	119	207
Arrive On Green	0.13	0.57	0.57	0.33	0.33	0.33	0.22	0.22	0.22	0.22	0.22	0.22
Sat Flow, veh/h	1767	1212	359	26	1491	241	1190	1332	263	1300	537	933
Grp Volume(v), veh/h	188	0	564	430	0	0	75	0	97	43	0	178
Grp Sat Flow(s),veh/h/ln	1767	0	1572	1759	0	0	1190	0	1595	1300	0	1469
Q Serve(g_s), s	3.5	0.0	13.8	1.1	0.0	0.0	3.4	0.0	2.9	1.6	0.0	6.2
Cycle Q Clear(g_c), s	3.5	0.0	13.8	12.3	0.0	0.0	9.7	0.0	2.9	4.6	0.0	6.2
Prop In Lane	1.00		0.23	0.04		0.14	1.00		0.16	1.00		0.63
Lane Grp Cap(c), veh/h	592	0	902	645	0	0	261	0	355	348	0	327
V/C Ratio(X)	0.32	0.00	0.63	0.67	0.00	0.00	0.29	0.00	0.27	0.12	0.00	0.54
Avail Cap(c_a), veh/h	1122	0	2076	1412	0	0	716	0	964	844	0	888
HCM Platoon Ratio	1.00	1.00	1.00	1.00	1.00	1.00	1.00	1.00	1.00	1.00	1.00	1.00
Upstream Filter(I)	1.00	0.00	1.00	1.00	0.00	0.00	1.00	0.00	1.00	1.00	0.00	1.00
Uniform Delay (d), s/veh	8.2	0.0	8.2	17.1	0.0	0.0	24.2	0.0	18.6	20.5	0.0	19.9
Incr Delay (d2), s/veh	0.1	0.0	1.1	1.8	0.0	0.0	0.2	0.0	0.2	0.1	0.0	0.5
Initial Q Delay(d3),s/veh	0.0	0.0	0.0	0.0	0.0	0.0	0.0	0.0	0.0	0.0	0.0	0.0
%ile BackOfQ(95%),veh/ln	2.1	0.0	7.1	8.5	0.0	0.0	1.7	0.0	1.9	0.9	0.0	3.7
Unsig. Movement Delay, s/veh												
LnGrp Delay(d),s/veh	8.3	0.0	9.3	18.9	0.0	0.0	24.4	0.0	18.8	20.6	0.0	20.4
LnGrp LOS	A	A	A	B	A	A	C	A	B	C	A	C
Approach Vol, veh/h		752			430			172			221	
Approach Delay, s/veh		9.0			18.9			21.2			20.5	
Approach LOS		A			B			C			C	

Timer - Assigned Phs	1	2		4		6		8				
Phs Duration (G+Y+Rc), s	14.1	24.4		19.4		38.5		19.4				
Change Period (Y+Rc), s	6.5	* 5.3		6.5		* 5.3		6.5				
Max Green Setting (Gmax), s	25.0	* 45		35.0		* 77		35.0				
Max Q Clear Time (g_c+I1), s	5.5	14.3		11.7		15.8		8.2				
Green Ext Time (p_c), s	0.2	4.7		0.4		7.5		0.6				

Intersection Summary												
HCM 6th Ctrl Delay			14.7									
HCM 6th LOS			B									

Notes

* HCM 6th computational engine requires equal clearance times for the phases crossing the barrier.

Intersection	
Int Delay, s/veh	0.3

Movement	EBL	EBT	WBT	WBR	SBL	SBR
Lane Configurations		↑	↑		⋔	
Traffic Vol, veh/h	5	455	395	0	10	5
Future Vol, veh/h	5	455	395	0	10	5
Conflicting Peds, #/hr	0	0	0	0	0	0
Sign Control	Free	Free	Free	Free	Stop	Stop
RT Channelized	-	None	-	None	-	None
Storage Length	-	-	-	-	0	-
Veh in Median Storage, #	-	0	0	-	0	-
Grade, %	-	0	0	-	0	-
Peak Hour Factor	92	92	92	92	92	92
Heavy Vehicles, %	3	3	4	4	2	2
Mvmt Flow	5	495	429	0	11	5

Major/Minor	Major1		Major2		Minor2	
Conflicting Flow All	429	0	-	0	934	429
Stage 1	-	-	-	-	429	-
Stage 2	-	-	-	-	505	-
Critical Hdwy	4.13	-	-	-	6.42	6.22
Critical Hdwy Stg 1	-	-	-	-	5.42	-
Critical Hdwy Stg 2	-	-	-	-	5.42	-
Follow-up Hdwy	2.227	-	-	-	3.518	3.318
Pot Cap-1 Maneuver	1125	-	-	0	295	626
Stage 1	-	-	-	0	657	-
Stage 2	-	-	-	0	606	-
Platoon blocked, %		-	-			
Mov Cap-1 Maneuver	1125	-	-	-	293	626
Mov Cap-2 Maneuver	-	-	-	-	293	-
Stage 1	-	-	-	-	653	-
Stage 2	-	-	-	-	606	-

Approach	EB	WB	SB
HCM Control Delay, s	0.1	0	15.6
HCM LOS			C

Minor Lane/Major Mvmt	EBL	EBT	WBT	SBLn1
Capacity (veh/h)	1125	-	-	356
HCM Lane V/C Ratio	0.005	-	-	0.046
HCM Control Delay (s)	8.2	-	-	15.6
HCM Lane LOS	A	-	-	C
HCM 95th %tile Q(veh)	0	-	-	0.1

Intersection	
Int Delay, s/veh	1.6

Movement	EBL	EBT	EBR	WBL	WBT	WBR	NBL	NBT	NBR	SBL	SBT	SBR
Lane Configurations												
Traffic Vol, veh/h	50	410	5	0	370	45	15	0	5	20	0	10
Future Vol, veh/h	50	410	5	0	370	45	15	0	5	20	0	10
Conflicting Peds, #/hr	1	0	0	0	0	1	0	0	0	0	0	0
Sign Control	Free	Free	Free	Free	Free	Free	Stop	Stop	Stop	Stop	Stop	Stop
RT Channelized	-	-	None	-	-	None	-	-	None	-	-	None
Storage Length	-	-	-	-	-	-	-	-	-	-	-	-
Veh in Median Storage, #	-	0	-	-	0	-	-	0	-	-	0	-
Grade, %	-	0	-	-	0	-	-	0	-	-	0	-
Peak Hour Factor	87	87	87	87	87	87	87	87	87	87	87	87
Heavy Vehicles, %	3	3	3	4	4	4	2	2	2	1	1	1
Mvmt Flow	57	471	6	0	425	52	17	0	6	23	0	11

Major/Minor	Major1			Major2			Minor1			Minor2		
Conflicting Flow All	478	0	0	477	0	0	1045	1066	474	1043	1043	452
Stage 1	-	-	-	-	-	-	588	588	-	452	452	-
Stage 2	-	-	-	-	-	-	457	478	-	591	591	-
Critical Hdwy	4.13	-	-	4.14	-	-	7.12	6.52	6.22	7.11	6.51	6.21
Critical Hdwy Stg 1	-	-	-	-	-	-	6.12	5.52	-	6.11	5.51	-
Critical Hdwy Stg 2	-	-	-	-	-	-	6.12	5.52	-	6.11	5.51	-
Follow-up Hdwy	2.227	-	-	2.236	-	-	3.518	4.018	3.318	3.509	4.009	3.309
Pot Cap-1 Maneuver	1079	-	-	1075	-	-	207	222	590	208	230	610
Stage 1	-	-	-	-	-	-	495	496	-	589	572	-
Stage 2	-	-	-	-	-	-	583	556	-	495	496	-
Platoon blocked, %		-	-		-	-						
Mov Cap-1 Maneuver	1078	-	-	1075	-	-	192	206	590	194	213	609
Mov Cap-2 Maneuver	-	-	-	-	-	-	192	206	-	194	213	-
Stage 1	-	-	-	-	-	-	459	460	-	546	571	-
Stage 2	-	-	-	-	-	-	572	555	-	455	460	-

Approach	EB	WB	NB	SB
HCM Control Delay, s	0.9	0	22.3	21.6
HCM LOS			C	C

Minor Lane/Major Mvmt	NBLn1	EBL	EBT	EBR	WBL	WBT	WBR	SBLn1
Capacity (veh/h)	231	1078	-	-	1075	-	-	251
HCM Lane V/C Ratio	0.1	0.053	-	-	-	-	-	0.137
HCM Control Delay (s)	22.3	8.5	0	-	0	-	-	21.6
HCM Lane LOS	C	A	A	-	A	-	-	C
HCM 95th %tile Q(veh)	0.3	0.2	-	-	0	-	-	0.5

Intersection	
Int Delay, s/veh	0

Movement	EBL	EBT	WBT	WBR	SBL	SBR
Lane Configurations		↑	↑		⋔	
Traffic Vol, veh/h	0	435	415	0	0	0
Future Vol, veh/h	0	435	415	0	0	0
Conflicting Peds, #/hr	0	0	0	0	0	0
Sign Control	Free	Free	Free	Free	Stop	Stop
RT Channelized	-	None	-	None	-	None
Storage Length	-	-	-	-	0	-
Veh in Median Storage, #	-	0	0	-	0	-
Grade, %	-	0	0	-	0	-
Peak Hour Factor	92	92	92	92	92	92
Heavy Vehicles, %	2	2	4	4	2	2
Mvmt Flow	0	473	451	0	0	0

Major/Minor	Major1		Major2		Minor2	
Conflicting Flow All	-	0	-	0	924	451
Stage 1	-	-	-	-	451	-
Stage 2	-	-	-	-	473	-
Critical Hdwy	-	-	-	-	6.42	6.22
Critical Hdwy Stg 1	-	-	-	-	5.42	-
Critical Hdwy Stg 2	-	-	-	-	5.42	-
Follow-up Hdwy	-	-	-	-	3.518	3.318
Pot Cap-1 Maneuver	0	-	-	0	299	608
Stage 1	0	-	-	0	642	-
Stage 2	0	-	-	0	627	-
Platoon blocked, %		-	-			
Mov Cap-1 Maneuver	-	-	-	-	299	608
Mov Cap-2 Maneuver	-	-	-	-	299	-
Stage 1	-	-	-	-	642	-
Stage 2	-	-	-	-	627	-

Approach	EB	WB	SB
HCM Control Delay, s	0	0	0
HCM LOS			A

Minor Lane/Major Mvmt	EBT	WBT	SBLn1
Capacity (veh/h)	-	-	-
HCM Lane V/C Ratio	-	-	-
HCM Control Delay (s)	-	-	0
HCM Lane LOS	-	-	A
HCM 95th %tile Q(veh)	-	-	-

Intersection	
Int Delay, s/veh	0

Movement	EBT	EBR	WBL	WBT	NBL	NBR
Lane Configurations	↑			↑	⋔	
Traffic Vol, veh/h	435	0	0	415	0	0
Future Vol, veh/h	435	0	0	415	0	0
Conflicting Peds, #/hr	0	0	0	0	0	0
Sign Control	Free	Free	Free	Free	Stop	Stop
RT Channelized	-	None	-	None	-	None
Storage Length	-	-	-	-	0	-
Veh in Median Storage, #	0	-	-	0	0	-
Grade, %	0	-	-	0	0	-
Peak Hour Factor	92	92	92	92	92	92
Heavy Vehicles, %	2	2	4	4	2	2
Mvmt Flow	473	0	0	451	0	0

Major/Minor	Major1		Major2		Minor1	
Conflicting Flow All	0	-	-	-	924	473
Stage 1	-	-	-	-	473	-
Stage 2	-	-	-	-	451	-
Critical Hdwy	-	-	-	-	6.42	6.22
Critical Hdwy Stg 1	-	-	-	-	5.42	-
Critical Hdwy Stg 2	-	-	-	-	5.42	-
Follow-up Hdwy	-	-	-	-	3.518	3.318
Pot Cap-1 Maneuver	-	0	0	-	299	591
Stage 1	-	0	0	-	627	-
Stage 2	-	0	0	-	642	-
Platoon blocked, %	-			-		
Mov Cap-1 Maneuver	-	-	-	-	299	591
Mov Cap-2 Maneuver	-	-	-	-	299	-
Stage 1	-	-	-	-	627	-
Stage 2	-	-	-	-	642	-

Approach	EB	WB	NB
HCM Control Delay, s	0	0	0
HCM LOS			A

Minor Lane/Major Mvmt	NBLn1	EBT	WBT
Capacity (veh/h)	-	-	-
HCM Lane V/C Ratio	-	-	-
HCM Control Delay (s)	0	-	-
HCM Lane LOS	A	-	-
HCM 95th %tile Q(veh)	-	-	-

Intersection	
Int Delay, s/veh	11.4

Movement	EBL	EBT	EBR	WBL	WBT	WBR	NBL	NBT	NBR	SBL	SBT	SBR
Lane Configurations												
Traffic Vol, veh/h	55	280	100	35	310	80	50	40	20	55	35	55
Future Vol, veh/h	55	280	100	35	310	80	50	40	20	55	35	55
Conflicting Peds, #/hr	0	0	0	0	0	0	0	0	0	0	0	0
Sign Control	Free	Free	Free	Free	Free	Free	Stop	Stop	Stop	Stop	Stop	Stop
RT Channelized	-	-	None	-	-	None	-	-	None	-	-	None
Storage Length	175	-	-	150	-	125	-	-	-	100	-	-
Veh in Median Storage, #	-	0	-	-	0	-	-	0	-	-	0	-
Grade, %	-	0	-	-	0	-	-	0	-	-	0	-
Peak Hour Factor	82	82	82	82	82	82	82	82	82	82	82	82
Heavy Vehicles, %	2	2	2	2	2	2	1	1	1	1	1	1
Mvmt Flow	67	341	122	43	378	98	61	49	24	67	43	67

Major/Minor	Major1			Major2			Minor1			Minor2		
Conflicting Flow All	476	0	0	463	0	0	1104	1098	402	1037	1061	378
Stage 1	-	-	-	-	-	-	536	536	-	464	464	-
Stage 2	-	-	-	-	-	-	568	562	-	573	597	-
Critical Hdwy	4.12	-	-	4.12	-	-	7.11	6.51	6.21	7.11	6.51	6.21
Critical Hdwy Stg 1	-	-	-	-	-	-	6.11	5.51	-	6.11	5.51	-
Critical Hdwy Stg 2	-	-	-	-	-	-	6.11	5.51	-	6.11	5.51	-
Follow-up Hdwy	2.218	-	-	2.218	-	-	3.509	4.009	3.309	3.509	4.009	3.309
Pot Cap-1 Maneuver	1086	-	-	1098	-	-	189	214	650	210	225	671
Stage 1	-	-	-	-	-	-	530	525	-	580	565	-
Stage 2	-	-	-	-	-	-	509	511	-	506	493	-
Platoon blocked, %		-	-		-	-						
Mov Cap-1 Maneuver	1086	-	-	1098	-	-	132	193	650	151	203	671
Mov Cap-2 Maneuver	-	-	-	-	-	-	132	193	-	151	203	-
Stage 1	-	-	-	-	-	-	497	492	-	544	543	-
Stage 2	-	-	-	-	-	-	406	491	-	412	462	-

Approach	EB	WB	NB	SB
HCM Control Delay, s	1.1	0.7	69.5	29.9
HCM LOS			F	D

Minor Lane/Major Mvmt	NBLn1	EBL	EBT	EBR	WBL	WBT	WBR	SBLn1	SBLn2
Capacity (veh/h)	178	1086	-	-	1098	-	-	151	354
HCM Lane V/C Ratio	0.754	0.062	-	-	0.039	-	-	0.444	0.31
HCM Control Delay (s)	69.5	8.5	-	-	8.4	-	-	46.6	19.7
HCM Lane LOS	F	A	-	-	A	-	-	E	C
HCM 95th %tile Q(veh)	4.9	0.2	-	-	0.1	-	-	2	1.3

HCM 6th Signalized Intersection Summary
1: Jackson Dr & WIS-60

05/19/2020

Movement	EBL	EBT	EBR	WBL	WBT	WBR	NBL	NBT	NBR	SBL	SBT	SBR
Lane Configurations												
Traffic Volume (veh/h)	65	320	80	15	345	35	90	40	15	25	30	80
Future Volume (veh/h)	65	320	80	15	345	35	90	40	15	25	30	80
Initial Q (Qb), veh	0	0	0	0	0	0	0	0	0	0	0	0
Ped-Bike Adj(A_pbT)	1.00		1.00	1.00		1.00	1.00		1.00	1.00		1.00
Parking Bus, Adj	1.00	1.00	1.00	1.00	1.00	1.00	1.00	1.00	1.00	1.00	1.00	1.00
Work Zone On Approach		No			No			No			No	
Adj Sat Flow, veh/h/ln	1870	1659	1659	1870	1870	1870	1885	1672	1672	1870	1659	1659
Adj Flow Rate, veh/h	66	327	82	15	352	36	92	41	15	26	31	82
Peak Hour Factor	0.98	0.98	0.98	0.98	0.98	0.98	0.98	0.98	0.98	0.98	0.98	0.98
Percent Heavy Veh, %	2	2	2	2	2	2	1	1	1	2	2	2
Cap, veh/h	601	712	179	85	531	53	321	235	86	379	81	214
Arrive On Green	0.10	0.56	0.56	0.33	0.33	0.33	0.20	0.20	0.20	0.20	0.20	0.20
Sat Flow, veh/h	1781	1279	321	26	1628	162	1290	1168	427	1348	402	1065
Grp Volume(v), veh/h	66	0	409	403	0	0	92	0	56	26	0	113
Grp Sat Flow(s),veh/h/ln	1781	0	1600	1816	0	0	1290	0	1595	1348	0	1467
Q Serve(g_s), s	1.0	0.0	7.4	0.0	0.0	0.0	3.2	0.0	1.4	0.8	0.0	3.2
Cycle Q Clear(g_c), s	1.0	0.0	7.4	9.2	0.0	0.0	6.5	0.0	1.4	2.2	0.0	3.2
Prop In Lane	1.00		0.20	0.04		0.09	1.00		0.27	1.00		0.73
Lane Grp Cap(c), veh/h	601	0	891	669	0	0	321	0	321	379	0	295
V/C Ratio(X)	0.11	0.00	0.46	0.60	0.00	0.00	0.29	0.00	0.17	0.07	0.00	0.38
Avail Cap(c_a), veh/h	1342	0	2512	1732	0	0	988	0	1146	1077	0	1054
HCM Platoon Ratio	1.00	1.00	1.00	1.00	1.00	1.00	1.00	1.00	1.00	1.00	1.00	1.00
Upstream Filter(I)	1.00	0.00	1.00	1.00	0.00	0.00	1.00	0.00	1.00	1.00	0.00	1.00
Uniform Delay (d), s/veh	7.3	0.0	6.4	14.2	0.0	0.0	19.7	0.0	16.1	17.0	0.0	16.8
Incr Delay (d2), s/veh	0.0	0.0	0.5	1.3	0.0	0.0	0.2	0.0	0.1	0.0	0.0	0.3
Initial Q Delay(d3),s/veh	0.0	0.0	0.0	0.0	0.0	0.0	0.0	0.0	0.0	0.0	0.0	0.0
%ile BackOfQ(95%),veh/ln	0.6	0.0	3.5	6.4	0.0	0.0	1.6	0.0	0.9	0.4	0.0	1.8
Unsig. Movement Delay, s/veh												
LnGrp Delay(d),s/veh	7.3	0.0	7.0	15.4	0.0	0.0	19.8	0.0	16.2	17.1	0.0	17.2
LnGrp LOS	A	A	A	B	A	A	B	A	B	B	A	B
Approach Vol, veh/h		475			403			148			139	
Approach Delay, s/veh		7.0			15.4			18.5			17.1	
Approach LOS		A			B			B			B	

Timer - Assigned Phs	1	2		4		6		8
Phs Duration (G+Y+Rc), s	11.2	21.2		16.3		32.4		16.3
Change Period (Y+Rc), s	6.5	* 5.3		6.5		* 5.3		6.5
Max Green Setting (Gmax), s	25.0	* 45		35.0		* 77		35.0
Max Q Clear Time (g_c+I1), s	3.0	11.2		8.5		9.4		5.2
Green Ext Time (p_c), s	0.0	4.4		0.2		4.8		0.4

Intersection Summary	
HCM 6th Ctrl Delay	12.6
HCM 6th LOS	B

Notes

* HCM 6th computational engine requires equal clearance times for the phases crossing the barrier.

Intersection	
Int Delay, s/veh	0

Movement	EBL	EBT	WBT	WBR	SBL	SBR
Lane Configurations		↑	↑		⋔	
Traffic Vol, veh/h	0	360	395	0	0	0
Future Vol, veh/h	0	360	395	0	0	0
Conflicting Peds, #/hr	0	0	0	0	0	0
Sign Control	Free	Free	Free	Free	Stop	Stop
RT Channelized	-	None	-	None	-	None
Storage Length	-	-	-	-	0	-
Veh in Median Storage, #	-	0	0	-	0	-
Grade, %	-	0	0	-	0	-
Peak Hour Factor	92	92	92	92	92	92
Heavy Vehicles, %	3	3	2	2	2	2
Mvmt Flow	0	391	429	0	0	0

Major/Minor	Major1		Major2		Minor2	
Conflicting Flow All	-	0	-	0	820	429
Stage 1	-	-	-	-	429	-
Stage 2	-	-	-	-	391	-
Critical Hdwy	-	-	-	-	6.42	6.22
Critical Hdwy Stg 1	-	-	-	-	5.42	-
Critical Hdwy Stg 2	-	-	-	-	5.42	-
Follow-up Hdwy	-	-	-	-	3.518	3.318
Pot Cap-1 Maneuver	0	-	-	0	345	626
Stage 1	0	-	-	0	657	-
Stage 2	0	-	-	0	683	-
Platoon blocked, %		-	-			
Mov Cap-1 Maneuver	-	-	-	-	345	626
Mov Cap-2 Maneuver	-	-	-	-	345	-
Stage 1	-	-	-	-	657	-
Stage 2	-	-	-	-	683	-

Approach	EB	WB	SB
HCM Control Delay, s	0	0	0
HCM LOS			A

Minor Lane/Major Mvmt	EBT	WBT	SBLn1
Capacity (veh/h)	-	-	-
HCM Lane V/C Ratio	-	-	-
HCM Control Delay (s)	-	-	0
HCM Lane LOS	-	-	A
HCM 95th %tile Q(veh)	-	-	-

Intersection	
Int Delay, s/veh	1.2

Movement	EBL	EBT	EBR	WBL	WBT	WBR	NBL	NBT	NBR	SBL	SBT	SBR
Lane Configurations												
Traffic Vol, veh/h	20	335	5	0	360	20	0	0	0	20	0	35
Future Vol, veh/h	20	335	5	0	360	20	0	0	0	20	0	35
Conflicting Peds, #/hr	1	0	0	0	0	1	0	0	0	0	0	0
Sign Control	Free	Free	Free	Free	Free	Free	Stop	Stop	Stop	Stop	Stop	Stop
RT Channelized	-	-	None	-	-	None	-	-	None	-	-	None
Storage Length	-	-	-	-	-	-	-	-	-	-	-	-
Veh in Median Storage, #	-	0	-	-	0	-	-	0	-	-	0	-
Grade, %	-	0	-	-	0	-	-	0	-	-	0	-
Peak Hour Factor	94	94	94	94	94	94	94	94	94	94	94	94
Heavy Vehicles, %	3	3	3	3	3	3	2	2	2	2	2	2
Mvmt Flow	21	356	5	0	383	21	0	0	0	21	0	37

Major/Minor	Major1			Major2			Minor1			Minor2		
Conflicting Flow All	405	0	0	361	0	0	813	806	359	796	798	395
Stage 1	-	-	-	-	-	-	401	401	-	395	395	-
Stage 2	-	-	-	-	-	-	412	405	-	401	403	-
Critical Hdwy	4.13	-	-	4.13	-	-	7.12	6.52	6.22	7.12	6.52	6.22
Critical Hdwy Stg 1	-	-	-	-	-	-	6.12	5.52	-	6.12	5.52	-
Critical Hdwy Stg 2	-	-	-	-	-	-	6.12	5.52	-	6.12	5.52	-
Follow-up Hdwy	2.227	-	-	2.227	-	-	3.518	4.018	3.318	3.518	4.018	3.318
Pot Cap-1 Maneuver	1148	-	-	1192	-	-	297	316	685	305	319	654
Stage 1	-	-	-	-	-	-	626	601	-	630	605	-
Stage 2	-	-	-	-	-	-	617	598	-	626	600	-
Platoon blocked, %		-	-		-	-						
Mov Cap-1 Maneuver	1147	-	-	1192	-	-	275	308	685	300	311	653
Mov Cap-2 Maneuver	-	-	-	-	-	-	275	308	-	300	311	-
Stage 1	-	-	-	-	-	-	612	587	-	615	604	-
Stage 2	-	-	-	-	-	-	582	597	-	612	586	-

Approach	EB	WB	NB	SB
HCM Control Delay, s	0.5	0	0	14
HCM LOS			A	B

Minor Lane/Major Mvmt	NBLn1	EBL	EBT	EBR	WBL	WBT	WBR	SBLn1
Capacity (veh/h)	-	1147	-	-	1192	-	-	457
HCM Lane V/C Ratio	-	0.019	-	-	-	-	-	0.128
HCM Control Delay (s)	0	8.2	0	-	0	-	-	14
HCM Lane LOS	A	A	A	-	A	-	-	B
HCM 95th %tile Q(veh)	-	0.1	-	-	0	-	-	0.4

Intersection	
Int Delay, s/veh	0

Movement	EBL	EBT	WBT	WBR	SBL	SBR
Lane Configurations		↑	↑		⋔	
Traffic Vol, veh/h	0	355	380	0	0	0
Future Vol, veh/h	0	355	380	0	0	0
Conflicting Peds, #/hr	0	0	0	0	0	0
Sign Control	Free	Free	Free	Free	Stop	Stop
RT Channelized	-	None	-	None	-	None
Storage Length	-	-	-	-	0	-
Veh in Median Storage, #	-	0	0	-	0	-
Grade, %	-	0	0	-	0	-
Peak Hour Factor	92	92	92	92	92	92
Heavy Vehicles, %	2	2	3	3	2	2
Mvmt Flow	0	386	413	0	0	0

Major/Minor	Major1		Major2		Minor2	
Conflicting Flow All	-	0	-	0	799	413
Stage 1	-	-	-	-	413	-
Stage 2	-	-	-	-	386	-
Critical Hdwy	-	-	-	-	6.42	6.22
Critical Hdwy Stg 1	-	-	-	-	5.42	-
Critical Hdwy Stg 2	-	-	-	-	5.42	-
Follow-up Hdwy	-	-	-	-	3.518	3.318
Pot Cap-1 Maneuver	0	-	-	0	355	639
Stage 1	0	-	-	0	668	-
Stage 2	0	-	-	0	687	-
Platoon blocked, %		-	-			
Mov Cap-1 Maneuver	-	-	-	-	355	639
Mov Cap-2 Maneuver	-	-	-	-	355	-
Stage 1	-	-	-	-	668	-
Stage 2	-	-	-	-	687	-

Approach	EB	WB	SB
HCM Control Delay, s	0	0	0
HCM LOS			A

Minor Lane/Major Mvmt	EBT	WBT	SBLn1
Capacity (veh/h)	-	-	-
HCM Lane V/C Ratio	-	-	-
HCM Control Delay (s)	-	-	0
HCM Lane LOS	-	-	A
HCM 95th %tile Q(veh)	-	-	-

Intersection	
Int Delay, s/veh	0

Movement	EBT	EBR	WBL	WBT	NBL	NBR
Lane Configurations	↑			↑	⋔	
Traffic Vol, veh/h	355	0	0	380	0	0
Future Vol, veh/h	355	0	0	380	0	0
Conflicting Peds, #/hr	0	0	0	0	0	0
Sign Control	Free	Free	Free	Free	Stop	Stop
RT Channelized	-	None	-	None	-	None
Storage Length	-	-	-	-	0	-
Veh in Median Storage, #	0	-	-	0	0	-
Grade, %	0	-	-	0	0	-
Peak Hour Factor	92	92	92	92	92	92
Heavy Vehicles, %	2	2	3	3	2	2
Mvmt Flow	386	0	0	413	0	0

Major/Minor	Major1		Major2		Minor1	
Conflicting Flow All	0	-	-	-	799	386
Stage 1	-	-	-	-	386	-
Stage 2	-	-	-	-	413	-
Critical Hdwy	-	-	-	-	6.42	6.22
Critical Hdwy Stg 1	-	-	-	-	5.42	-
Critical Hdwy Stg 2	-	-	-	-	5.42	-
Follow-up Hdwy	-	-	-	-	3.518	3.318
Pot Cap-1 Maneuver	-	0	0	-	355	662
Stage 1	-	0	0	-	687	-
Stage 2	-	0	0	-	668	-
Platoon blocked, %	-			-		
Mov Cap-1 Maneuver	-	-	-	-	355	662
Mov Cap-2 Maneuver	-	-	-	-	355	-
Stage 1	-	-	-	-	687	-
Stage 2	-	-	-	-	668	-

Approach	EB	WB	NB
HCM Control Delay, s	0	0	0
HCM LOS			A

Minor Lane/Major Mvmt	NBLn1	EBT	WBT
Capacity (veh/h)	-	-	-
HCM Lane V/C Ratio	-	-	-
HCM Control Delay (s)	0	-	-
HCM Lane LOS	A	-	-
HCM 95th %tile Q(veh)	-	-	-

Intersection	
Int Delay, s/veh	5.6

Movement	EBL	EBT	EBR	WBL	WBT	WBR	NBL	NBT	NBR	SBL	SBT	SBR
Lane Configurations												
Traffic Vol, veh/h	50	235	70	20	255	40	50	25	10	55	30	75
Future Vol, veh/h	50	235	70	20	255	40	50	25	10	55	30	75
Conflicting Peds, #/hr	0	0	0	0	0	0	0	0	0	0	0	0
Sign Control	Free	Free	Free	Free	Free	Free	Stop	Stop	Stop	Stop	Stop	Stop
RT Channelized	-	-	None	-	-	None	-	-	None	-	-	None
Storage Length	175	-	-	150	-	125	-	-	-	100	-	-
Veh in Median Storage, #	-	0	-	-	0	-	-	0	-	-	0	-
Grade, %	-	0	-	-	0	-	-	0	-	-	0	-
Peak Hour Factor	92	92	92	92	92	92	92	92	92	92	92	92
Heavy Vehicles, %	2	2	2	3	3	3	2	2	2	1	1	1
Mvmt Flow	54	255	76	22	277	43	54	27	11	60	33	82

Major/Minor	Major1			Major2			Minor1			Minor2		
Conflicting Flow All	320	0	0	331	0	0	801	765	293	741	760	277
Stage 1	-	-	-	-	-	-	401	401	-	321	321	-
Stage 2	-	-	-	-	-	-	400	364	-	420	439	-
Critical Hdwy	4.12	-	-	4.13	-	-	7.12	6.52	6.22	7.11	6.51	6.21
Critical Hdwy Stg 1	-	-	-	-	-	-	6.12	5.52	-	6.11	5.51	-
Critical Hdwy Stg 2	-	-	-	-	-	-	6.12	5.52	-	6.11	5.51	-
Follow-up Hdwy	2.218	-	-	2.227	-	-	3.518	4.018	3.318	3.509	4.009	3.309
Pot Cap-1 Maneuver	1240	-	-	1223	-	-	303	333	746	333	337	764
Stage 1	-	-	-	-	-	-	626	601	-	693	653	-
Stage 2	-	-	-	-	-	-	626	624	-	613	580	-
Platoon blocked, %		-	-		-	-						
Mov Cap-1 Maneuver	1240	-	-	1223	-	-	238	313	746	292	316	764
Mov Cap-2 Maneuver	-	-	-	-	-	-	238	313	-	292	316	-
Stage 1	-	-	-	-	-	-	598	575	-	663	641	-
Stage 2	-	-	-	-	-	-	521	613	-	550	554	-

Approach	EB	WB	NB	SB
HCM Control Delay, s	1.1	0.5	24.1	15.8
HCM LOS			C	C

Minor Lane/Major Mvmt	NBLn1	EBL	EBT	EBR	WBL	WBT	WBR	SBLn1	SBLn2
Capacity (veh/h)	280	1240	-	-	1223	-	-	292	544
HCM Lane V/C Ratio	0.33	0.044	-	-	0.018	-	-	0.205	0.21
HCM Control Delay (s)	24.1	8	-	-	8	-	-	20.5	13.4
HCM Lane LOS	C	A	-	-	A	-	-	C	B
HCM 95th %tile Q(veh)	1.4	0.1	-	-	0.1	-	-	0.8	0.8

HCM 6th Signalized Intersection Summary
1: Jackson Dr & WIS-60

05/19/2020

Movement	EBL	EBT	EBR	WBL	WBT	WBR	NBL	NBT	NBR	SBL	SBT	SBR
Lane Configurations												
Traffic Volume (veh/h)	70	355	30	15	370	30	115	50	25	50	25	185
Future Volume (veh/h)	70	355	30	15	370	30	115	50	25	50	25	185
Initial Q (Qb), veh	0	0	0	0	0	0	0	0	0	0	0	0
Ped-Bike Adj(A_pbT)	1.00		1.00	1.00		1.00	1.00		0.97	1.00		0.99
Parking Bus, Adj	1.00	1.00	1.00	1.00	1.00	1.00	1.00	1.00	1.00	1.00	1.00	1.00
Work Zone On Approach		No			No			No			No	
Adj Sat Flow, veh/h/ln	1752	1554	1554	1767	1767	1767	1826	1619	1619	1856	1646	1646
Adj Flow Rate, veh/h	73	370	31	16	385	31	120	52	26	52	26	193
Peak Hour Factor	0.96	0.96	0.96	0.96	0.96	0.96	0.96	0.96	0.96	0.96	0.96	0.96
Percent Heavy Veh, %	10	10	10	9	9	9	5	5	5	3	3	3
Cap, veh/h	480	748	63	69	521	41	283	282	141	430	47	348
Arrive On Green	0.09	0.53	0.53	0.33	0.33	0.33	0.28	0.28	0.28	0.28	0.28	0.28
Sat Flow, veh/h	1668	1413	118	26	1571	123	1131	1008	504	1305	168	1246
Grp Volume(v), veh/h	73	0	401	432	0	0	120	0	78	52	0	219
Grp Sat Flow(s),veh/h/ln	1668	0	1532	1720	0	0	1131	0	1512	1305	0	1413
Q Serve(g_s), s	1.5	0.0	10.3	1.7	0.0	0.0	6.2	0.0	2.4	1.9	0.0	8.2
Cycle Q Clear(g_c), s	1.5	0.0	10.3	13.7	0.0	0.0	14.4	0.0	2.4	4.4	0.0	8.2
Prop In Lane	1.00		0.08	0.04		0.07	1.00		0.33	1.00		0.88
Lane Grp Cap(c), veh/h	480	0	811	631	0	0	283	0	422	430	0	395
V/C Ratio(X)	0.15	0.00	0.49	0.68	0.00	0.00	0.42	0.00	0.18	0.12	0.00	0.55
Avail Cap(c_a), veh/h	1001	0	1899	1302	0	0	609	0	857	805	0	802
HCM Platoon Ratio	1.00	1.00	1.00	1.00	1.00	1.00	1.00	1.00	1.00	1.00	1.00	1.00
Upstream Filter(I)	1.00	0.00	1.00	1.00	0.00	0.00	1.00	0.00	1.00	1.00	0.00	1.00
Uniform Delay (d), s/veh	9.5	0.0	9.3	18.3	0.0	0.0	25.1	0.0	16.9	18.6	0.0	19.0
Incr Delay (d2), s/veh	0.1	0.0	0.7	2.0	0.0	0.0	0.4	0.0	0.1	0.0	0.0	0.5
Initial Q Delay(d3),s/veh	0.0	0.0	0.0	0.0	0.0	0.0	0.0	0.0	0.0	0.0	0.0	0.0
%ile BackOfQ(95%),veh/ln	0.9	0.0	5.6	9.2	0.0	0.0	2.9	0.0	1.4	1.0	0.0	4.6
Unsig. Movement Delay, s/veh												
LnGrp Delay(d),s/veh	9.6	0.0	9.9	20.3	0.0	0.0	25.5	0.0	17.0	18.6	0.0	19.4
LnGrp LOS	A	A	A	C	A	A	C	A	B	B	A	B
Approach Vol, veh/h		474			432			198			271	
Approach Delay, s/veh		9.9			20.3			22.1			19.3	
Approach LOS		A			C			C			B	

Timer - Assigned Phs	1	2		4		6		8
Phs Duration (G+Y+Rc), s	12.2	25.8		23.7		38.0		23.7
Change Period (Y+Rc), s	6.5	* 5.3		6.5		* 5.3		6.5
Max Green Setting (Gmax), s	25.0	* 45		35.0		* 77		35.0
Max Q Clear Time (g_c+I1), s	3.5	15.7		16.4		12.3		10.2
Green Ext Time (p_c), s	0.1	4.7		0.4		4.7		0.8

Intersection Summary	
HCM 6th Ctrl Delay	16.8
HCM 6th LOS	B

Notes

* HCM 6th computational engine requires equal clearance times for the phases crossing the barrier.

Intersection	
Int Delay, s/veh	0.2

Movement	EBL	EBT	WBT	WBR	SBL	SBR
Lane Configurations						
Traffic Vol, veh/h	10	420	415	5	5	0
Future Vol, veh/h	10	420	415	5	5	0
Conflicting Peds, #/hr	0	0	0	0	0	0
Sign Control	Free	Free	Free	Free	Stop	Stop
RT Channelized	-	None	-	None	-	None
Storage Length	-	-	-	-	0	-
Veh in Median Storage, #	-	0	0	-	0	-
Grade, %	-	0	0	-	0	-
Peak Hour Factor	92	92	92	92	92	92
Heavy Vehicles, %	4	4	9	9	2	2
Mvmt Flow	11	457	451	5	5	0

Major/Minor	Major1		Major2		Minor2	
Conflicting Flow All	456	0	-	0	933	454
Stage 1	-	-	-	-	454	-
Stage 2	-	-	-	-	479	-
Critical Hdwy	4.14	-	-	-	6.42	6.22
Critical Hdwy Stg 1	-	-	-	-	5.42	-
Critical Hdwy Stg 2	-	-	-	-	5.42	-
Follow-up Hdwy	2.236	-	-	-	3.518	3.318
Pot Cap-1 Maneuver	1094	-	-	-	295	606
Stage 1	-	-	-	-	640	-
Stage 2	-	-	-	-	623	-
Platoon blocked, %		-	-	-		
Mov Cap-1 Maneuver	1094	-	-	-	291	606
Mov Cap-2 Maneuver	-	-	-	-	291	-
Stage 1	-	-	-	-	632	-
Stage 2	-	-	-	-	623	-

Approach	EB	WB	SB
HCM Control Delay, s	0.2	0	17.6
HCM LOS			C

Minor Lane/Major Mvmt	EBL	EBT	WBT	WBR	SBLn1
Capacity (veh/h)	1094	-	-	-	291
HCM Lane V/C Ratio	0.01	-	-	-	0.019
HCM Control Delay (s)	8.3	0	-	-	17.6
HCM Lane LOS	A	A	-	-	C
HCM 95th %tile Q(veh)	0	-	-	-	0.1

Intersection	
Int Delay, s/veh	4.6

Movement	EBL	EBT	EBR	WBL	WBT	WBR	NBL	NBT	NBR	SBL	SBT	SBR
Lane Configurations												
Traffic Vol, veh/h	10	385	30	5	315	15	45	0	5	70	0	60
Future Vol, veh/h	10	385	30	5	315	15	45	0	5	70	0	60
Conflicting Peds, #/hr	0	0	0	0	0	0	0	0	0	0	0	0
Sign Control	Free	Free	Free	Free	Free	Free	Stop	Stop	Stop	Stop	Stop	Stop
RT Channelized	-	-	None	-	-	None	-	-	None	-	-	None
Storage Length	-	-	-	-	-	-	-	-	-	-	-	-
Veh in Median Storage, #	-	0	-	-	0	-	-	0	-	-	0	-
Grade, %	-	0	-	-	0	-	-	0	-	-	0	-
Peak Hour Factor	84	84	84	84	84	84	84	84	84	84	84	84
Heavy Vehicles, %	4	4	4	6	6	6	2	2	2	1	1	1
Mvmt Flow	12	458	36	6	375	18	54	0	6	83	0	71

Major/Minor	Major1			Major2			Minor1			Minor2		
Conflicting Flow All	393	0	0	494	0	0	932	905	476	899	914	384
Stage 1	-	-	-	-	-	-	500	500	-	396	396	-
Stage 2	-	-	-	-	-	-	432	405	-	503	518	-
Critical Hdwy	4.14	-	-	4.16	-	-	7.12	6.52	6.22	7.11	6.51	6.21
Critical Hdwy Stg 1	-	-	-	-	-	-	6.12	5.52	-	6.11	5.51	-
Critical Hdwy Stg 2	-	-	-	-	-	-	6.12	5.52	-	6.11	5.51	-
Follow-up Hdwy	2.236	-	-	2.254	-	-	3.518	4.018	3.318	3.509	4.009	3.309
Pot Cap-1 Maneuver	1155	-	-	1049	-	-	247	276	589	261	274	666
Stage 1	-	-	-	-	-	-	553	543	-	631	606	-
Stage 2	-	-	-	-	-	-	602	598	-	553	535	-
Platoon blocked, %		-	-		-	-						
Mov Cap-1 Maneuver	1155	-	-	1049	-	-	217	270	589	254	268	666
Mov Cap-2 Maneuver	-	-	-	-	-	-	217	270	-	254	268	-
Stage 1	-	-	-	-	-	-	545	535	-	622	602	-
Stage 2	-	-	-	-	-	-	534	594	-	540	528	-

Approach	EB	WB	NB	SB
HCM Control Delay, s	0.2	0.1	25.8	22.7
HCM LOS			D	C

Minor Lane/Major Mvmt	NBLn1	EBL	EBT	EBR	WBL	WBT	WBR	SBLn1
Capacity (veh/h)	232	1155	-	-	1049	-	-	356
HCM Lane V/C Ratio	0.257	0.01	-	-	0.006	-	-	0.435
HCM Control Delay (s)	25.8	8.1	0	-	8.5	0	-	22.7
HCM Lane LOS	D	A	A	-	A	A	-	C
HCM 95th %tile Q(veh)	1	0	-	-	0	-	-	2.1

Intersection	
Int Delay, s/veh	0

Movement	EBL	EBT	WBT	WBR	SBL	SBR
Lane Configurations		↑	↑		⋔	
Traffic Vol, veh/h	0	460	335	0	0	0
Future Vol, veh/h	0	460	335	0	0	0
Conflicting Peds, #/hr	0	0	0	0	0	0
Sign Control	Free	Free	Free	Free	Stop	Stop
RT Channelized	-	None	-	None	-	None
Storage Length	-	-	-	-	0	-
Veh in Median Storage, #	-	0	0	-	0	-
Grade, %	-	0	0	-	0	-
Peak Hour Factor	92	92	92	92	92	92
Heavy Vehicles, %	6	6	6	6	2	2
Mvmt Flow	0	500	364	0	0	0

Major/Minor	Major1		Major2		Minor2	
Conflicting Flow All	-	0	-	0	864	364
Stage 1	-	-	-	-	364	-
Stage 2	-	-	-	-	500	-
Critical Hdwy	-	-	-	-	6.42	6.22
Critical Hdwy Stg 1	-	-	-	-	5.42	-
Critical Hdwy Stg 2	-	-	-	-	5.42	-
Follow-up Hdwy	-	-	-	-	3.518	3.318
Pot Cap-1 Maneuver	0	-	-	0	325	681
Stage 1	0	-	-	0	703	-
Stage 2	0	-	-	0	609	-
Platoon blocked, %		-	-			
Mov Cap-1 Maneuver	-	-	-	-	325	681
Mov Cap-2 Maneuver	-	-	-	-	325	-
Stage 1	-	-	-	-	703	-
Stage 2	-	-	-	-	609	-

Approach	EB	WB	SB
HCM Control Delay, s	0	0	0
HCM LOS			A

Minor Lane/Major Mvmt	EBT	WBT	SBLn1
Capacity (veh/h)	-	-	-
HCM Lane V/C Ratio	-	-	-
HCM Control Delay (s)	-	-	0
HCM Lane LOS	-	-	A
HCM 95th %tile Q(veh)	-	-	-

Intersection	
Int Delay, s/veh	0

Movement	EBT	EBR	WBL	WBT	NBL	NBR
Lane Configurations	↑			↑	⋔	
Traffic Vol, veh/h	460	0	0	335	0	0
Future Vol, veh/h	460	0	0	335	0	0
Conflicting Peds, #/hr	0	0	0	0	0	0
Sign Control	Free	Free	Free	Free	Stop	Stop
RT Channelized	-	None	-	None	-	None
Storage Length	-	-	-	-	0	-
Veh in Median Storage, #	0	-	-	0	0	-
Grade, %	0	-	-	0	0	-
Peak Hour Factor	92	92	92	92	92	92
Heavy Vehicles, %	6	6	6	6	2	2
Mvmt Flow	500	0	0	364	0	0

Major/Minor	Major1		Major2		Minor1	
Conflicting Flow All	0	-	-	-	864	500
Stage 1	-	-	-	-	500	-
Stage 2	-	-	-	-	364	-
Critical Hdwy	-	-	-	-	6.42	6.22
Critical Hdwy Stg 1	-	-	-	-	5.42	-
Critical Hdwy Stg 2	-	-	-	-	5.42	-
Follow-up Hdwy	-	-	-	-	3.518	3.318
Pot Cap-1 Maneuver	-	0	0	-	325	571
Stage 1	-	0	0	-	609	-
Stage 2	-	0	0	-	703	-
Platoon blocked, %	-			-		
Mov Cap-1 Maneuver	-	-	-	-	325	571
Mov Cap-2 Maneuver	-	-	-	-	325	-
Stage 1	-	-	-	-	609	-
Stage 2	-	-	-	-	703	-

Approach	EB	WB	NB
HCM Control Delay, s	0	0	0
HCM LOS			A

Minor Lane/Major Mvmt	NBLn1	EBT	WBT
Capacity (veh/h)	-	-	-
HCM Lane V/C Ratio	-	-	-
HCM Control Delay (s)	0	-	-
HCM Lane LOS	A	-	-
HCM 95th %tile Q(veh)	-	-	-

Intersection	
Int Delay, s/veh	7.6

Movement	EBL	EBT	EBR	WBL	WBT	WBR	NBL	NBT	NBR	SBL	SBT	SBR
Lane Configurations												
Traffic Vol, veh/h	70	355	35	25	240	90	25	20	35	80	15	70
Future Vol, veh/h	70	355	35	25	240	90	25	20	35	80	15	70
Conflicting Peds, #/hr	0	0	1	1	0	0	0	0	0	0	0	0
Sign Control	Free	Free	Free	Free	Free	Free	Stop	Stop	Stop	Stop	Stop	Stop
RT Channelized	-	-	None	-	-	None	-	-	None	-	-	None
Storage Length	175	-	-	150	-	125	-	-	-	100	-	-
Veh in Median Storage, #	-	0	-	-	0	-	-	0	-	-	0	-
Grade, %	-	0	-	-	0	-	-	0	-	-	0	-
Peak Hour Factor	84	84	84	84	84	84	84	84	84	84	84	84
Heavy Vehicles, %	6	6	6	4	4	4	7	7	7	6	6	6
Mvmt Flow	83	423	42	30	286	107	30	24	42	95	18	83

Major/Minor	Major1			Major2			Minor1			Minor2		
Conflicting Flow All	393	0	0	466	0	0	1061	1064	445	989	978	286
Stage 1	-	-	-	-	-	-	611	611	-	346	346	-
Stage 2	-	-	-	-	-	-	450	453	-	643	632	-
Critical Hdwy	4.16	-	-	4.14	-	-	7.17	6.57	6.27	7.16	6.56	6.26
Critical Hdwy Stg 1	-	-	-	-	-	-	6.17	5.57	-	6.16	5.56	-
Critical Hdwy Stg 2	-	-	-	-	-	-	6.17	5.57	-	6.16	5.56	-
Follow-up Hdwy	2.254	-	-	2.236	-	-	3.563	4.063	3.363	3.554	4.054	3.354
Pot Cap-1 Maneuver	1144	-	-	1085	-	-	197	218	603	222	247	744
Stage 1	-	-	-	-	-	-	473	477	-	661	628	-
Stage 2	-	-	-	-	-	-	579	562	-	455	468	-
Platoon blocked, %		-	-		-	-						
Mov Cap-1 Maneuver	1144	-	-	1084	-	-	152	196	602	174	222	744
Mov Cap-2 Maneuver	-	-	-	-	-	-	152	196	-	174	222	-
Stage 1	-	-	-	-	-	-	438	442	-	613	610	-
Stage 2	-	-	-	-	-	-	485	546	-	372	433	-

Approach	EB	WB	NB	SB
HCM Control Delay, s	1.3	0.6	28.6	30.3
HCM LOS			D	D

Minor Lane/Major Mvmt	NBLn1	EBL	EBT	EBR	WBL	WBT	WBR	SBLn1	SBLn2
Capacity (veh/h)	246	1144	-	-	1084	-	-	174	526
HCM Lane V/C Ratio	0.387	0.073	-	-	0.027	-	-	0.547	0.192
HCM Control Delay (s)	28.6	8.4	-	-	8.4	-	-	48.2	13.5
HCM Lane LOS	D	A	-	-	A	-	-	E	B
HCM 95th %tile Q(veh)	1.7	0.2	-	-	0.1	-	-	2.8	0.7

HCM 6th Signalized Intersection Summary
1: Jackson Dr & WIS-60

05/19/2020

Movement	EBL	EBT	EBR	WBL	WBT	WBR	NBL	NBT	NBR	SBL	SBT	SBR
Lane Configurations												
Traffic Volume (veh/h)	180	430	125	20	350	55	70	80	20	50	65	105
Future Volume (veh/h)	180	430	125	20	350	55	70	80	20	50	65	105
Initial Q (Qb), veh	0	0	0	0	0	0	0	0	0	0	0	0
Ped-Bike Adj(A_pbT)	1.00		0.98	1.00		0.98	0.99		0.99	0.99		0.97
Parking Bus, Adj	1.00	1.00	1.00	1.00	1.00	1.00	1.00	1.00	1.00	1.00	1.00	1.00
Work Zone On Approach		No			No			No			No	
Adj Sat Flow, veh/h/ln	1856	1646	1646	1841	1841	1841	1856	1646	1646	1885	1672	1672
Adj Flow Rate, veh/h	194	462	134	22	376	59	75	86	22	54	70	113
Peak Hour Factor	0.93	0.93	0.93	0.93	0.93	0.93	0.93	0.93	0.93	0.93	0.93	0.93
Percent Heavy Veh, %	3	3	3	4	4	4	3	3	3	1	1	1
Cap, veh/h	576	708	205	76	512	78	254	282	72	334	126	204
Arrive On Green	0.13	0.58	0.58	0.35	0.35	0.35	0.22	0.22	0.22	0.22	0.22	0.22
Sat Flow, veh/h	1767	1219	354	38	1483	225	1185	1261	323	1287	564	910
Grp Volume(v), veh/h	194	0	596	457	0	0	75	0	108	54	0	183
Grp Sat Flow(s),veh/h/ln	1767	0	1573	1746	0	0	1185	0	1584	1287	0	1474
Q Serve(g_s), s	3.7	0.0	15.4	2.5	0.0	0.0	3.6	0.0	3.4	2.2	0.0	6.6
Cycle Q Clear(g_c), s	3.7	0.0	15.4	13.7	0.0	0.0	10.2	0.0	3.4	5.6	0.0	6.6
Prop In Lane	1.00		0.22	0.05		0.13	1.00		0.20	1.00		0.62
Lane Grp Cap(c), veh/h	576	0	913	665	0	0	254	0	355	334	0	330
V/C Ratio(X)	0.34	0.00	0.65	0.69	0.00	0.00	0.29	0.00	0.30	0.16	0.00	0.55
Avail Cap(c_a), veh/h	1083	0	1995	1343	0	0	677	0	919	793	0	855
HCM Platoon Ratio	1.00	1.00	1.00	1.00	1.00	1.00	1.00	1.00	1.00	1.00	1.00	1.00
Upstream Filter(I)	1.00	0.00	1.00	1.00	0.00	0.00	1.00	0.00	1.00	1.00	0.00	1.00
Uniform Delay (d), s/veh	8.3	0.0	8.5	17.4	0.0	0.0	25.3	0.0	19.5	21.8	0.0	20.7
Incr Delay (d2), s/veh	0.1	0.0	1.2	1.9	0.0	0.0	0.2	0.0	0.2	0.1	0.0	0.5
Initial Q Delay(d3),s/veh	0.0	0.0	0.0	0.0	0.0	0.0	0.0	0.0	0.0	0.0	0.0	0.0
%ile BackOfQ(95%),veh/ln	2.2	0.0	8.0	9.3	0.0	0.0	1.8	0.0	2.2	1.2	0.0	4.0
Unsig. Movement Delay, s/veh												
LnGrp Delay(d),s/veh	8.4	0.0	9.7	19.2	0.0	0.0	25.5	0.0	19.7	21.9	0.0	21.3
LnGrp LOS	A	A	A	B	A	A	C	A	B	C	A	C
Approach Vol, veh/h		790			457			183			237	
Approach Delay, s/veh		9.4			19.2			22.1			21.4	
Approach LOS		A			B			C			C	

Timer - Assigned Phs	1	2		4		6		8
Phs Duration (G+Y+Rc), s	14.2	26.1		20.0		40.3		20.0
Change Period (Y+Rc), s	6.5	* 5.3		6.5		* 5.3		6.5
Max Green Setting (Gmax), s	25.0	* 45		35.0		* 77		35.0
Max Q Clear Time (g_c+I1), s	5.7	15.7		12.2		17.4		8.6
Green Ext Time (p_c), s	0.2	5.1		0.4		8.1		0.7

Intersection Summary	
HCM 6th Ctrl Delay	15.2
HCM 6th LOS	B

Notes

* HCM 6th computational engine requires equal clearance times for the phases crossing the barrier.

Intersection	
Int Delay, s/veh	0.3

Movement	EBL	EBT	WBT	WBR	SBL	SBR
Lane Configurations						
Traffic Vol, veh/h	5	495	420	0	10	5
Future Vol, veh/h	5	495	420	0	10	5
Conflicting Peds, #/hr	0	0	0	0	0	0
Sign Control	Free	Free	Free	Free	Stop	Stop
RT Channelized	-	None	-	None	-	None
Storage Length	-	-	-	-	0	-
Veh in Median Storage, #	-	0	0	-	0	-
Grade, %	-	0	0	-	0	-
Peak Hour Factor	92	92	92	92	92	92
Heavy Vehicles, %	3	3	4	4	2	2
Mvmt Flow	5	538	457	0	11	5

Major/Minor	Major1		Major2		Minor2	
Conflicting Flow All	457	0	-	0	1005	457
Stage 1	-	-	-	-	457	-
Stage 2	-	-	-	-	548	-
Critical Hdwy	4.13	-	-	-	6.42	6.22
Critical Hdwy Stg 1	-	-	-	-	5.42	-
Critical Hdwy Stg 2	-	-	-	-	5.42	-
Follow-up Hdwy	2.227	-	-	-	3.518	3.318
Pot Cap-1 Maneuver	1099	-	-	-	268	604
Stage 1	-	-	-	-	638	-
Stage 2	-	-	-	-	579	-
Platoon blocked, %		-	-	-		
Mov Cap-1 Maneuver	1099	-	-	-	266	604
Mov Cap-2 Maneuver	-	-	-	-	266	-
Stage 1	-	-	-	-	634	-
Stage 2	-	-	-	-	579	-

Approach	EB	WB	SB
HCM Control Delay, s	0.1	0	16.6
HCM LOS			C

Minor Lane/Major Mvmt	EBL	EBT	WBT	WBR	SBLn1
Capacity (veh/h)	1099	-	-	-	327
HCM Lane V/C Ratio	0.005	-	-	-	0.05
HCM Control Delay (s)	8.3	0	-	-	16.6
HCM Lane LOS	A	A	-	-	C
HCM 95th %tile Q(veh)	0	-	-	-	0.2

Intersection	
Int Delay, s/veh	2.2

Movement	EBL	EBT	EBR	WBL	WBT	WBR	NBL	NBT	NBR	SBL	SBT	SBR
Lane Configurations												
Traffic Vol, veh/h	50	415	40	0	375	45	35	0	5	20	0	10
Future Vol, veh/h	50	415	40	0	375	45	35	0	5	20	0	10
Conflicting Peds, #/hr	1	0	0	0	0	1	0	0	0	0	0	0
Sign Control	Free	Free	Free	Free	Free	Free	Stop	Stop	Stop	Stop	Stop	Stop
RT Channelized	-	-	None	-	-	None	-	-	None	-	-	None
Storage Length	-	-	-	-	-	-	-	-	-	-	-	-
Veh in Median Storage, #	-	0	-	-	0	-	-	0	-	-	0	-
Grade, %	-	0	-	-	0	-	-	0	-	-	0	-
Peak Hour Factor	87	87	87	87	87	87	87	87	87	87	87	87
Heavy Vehicles, %	3	3	3	4	4	4	2	2	2	1	1	1
Mvmt Flow	57	477	46	0	431	52	40	0	6	23	0	11

Major/Minor	Major1			Major2			Minor1			Minor2		
Conflicting Flow All	484	0	0	523	0	0	1077	1098	500	1075	1095	458
Stage 1	-	-	-	-	-	-	614	614	-	458	458	-
Stage 2	-	-	-	-	-	-	463	484	-	617	637	-
Critical Hdwy	4.13	-	-	4.14	-	-	7.12	6.52	6.22	7.11	6.51	6.21
Critical Hdwy Stg 1	-	-	-	-	-	-	6.12	5.52	-	6.11	5.51	-
Critical Hdwy Stg 2	-	-	-	-	-	-	6.12	5.52	-	6.11	5.51	-
Follow-up Hdwy	2.227	-	-	2.236	-	-	3.518	4.018	3.318	3.509	4.009	3.309
Pot Cap-1 Maneuver	1074	-	-	1033	-	-	197	213	571	198	215	605
Stage 1	-	-	-	-	-	-	479	483	-	585	569	-
Stage 2	-	-	-	-	-	-	579	552	-	479	473	-
Platoon blocked, %		-	-		-	-						
Mov Cap-1 Maneuver	1073	-	-	1033	-	-	182	197	571	185	199	604
Mov Cap-2 Maneuver	-	-	-	-	-	-	182	197	-	185	199	-
Stage 1	-	-	-	-	-	-	443	447	-	541	568	-
Stage 2	-	-	-	-	-	-	568	551	-	439	438	-

Approach	EB	WB	NB	SB
HCM Control Delay, s	0.8	0	28.4	22.4
HCM LOS			D	C

Minor Lane/Major Mvmt	NBLn1	EBL	EBT	EBR	WBL	WBT	WBR	SBLn1
Capacity (veh/h)	199	1073	-	-	1033	-	-	241
HCM Lane V/C Ratio	0.231	0.054	-	-	-	-	-	0.143
HCM Control Delay (s)	28.4	8.5	0	-	0	-	-	22.4
HCM Lane LOS	D	A	A	-	A	-	-	C
HCM 95th %tile Q(veh)	0.9	0.2	-	-	0	-	-	0.5

Intersection	
Int Delay, s/veh	0

Movement	EBL	EBT	WBT	WBR	SBL	SBR
Lane Configurations		↑	↑		⋔	
Traffic Vol, veh/h	0	440	420	0	0	0
Future Vol, veh/h	0	440	420	0	0	0
Conflicting Peds, #/hr	0	0	0	0	0	0
Sign Control	Free	Free	Free	Free	Stop	Stop
RT Channelized	-	None	-	None	-	None
Storage Length	-	-	-	-	0	-
Veh in Median Storage, #	-	0	0	-	0	-
Grade, %	-	0	0	-	0	-
Peak Hour Factor	92	92	92	92	92	92
Heavy Vehicles, %	2	2	4	4	2	2
Mvmt Flow	0	478	457	0	0	0

Major/Minor	Major1		Major2		Minor2	
Conflicting Flow All	-	0	-	0	935	457
Stage 1	-	-	-	-	457	-
Stage 2	-	-	-	-	478	-
Critical Hdwy	-	-	-	-	6.42	6.22
Critical Hdwy Stg 1	-	-	-	-	5.42	-
Critical Hdwy Stg 2	-	-	-	-	5.42	-
Follow-up Hdwy	-	-	-	-	3.518	3.318
Pot Cap-1 Maneuver	0	-	-	0	295	604
Stage 1	0	-	-	0	638	-
Stage 2	0	-	-	0	624	-
Platoon blocked, %		-	-			
Mov Cap-1 Maneuver	-	-	-	-	295	604
Mov Cap-2 Maneuver	-	-	-	-	295	-
Stage 1	-	-	-	-	638	-
Stage 2	-	-	-	-	624	-

Approach	EB	WB	SB
HCM Control Delay, s	0	0	0
HCM LOS			A

Minor Lane/Major Mvmt	EBT	WBT	SBLn1
Capacity (veh/h)	-	-	-
HCM Lane V/C Ratio	-	-	-
HCM Control Delay (s)	-	-	0
HCM Lane LOS	-	-	A
HCM 95th %tile Q(veh)	-	-	-

Intersection	
Int Delay, s/veh	0

Movement	EBT	EBR	WBL	WBT	NBL	NBR
Lane Configurations	↑			↑	⋔	
Traffic Vol, veh/h	440	0	0	420	0	0
Future Vol, veh/h	440	0	0	420	0	0
Conflicting Peds, #/hr	0	0	0	0	0	0
Sign Control	Free	Free	Free	Free	Stop	Stop
RT Channelized	-	None	-	None	-	None
Storage Length	-	-	-	-	0	-
Veh in Median Storage, #	0	-	-	0	0	-
Grade, %	0	-	-	0	0	-
Peak Hour Factor	92	92	92	92	92	92
Heavy Vehicles, %	2	2	4	4	2	2
Mvmt Flow	478	0	0	457	0	0

Major/Minor	Major1		Major2		Minor1	
Conflicting Flow All	0	-	-	-	935	478
Stage 1	-	-	-	-	478	-
Stage 2	-	-	-	-	457	-
Critical Hdwy	-	-	-	-	6.42	6.22
Critical Hdwy Stg 1	-	-	-	-	5.42	-
Critical Hdwy Stg 2	-	-	-	-	5.42	-
Follow-up Hdwy	-	-	-	-	3.518	3.318
Pot Cap-1 Maneuver	-	0	0	-	295	587
Stage 1	-	0	0	-	624	-
Stage 2	-	0	0	-	638	-
Platoon blocked, %	-			-		
Mov Cap-1 Maneuver	-	-	-	-	295	587
Mov Cap-2 Maneuver	-	-	-	-	295	-
Stage 1	-	-	-	-	624	-
Stage 2	-	-	-	-	638	-

Approach	EB	WB	NB
HCM Control Delay, s	0	0	0
HCM LOS			A

Minor Lane/Major Mvmt	NBLn1	EBT	WBT
Capacity (veh/h)	-	-	-
HCM Lane V/C Ratio	-	-	-
HCM Control Delay (s)	0	-	-
HCM Lane LOS	A	-	-
HCM 95th %tile Q(veh)	-	-	-

Intersection	
Int Delay, s/veh	13.1

Movement	EBL	EBT	EBR	WBL	WBT	WBR	NBL	NBT	NBR	SBL	SBT	SBR
Lane Configurations												
Traffic Vol, veh/h	55	285	100	45	315	80	50	40	25	55	35	55
Future Vol, veh/h	55	285	100	45	315	80	50	40	25	55	35	55
Conflicting Peds, #/hr	0	0	0	0	0	0	0	0	0	0	0	0
Sign Control	Free	Free	Free	Free	Free	Free	Stop	Stop	Stop	Stop	Stop	Stop
RT Channelized	-	-	None	-	-	None	-	-	None	-	-	None
Storage Length	175	-	-	150	-	125	-	-	-	100	-	-
Veh in Median Storage, #	-	0	-	-	0	-	-	0	-	-	0	-
Grade, %	-	0	-	-	0	-	-	0	-	-	0	-
Peak Hour Factor	82	82	82	82	82	82	82	82	82	82	82	82
Heavy Vehicles, %	2	2	2	2	2	2	1	1	1	1	1	1
Mvmt Flow	67	348	122	55	384	98	61	49	30	67	43	67

Major/Minor	Major1			Major2			Minor1			Minor2		
Conflicting Flow All	482	0	0	470	0	0	1141	1135	409	1077	1098	384
Stage 1	-	-	-	-	-	-	543	543	-	494	494	-
Stage 2	-	-	-	-	-	-	598	592	-	583	604	-
Critical Hdwy	4.12	-	-	4.12	-	-	7.11	6.51	6.21	7.11	6.51	6.21
Critical Hdwy Stg 1	-	-	-	-	-	-	6.11	5.51	-	6.11	5.51	-
Critical Hdwy Stg 2	-	-	-	-	-	-	6.11	5.51	-	6.11	5.51	-
Follow-up Hdwy	2.218	-	-	2.218	-	-	3.509	4.009	3.309	3.509	4.009	3.309
Pot Cap-1 Maneuver	1081	-	-	1092	-	-	179	203	645	197	214	666
Stage 1	-	-	-	-	-	-	526	521	-	559	548	-
Stage 2	-	-	-	-	-	-	491	496	-	500	489	-
Platoon blocked, %		-	-		-	-						
Mov Cap-1 Maneuver	1081	-	-	1092	-	-	123	181	645	137	191	666
Mov Cap-2 Maneuver	-	-	-	-	-	-	123	181	-	137	191	-
Stage 1	-	-	-	-	-	-	493	489	-	524	521	-
Stage 2	-	-	-	-	-	-	385	471	-	402	459	-

Approach	EB	WB	NB	SB
HCM Control Delay, s	1.1	0.9	80.2	33.3
HCM LOS			F	D

Minor Lane/Major Mvmt	NBLn1	EBL	EBT	EBR	WBL	WBT	WBR	SBLn1	SBLn2
Capacity (veh/h)	173	1081	-	-	1092	-	-	137	339
HCM Lane V/C Ratio	0.811	0.062	-	-	0.05	-	-	0.49	0.324
HCM Control Delay (s)	80.2	8.6	-	-	8.5	-	-	54.2	20.6
HCM Lane LOS	F	A	-	-	A	-	-	F	C
HCM 95th %tile Q(veh)	5.5	0.2	-	-	0.2	-	-	2.3	1.4

HCM 6th Signalized Intersection Summary
1: Jackson Dr & WIS-60

05/19/2020

Movement	EBL	EBT	EBR	WBL	WBT	WBR	NBL	NBT	NBR	SBL	SBT	SBR
Lane Configurations												
Traffic Volume (veh/h)	65	345	85	20	370	45	95	40	20	35	30	80
Future Volume (veh/h)	65	345	85	20	370	45	95	40	20	35	30	80
Initial Q (Qb), veh	0	0	0	0	0	0	0	0	0	0	0	0
Ped-Bike Adj(A_pbT)	1.00		1.00	1.00		1.00	1.00		1.00	1.00		1.00
Parking Bus, Adj	1.00	1.00	1.00	1.00	1.00	1.00	1.00	1.00	1.00	1.00	1.00	1.00
Work Zone On Approach		No			No			No			No	
Adj Sat Flow, veh/h/ln	1870	1659	1659	1870	1870	1870	1885	1672	1672	1870	1659	1659
Adj Flow Rate, veh/h	66	352	87	20	378	46	97	41	20	36	31	82
Peak Hour Factor	0.98	0.98	0.98	0.98	0.98	0.98	0.98	0.98	0.98	0.98	0.98	0.98
Percent Heavy Veh, %	2	2	2	2	2	2	1	1	1	2	2	2
Cap, veh/h	588	736	182	86	553	65	306	206	101	359	78	207
Arrive On Green	0.10	0.57	0.57	0.35	0.35	0.35	0.19	0.19	0.19	0.19	0.19	0.19
Sat Flow, veh/h	1781	1283	317	34	1581	187	1290	1061	518	1341	402	1065
Grp Volume(v), veh/h	66	0	439	444	0	0	97	0	61	36	0	113
Grp Sat Flow(s),veh/h/ln	1781	0	1601	1802	0	0	1290	0	1579	1341	0	1467
Q Serve(g_s), s	1.0	0.0	8.2	0.5	0.0	0.0	3.6	0.0	1.6	1.2	0.0	3.4
Cycle Q Clear(g_c), s	1.0	0.0	8.2	10.6	0.0	0.0	7.0	0.0	1.6	2.8	0.0	3.4
Prop In Lane	1.00		0.20	0.05		0.10	1.00		0.33	1.00		0.73
Lane Grp Cap(c), veh/h	588	0	917	704	0	0	306	0	307	359	0	285
V/C Ratio(X)	0.11	0.00	0.48	0.63	0.00	0.00	0.32	0.00	0.20	0.10	0.00	0.40
Avail Cap(c_a), veh/h	1295	0	2412	1649	0	0	945	0	1089	1023	0	1012
HCM Platoon Ratio	1.00	1.00	1.00	1.00	1.00	1.00	1.00	1.00	1.00	1.00	1.00	1.00
Upstream Filter(I)	1.00	0.00	1.00	1.00	0.00	0.00	1.00	0.00	1.00	1.00	0.00	1.00
Uniform Delay (d), s/veh	7.0	0.0	6.4	14.2	0.0	0.0	20.9	0.0	17.1	18.3	0.0	17.8
Incr Delay (d2), s/veh	0.0	0.0	0.6	1.4	0.0	0.0	0.2	0.0	0.1	0.0	0.0	0.3
Initial Q Delay(d3),s/veh	0.0	0.0	0.0	0.0	0.0	0.0	0.0	0.0	0.0	0.0	0.0	0.0
%ile BackOfQ(95%),veh/ln	0.6	0.0	3.9	7.4	0.0	0.0	1.9	0.0	1.0	0.6	0.0	2.0
Unsig. Movement Delay, s/veh												
LnGrp Delay(d),s/veh	7.0	0.0	6.9	15.5	0.0	0.0	21.1	0.0	17.2	18.4	0.0	18.2
LnGrp LOS	A	A	A	B	A	A	C	A	B	B	A	B
Approach Vol, veh/h		505			444			158			149	
Approach Delay, s/veh		7.0			15.5			19.6			18.2	
Approach LOS		A			B			B			B	

Timer - Assigned Phs	1	2		4		6		8
Phs Duration (G+Y+Rc), s	11.3	23.0		16.4		34.4		16.4
Change Period (Y+Rc), s	6.5	* 5.3		6.5		* 5.3		6.5
Max Green Setting (Gmax), s	25.0	* 45		35.0		* 77		35.0
Max Q Clear Time (g_c+I1), s	3.0	12.6		9.0		10.2		5.4
Green Ext Time (p_c), s	0.0	4.9		0.3		5.3		0.4

Intersection Summary	
HCM 6th Ctrl Delay	12.9
HCM 6th LOS	B

Notes

* HCM 6th computational engine requires equal clearance times for the phases crossing the barrier.

Intersection	
Int Delay, s/veh	0

Movement	EBL	EBT	WBT	WBR	SBL	SBR
Lane Configurations						
Traffic Vol, veh/h	0	400	435	0	0	0
Future Vol, veh/h	0	400	435	0	0	0
Conflicting Peds, #/hr	0	0	0	0	0	0
Sign Control	Free	Free	Free	Free	Stop	Stop
RT Channelized	-	None	-	None	-	None
Storage Length	-	-	-	-	0	-
Veh in Median Storage, #	-	0	0	-	0	-
Grade, %	-	0	0	-	0	-
Peak Hour Factor	92	92	92	92	92	92
Heavy Vehicles, %	3	3	2	2	2	2
Mvmt Flow	0	435	473	0	0	0

Major/Minor	Major1		Major2		Minor2	
Conflicting Flow All	473	0	-	0	908	473
Stage 1	-	-	-	-	473	-
Stage 2	-	-	-	-	435	-
Critical Hdwy	4.13	-	-	-	6.42	6.22
Critical Hdwy Stg 1	-	-	-	-	5.42	-
Critical Hdwy Stg 2	-	-	-	-	5.42	-
Follow-up Hdwy	2.227	-	-	-	3.518	3.318
Pot Cap-1 Maneuver	1084	-	-	-	306	591
Stage 1	-	-	-	-	627	-
Stage 2	-	-	-	-	653	-
Platoon blocked, %		-	-	-		
Mov Cap-1 Maneuver	1084	-	-	-	306	591
Mov Cap-2 Maneuver	-	-	-	-	306	-
Stage 1	-	-	-	-	627	-
Stage 2	-	-	-	-	653	-

Approach	EB	WB	SB
HCM Control Delay, s	0	0	0
HCM LOS			A

Minor Lane/Major Mvmt	EBL	EBT	WBT	WBR	SBLn1
Capacity (veh/h)	1084	-	-	-	-
HCM Lane V/C Ratio	-	-	-	-	-
HCM Control Delay (s)	0	-	-	-	0
HCM Lane LOS	A	-	-	-	A
HCM 95th %tile Q(veh)	0	-	-	-	-

Intersection	
Int Delay, s/veh	1.9

Movement	EBL	EBT	EBR	WBL	WBT	WBR	NBL	NBT	NBR	SBL	SBT	SBR
Lane Configurations												
Traffic Vol, veh/h	20	340	40	0	365	20	35	0	0	20	0	35
Future Vol, veh/h	20	340	40	0	365	20	35	0	0	20	0	35
Conflicting Peds, #/hr	1	0	0	0	0	1	0	0	0	0	0	0
Sign Control	Free	Free	Free	Free	Free	Free	Stop	Stop	Stop	Stop	Stop	Stop
RT Channelized	-	-	None	-	-	None	-	-	None	-	-	None
Storage Length	-	-	-	-	-	-	-	-	-	-	-	-
Veh in Median Storage, #	-	0	-	-	0	-	-	0	-	-	0	-
Grade, %	-	0	-	-	0	-	-	0	-	-	0	-
Peak Hour Factor	94	94	94	94	94	94	94	94	94	94	94	94
Heavy Vehicles, %	3	3	3	3	3	3	2	2	2	2	2	2
Mvmt Flow	21	362	43	0	388	21	37	0	0	21	0	37

Major/Minor	Major1			Major2			Minor1			Minor2		
Conflicting Flow All	410	0	0	405	0	0	843	836	384	826	847	400
Stage 1	-	-	-	-	-	-	426	426	-	400	400	-
Stage 2	-	-	-	-	-	-	417	410	-	426	447	-
Critical Hdwy	4.13	-	-	4.13	-	-	7.12	6.52	6.22	7.12	6.52	6.22
Critical Hdwy Stg 1	-	-	-	-	-	-	6.12	5.52	-	6.12	5.52	-
Critical Hdwy Stg 2	-	-	-	-	-	-	6.12	5.52	-	6.12	5.52	-
Follow-up Hdwy	2.227	-	-	2.227	-	-	3.518	4.018	3.318	3.518	4.018	3.318
Pot Cap-1 Maneuver	1143	-	-	1148	-	-	284	303	664	291	299	650
Stage 1	-	-	-	-	-	-	606	586	-	626	602	-
Stage 2	-	-	-	-	-	-	613	595	-	606	573	-
Platoon blocked, %		-	-		-	-						
Mov Cap-1 Maneuver	1142	-	-	1148	-	-	263	295	664	285	292	649
Mov Cap-2 Maneuver	-	-	-	-	-	-	263	295	-	285	292	-
Stage 1	-	-	-	-	-	-	591	572	-	610	601	-
Stage 2	-	-	-	-	-	-	578	594	-	591	559	-

Approach	EB	WB	NB	SB
HCM Control Delay, s	0.4	0	20.9	14.4
HCM LOS			C	B

Minor Lane/Major Mvmt	NBLn1	EBL	EBT	EBR	WBL	WBT	WBR	SBLn1
Capacity (veh/h)	263	1142	-	-	1148	-	-	443
HCM Lane V/C Ratio	0.142	0.019	-	-	-	-	-	0.132
HCM Control Delay (s)	20.9	8.2	0	-	0	-	-	14.4
HCM Lane LOS	C	A	A	-	A	-	-	B
HCM 95th %tile Q(veh)	0.5	0.1	-	-	0	-	-	0.5

Intersection	
Int Delay, s/veh	0

Movement	EBL	EBT	WBT	WBR	SBL	SBR
Lane Configurations		↑	↑		⋔	
Traffic Vol, veh/h	0	360	385	0	0	0
Future Vol, veh/h	0	360	385	0	0	0
Conflicting Peds, #/hr	0	0	0	0	0	0
Sign Control	Free	Free	Free	Free	Stop	Stop
RT Channelized	-	None	-	None	-	None
Storage Length	-	-	-	-	0	-
Veh in Median Storage, #	-	0	0	-	0	-
Grade, %	-	0	0	-	0	-
Peak Hour Factor	92	92	92	92	92	92
Heavy Vehicles, %	2	2	3	3	2	2
Mvmt Flow	0	391	418	0	0	0

Major/Minor	Major1		Major2		Minor2	
Conflicting Flow All	-	0	-	0	809	418
Stage 1	-	-	-	-	418	-
Stage 2	-	-	-	-	391	-
Critical Hdwy	-	-	-	-	6.42	6.22
Critical Hdwy Stg 1	-	-	-	-	5.42	-
Critical Hdwy Stg 2	-	-	-	-	5.42	-
Follow-up Hdwy	-	-	-	-	3.518	3.318
Pot Cap-1 Maneuver	0	-	-	0	350	635
Stage 1	0	-	-	0	664	-
Stage 2	0	-	-	0	683	-
Platoon blocked, %		-	-			
Mov Cap-1 Maneuver	-	-	-	-	350	635
Mov Cap-2 Maneuver	-	-	-	-	350	-
Stage 1	-	-	-	-	664	-
Stage 2	-	-	-	-	683	-

Approach	EB	WB	SB
HCM Control Delay, s	0	0	0
HCM LOS			A

Minor Lane/Major Mvmt	EBT	WBT	SBLn1
Capacity (veh/h)	-	-	-
HCM Lane V/C Ratio	-	-	-
HCM Control Delay (s)	-	-	0
HCM Lane LOS	-	-	A
HCM 95th %tile Q(veh)	-	-	-

Intersection	
Int Delay, s/veh	0

Movement	EBT	EBR	WBL	WBT	NBL	NBR
Lane Configurations	↑			↑	⋔	
Traffic Vol, veh/h	360	0	0	385	0	0
Future Vol, veh/h	360	0	0	385	0	0
Conflicting Peds, #/hr	0	0	0	0	0	0
Sign Control	Free	Free	Free	Free	Stop	Stop
RT Channelized	-	None	-	None	-	None
Storage Length	-	-	-	-	0	-
Veh in Median Storage, #	0	-	-	0	0	-
Grade, %	0	-	-	0	0	-
Peak Hour Factor	92	92	92	92	92	92
Heavy Vehicles, %	2	2	3	3	2	2
Mvmt Flow	391	0	0	418	0	0

Major/Minor	Major1		Major2		Minor1	
Conflicting Flow All	0	-	-	-	809	391
Stage 1	-	-	-	-	391	-
Stage 2	-	-	-	-	418	-
Critical Hdwy	-	-	-	-	6.42	6.22
Critical Hdwy Stg 1	-	-	-	-	5.42	-
Critical Hdwy Stg 2	-	-	-	-	5.42	-
Follow-up Hdwy	-	-	-	-	3.518	3.318
Pot Cap-1 Maneuver	-	0	0	-	350	658
Stage 1	-	0	0	-	683	-
Stage 2	-	0	0	-	664	-
Platoon blocked, %	-			-		
Mov Cap-1 Maneuver	-	-	-	-	350	658
Mov Cap-2 Maneuver	-	-	-	-	350	-
Stage 1	-	-	-	-	683	-
Stage 2	-	-	-	-	664	-

Approach	EB	WB	NB
HCM Control Delay, s	0	0	0
HCM LOS			A

Minor Lane/Major Mvmt	NBLn1	EBT	WBT
Capacity (veh/h)	-	-	-
HCM Lane V/C Ratio	-	-	-
HCM Control Delay (s)	0	-	-
HCM Lane LOS	A	-	-
HCM 95th %tile Q(veh)	-	-	-

Intersection	
Int Delay, s/veh	6

Movement	EBL	EBT	EBR	WBL	WBT	WBR	NBL	NBT	NBR	SBL	SBT	SBR
Lane Configurations												
Traffic Vol, veh/h	50	240	70	30	260	40	50	25	20	55	30	75
Future Vol, veh/h	50	240	70	30	260	40	50	25	20	55	30	75
Conflicting Peds, #/hr	0	0	0	0	0	0	0	0	0	0	0	0
Sign Control	Free	Free	Free	Free	Free	Free	Stop	Stop	Stop	Stop	Stop	Stop
RT Channelized	-	-	None	-	-	None	-	-	None	-	-	None
Storage Length	175	-	-	150	-	125	-	-	-	100	-	-
Veh in Median Storage, #	-	0	-	-	0	-	-	0	-	-	0	-
Grade, %	-	0	-	-	0	-	-	0	-	-	0	-
Peak Hour Factor	92	92	92	92	92	92	92	92	92	92	92	92
Heavy Vehicles, %	2	2	2	3	3	3	2	2	2	1	1	1
Mvmt Flow	54	261	76	33	283	43	54	27	22	60	33	82

Major/Minor	Major1			Major2			Minor1			Minor2		
Conflicting Flow All	326	0	0	337	0	0	835	799	299	781	794	283
Stage 1	-	-	-	-	-	-	407	407	-	349	349	-
Stage 2	-	-	-	-	-	-	428	392	-	432	445	-
Critical Hdwy	4.12	-	-	4.13	-	-	7.12	6.52	6.22	7.11	6.51	6.21
Critical Hdwy Stg 1	-	-	-	-	-	-	6.12	5.52	-	6.11	5.51	-
Critical Hdwy Stg 2	-	-	-	-	-	-	6.12	5.52	-	6.11	5.51	-
Follow-up Hdwy	2.218	-	-	2.227	-	-	3.518	4.018	3.318	3.509	4.009	3.309
Pot Cap-1 Maneuver	1234	-	-	1217	-	-	287	319	741	313	322	758
Stage 1	-	-	-	-	-	-	621	597	-	669	635	-
Stage 2	-	-	-	-	-	-	605	606	-	604	576	-
Platoon blocked, %		-	-		-	-						
Mov Cap-1 Maneuver	1234	-	-	1217	-	-	222	297	741	268	299	758
Mov Cap-2 Maneuver	-	-	-	-	-	-	222	297	-	268	299	-
Stage 1	-	-	-	-	-	-	594	571	-	640	618	-
Stage 2	-	-	-	-	-	-	498	590	-	534	551	-

Approach	EB	WB	NB	SB
HCM Control Delay, s	1.1	0.7	25	16.6
HCM LOS			D	C

Minor Lane/Major Mvmt	NBLn1	EBL	EBT	EBR	WBL	WBT	WBR	SBLn1	SBLn2
Capacity (veh/h)	282	1234	-	-	1217	-	-	268	527
HCM Lane V/C Ratio	0.366	0.044	-	-	0.027	-	-	0.223	0.217
HCM Control Delay (s)	25	8.1	-	-	8	-	-	22.2	13.7
HCM Lane LOS	D	A	-	-	A	-	-	C	B
HCM 95th %tile Q(veh)	1.6	0.1	-	-	0.1	-	-	0.8	0.8

HCM 6th Signalized Intersection Summary
1: Jackson Dr & WIS-60

05/19/2020

Movement	EBL	EBT	EBR	WBL	WBT	WBR	NBL	NBT	NBR	SBL	SBT	SBR
Lane Configurations												
Traffic Volume (veh/h)	70	480	30	40	455	45	115	55	60	85	25	185
Future Volume (veh/h)	70	480	30	40	455	45	115	55	60	85	25	185
Initial Q (Qb), veh	0	0	0	0	0	0	0	0	0	0	0	0
Ped-Bike Adj(A_pbT)	1.00		1.00	1.00		1.00	1.00		0.97	1.00		0.99
Parking Bus, Adj	1.00	1.00	1.00	1.00	1.00	1.00	1.00	1.00	1.00	1.00	1.00	1.00
Work Zone On Approach		No			No			No			No	
Adj Sat Flow, veh/h/ln	1752	1554	1554	1767	1767	1767	1826	1619	1619	1856	1646	1646
Adj Flow Rate, veh/h	73	500	31	42	474	47	120	57	62	89	26	193
Peak Hour Factor	0.96	0.96	0.96	0.96	0.96	0.96	0.96	0.96	0.96	0.96	0.96	0.96
Percent Heavy Veh, %	10	10	10	9	9	9	5	5	5	3	3	3
Cap, veh/h	420	828	51	81	584	56	252	190	207	356	46	340
Arrive On Green	0.08	0.57	0.57	0.40	0.40	0.40	0.27	0.27	0.27	0.27	0.27	0.27
Sat Flow, veh/h	1668	1447	90	74	1445	138	1131	698	759	1258	168	1245
Grp Volume(v), veh/h	73	0	531	563	0	0	120	0	119	89	0	219
Grp Sat Flow(s),veh/h/ln	1668	0	1537	1657	0	0	1131	0	1457	1258	0	1413
Q Serve(g_s), s	1.7	0.0	17.2	11.1	0.0	0.0	7.8	0.0	4.9	4.6	0.0	10.1
Cycle Q Clear(g_c), s	1.7	0.0	17.2	23.0	0.0	0.0	17.9	0.0	4.9	9.5	0.0	10.1
Prop In Lane	1.00		0.06	0.07		0.08	1.00		0.52	1.00		0.88
Lane Grp Cap(c), veh/h	420	0	879	720	0	0	252	0	397	356	0	385
V/C Ratio(X)	0.17	0.00	0.60	0.78	0.00	0.00	0.48	0.00	0.30	0.25	0.00	0.57
Avail Cap(c_a), veh/h	830	0	1546	1021	0	0	464	0	670	592	0	650
HCM Platoon Ratio	1.00	1.00	1.00	1.00	1.00	1.00	1.00	1.00	1.00	1.00	1.00	1.00
Upstream Filter(I)	1.00	0.00	1.00	1.00	0.00	0.00	1.00	0.00	1.00	1.00	0.00	1.00
Uniform Delay (d), s/veh	9.4	0.0	10.6	20.1	0.0	0.0	31.5	0.0	21.9	25.7	0.0	23.8
Incr Delay (d2), s/veh	0.1	0.0	1.0	3.4	0.0	0.0	0.5	0.0	0.2	0.1	0.0	0.5
Initial Q Delay(d3),s/veh	0.0	0.0	0.0	0.0	0.0	0.0	0.0	0.0	0.0	0.0	0.0	0.0
%ile BackOfQ(95%),veh/ln	1.1	0.0	9.2	14.0	0.0	0.0	3.8	0.0	3.0	2.4	0.0	6.0
Unsig. Movement Delay, s/veh												
LnGrp Delay(d),s/veh	9.5	0.0	11.6	23.5	0.0	0.0	32.0	0.0	22.1	25.8	0.0	24.3
LnGrp LOS	A	A	B	C	A	A	C	A	C	C	A	C
Approach Vol, veh/h		604			563			239			308	
Approach Delay, s/veh		11.4			23.5			27.1			24.7	
Approach LOS		B			C			C			C	

Timer - Assigned Phs	1	2		4		6		8
Phs Duration (G+Y+Rc), s	12.8	36.0		27.2		48.8		27.2
Change Period (Y+Rc), s	6.5	* 5.3		6.5		* 5.3		6.5
Max Green Setting (Gmax), s	25.0	* 45		35.0		* 77		35.0
Max Q Clear Time (g_c+I1), s	3.7	25.0		19.9		19.2		12.1
Green Ext Time (p_c), s	0.0	5.8		0.5		6.7		0.8

Intersection Summary	
HCM 6th Ctrl Delay	19.9
HCM 6th LOS	B

Notes

* HCM 6th computational engine requires equal clearance times for the phases crossing the barrier.

Intersection	
Int Delay, s/veh	2.8

Movement	EBL	EBT	WBT	WBR	SBL	SBR
Lane Configurations						
Traffic Vol, veh/h	80	545	475	35	40	65
Future Vol, veh/h	80	545	475	35	40	65
Conflicting Peds, #/hr	0	0	0	0	0	0
Sign Control	Free	Free	Free	Free	Stop	Stop
RT Channelized	-	None	-	None	-	None
Storage Length	-	-	-	-	0	-
Veh in Median Storage, #	-	0	0	-	0	-
Grade, %	-	0	0	-	0	-
Peak Hour Factor	92	92	92	92	92	92
Heavy Vehicles, %	4	4	9	9	2	2
Mvmt Flow	87	592	516	38	43	71

Major/Minor	Major1		Major2		Minor2	
Conflicting Flow All	554	0	-	0	1301	535
Stage 1	-	-	-	-	535	-
Stage 2	-	-	-	-	766	-
Critical Hdwy	4.14	-	-	-	6.42	6.22
Critical Hdwy Stg 1	-	-	-	-	5.42	-
Critical Hdwy Stg 2	-	-	-	-	5.42	-
Follow-up Hdwy	2.236	-	-	-	3.518	3.318
Pot Cap-1 Maneuver	1006	-	-	-	178	545
Stage 1	-	-	-	-	587	-
Stage 2	-	-	-	-	459	-
Platoon blocked, %		-	-	-		
Mov Cap-1 Maneuver	1006	-	-	-	155	545
Mov Cap-2 Maneuver	-	-	-	-	155	-
Stage 1	-	-	-	-	511	-
Stage 2	-	-	-	-	459	-

Approach	EB	WB	SB
HCM Control Delay, s	1.1	0	26.7
HCM LOS			D

Minor Lane/Major Mvmt	EBL	EBT	WBT	WBR	SBLn1
Capacity (veh/h)	1006	-	-	-	278
HCM Lane V/C Ratio	0.086	-	-	-	0.411
HCM Control Delay (s)	8.9	0	-	-	26.7
HCM Lane LOS	A	A	-	-	D
HCM 95th %tile Q(veh)	0.3	-	-	-	1.9

Intersection	
Int Delay, s/veh	19.6

Movement	EBL	EBT	EBR	WBL	WBT	WBR	NBL	NBT	NBR	SBL	SBT	SBR
Lane Configurations												
Traffic Vol, veh/h	10	430	145	40	340	15	110	0	30	75	0	60
Future Vol, veh/h	10	430	145	40	340	15	110	0	30	75	0	60
Conflicting Peds, #/hr	0	0	0	0	0	0	0	0	0	0	0	0
Sign Control	Free	Free	Free	Free	Free	Free	Stop	Stop	Stop	Stop	Stop	Stop
RT Channelized	-	-	None	-	-	None	-	-	None	-	-	None
Storage Length	-	-	-	-	-	-	-	-	-	-	-	-
Veh in Median Storage, #	-	0	-	-	0	-	-	0	-	-	0	-
Grade, %	-	0	-	-	0	-	-	0	-	-	0	-
Peak Hour Factor	84	84	84	84	84	84	84	84	84	84	84	84
Heavy Vehicles, %	4	4	4	6	6	6	2	2	2	1	1	1
Mvmt Flow	12	512	173	48	405	18	131	0	36	89	0	71

Major/Minor	Major1			Major2			Minor1			Minor2		
Conflicting Flow All	423	0	0	685	0	0	1169	1142	599	1151	1219	414
Stage 1	-	-	-	-	-	-	623	623	-	510	510	-
Stage 2	-	-	-	-	-	-	546	519	-	641	709	-
Critical Hdwy	4.14	-	-	4.16	-	-	7.12	6.52	6.22	7.11	6.51	6.21
Critical Hdwy Stg 1	-	-	-	-	-	-	6.12	5.52	-	6.11	5.51	-
Critical Hdwy Stg 2	-	-	-	-	-	-	6.12	5.52	-	6.11	5.51	-
Follow-up Hdwy	2.236	-	-	2.254	-	-	3.518	4.018	3.318	3.509	4.009	3.309
Pot Cap-1 Maneuver	1126	-	-	890	-	-	170	200	502	176	181	640
Stage 1	-	-	-	-	-	-	474	478	-	548	539	-
Stage 2	-	-	-	-	-	-	522	533	-	465	439	-
Platoon blocked, %		-	-		-	-						
Mov Cap-1 Maneuver	1126	-	-	890	-	-	141	182	502	153	165	640
Mov Cap-2 Maneuver	-	-	-	-	-	-	141	182	-	153	165	-
Stage 1	-	-	-	-	-	-	465	469	-	538	501	-
Stage 2	-	-	-	-	-	-	431	495	-	424	431	-

Approach	EB	WB	NB	SB
HCM Control Delay, s	0.1	0.9	124.5	49.9
HCM LOS			F	E

Minor Lane/Major Mvmt	NBLn1	EBL	EBT	EBR	WBL	WBT	WBR	SBLn1
Capacity (veh/h)	167	1126	-	-	890	-	-	231
HCM Lane V/C Ratio	0.998	0.011	-	-	0.054	-	-	0.696
HCM Control Delay (s)	124.5	8.2	0	-	9.3	0	-	49.9
HCM Lane LOS	F	A	A	-	A	A	-	E
HCM 95th %tile Q(veh)	7.9	0	-	-	0.2	-	-	4.5

Intersection	
Int Delay, s/veh	0.3

Movement	EBL	EBT	WBT	WBR	SBL	SBR
Lane Configurations		↑	↑		⋔	
Traffic Vol, veh/h	25	510	385	5	0	10
Future Vol, veh/h	25	510	385	5	0	10
Conflicting Peds, #/hr	0	0	0	0	0	0
Sign Control	Free	Free	Free	Free	Stop	Stop
RT Channelized	-	None	-	None	-	None
Storage Length	-	-	-	-	0	-
Veh in Median Storage, #	-	0	0	-	0	-
Grade, %	-	0	0	-	0	-
Peak Hour Factor	92	92	92	92	92	92
Heavy Vehicles, %	6	6	6	6	2	2
Mvmt Flow	27	554	418	5	0	11

Major/Minor	Major1		Major2		Minor2	
Conflicting Flow All	423	0	-	0	1029	421
Stage 1	-	-	-	-	421	-
Stage 2	-	-	-	-	608	-
Critical Hdwy	4.16	-	-	-	6.42	6.22
Critical Hdwy Stg 1	-	-	-	-	5.42	-
Critical Hdwy Stg 2	-	-	-	-	5.42	-
Follow-up Hdwy	2.254	-	-	-	3.518	3.318
Pot Cap-1 Maneuver	1115	-	-	-	259	632
Stage 1	-	-	-	-	662	-
Stage 2	-	-	-	-	543	-
Platoon blocked, %		-	-	-		
Mov Cap-1 Maneuver	1115	-	-	-	250	632
Mov Cap-2 Maneuver	-	-	-	-	250	-
Stage 1	-	-	-	-	639	-
Stage 2	-	-	-	-	543	-

Approach	EB	WB	SB
HCM Control Delay, s	0.4	0	10.8
HCM LOS			B

Minor Lane/Major Mvmt	EBL	EBT	WBT	WBR	SBLn1
Capacity (veh/h)	1115	-	-	-	632
HCM Lane V/C Ratio	0.024	-	-	-	0.017
HCM Control Delay (s)	8.3	-	-	-	10.8
HCM Lane LOS	A	-	-	-	B
HCM 95th %tile Q(veh)	0.1	-	-	-	0.1

Intersection	
Int Delay, s/veh	0

Movement	EBT	EBR	WBL	WBT	NBL	NBR
Lane Configurations	↑			↑	⋔	
Traffic Vol, veh/h	510	0	0	390	0	0
Future Vol, veh/h	510	0	0	390	0	0
Conflicting Peds, #/hr	0	0	0	0	0	0
Sign Control	Free	Free	Free	Free	Stop	Stop
RT Channelized	-	None	-	None	-	None
Storage Length	-	-	-	-	0	-
Veh in Median Storage, #	0	-	-	0	0	-
Grade, %	0	-	-	0	0	-
Peak Hour Factor	92	92	92	92	92	92
Heavy Vehicles, %	6	6	6	6	2	2
Mvmt Flow	554	0	0	424	0	0

Major/Minor	Major1		Major2		Minor1	
Conflicting Flow All	0	-	-	-	978	554
Stage 1	-	-	-	-	554	-
Stage 2	-	-	-	-	424	-
Critical Hdwy	-	-	-	-	6.42	6.22
Critical Hdwy Stg 1	-	-	-	-	5.42	-
Critical Hdwy Stg 2	-	-	-	-	5.42	-
Follow-up Hdwy	-	-	-	-	3.518	3.318
Pot Cap-1 Maneuver	-	0	0	-	278	532
Stage 1	-	0	0	-	575	-
Stage 2	-	0	0	-	660	-
Platoon blocked, %	-			-		
Mov Cap-1 Maneuver	-	-	-	-	278	532
Mov Cap-2 Maneuver	-	-	-	-	278	-
Stage 1	-	-	-	-	575	-
Stage 2	-	-	-	-	660	-

Approach	EB	WB	NB
HCM Control Delay, s	0	0	0
HCM LOS			A

Minor Lane/Major Mvmt	NBLn1	EBT	WBT
Capacity (veh/h)	-	-	-
HCM Lane V/C Ratio	-	-	-
HCM Control Delay (s)	0	-	-
HCM Lane LOS	A	-	-
HCM 95th %tile Q(veh)	-	-	-

Intersection	
Int Delay, s/veh	12.8

Movement	EBL	EBT	EBR	WBL	WBT	WBR	NBL	NBT	NBR	SBL	SBT	SBR
Lane Configurations												
Traffic Vol, veh/h	75	385	50	35	280	90	35	25	50	80	15	75
Future Vol, veh/h	75	385	50	35	280	90	35	25	50	80	15	75
Conflicting Peds, #/hr	0	0	1	1	0	0	0	0	0	0	0	0
Sign Control	Free	Free	Free	Free	Free	Free	Stop	Stop	Stop	Stop	Stop	Stop
RT Channelized	-	-	None	-	-	None	-	-	None	-	-	None
Storage Length	175	-	-	150	-	125	-	-	-	100	-	-
Veh in Median Storage, #	-	0	-	-	0	-	-	0	-	-	0	-
Grade, %	-	0	-	-	0	-	-	0	-	-	0	-
Peak Hour Factor	84	84	84	84	84	84	84	84	84	84	84	84
Heavy Vehicles, %	6	6	6	4	4	4	7	7	7	6	6	6
Mvmt Flow	89	458	60	42	333	107	42	30	60	95	18	89

Major/Minor	Major1			Major2			Minor1			Minor2		
Conflicting Flow All	440	0	0	519	0	0	1191	1191	489	1128	1114	333
Stage 1	-	-	-	-	-	-	667	667	-	417	417	-
Stage 2	-	-	-	-	-	-	524	524	-	711	697	-
Critical Hdwy	4.16	-	-	4.14	-	-	7.17	6.57	6.27	7.16	6.56	6.26
Critical Hdwy Stg 1	-	-	-	-	-	-	6.17	5.57	-	6.16	5.56	-
Critical Hdwy Stg 2	-	-	-	-	-	-	6.17	5.57	-	6.16	5.56	-
Follow-up Hdwy	2.254	-	-	2.236	-	-	3.563	4.063	3.363	3.554	4.054	3.354
Pot Cap-1 Maneuver	1099	-	-	1037	-	-	160	183	569	178	205	700
Stage 1	-	-	-	-	-	-	440	449	-	605	584	-
Stage 2	-	-	-	-	-	-	527	522	-	418	437	-
Platoon blocked, %		-	-		-	-						
Mov Cap-1 Maneuver	1099	-	-	1036	-	-	117	161	568	125	180	700
Mov Cap-2 Maneuver	-	-	-	-	-	-	117	161	-	125	180	-
Stage 1	-	-	-	-	-	-	404	412	-	556	560	-
Stage 2	-	-	-	-	-	-	427	501	-	319	401	-

Approach	EB	WB	NB	SB
HCM Control Delay, s	1.3	0.7	50.2	51.6
HCM LOS			F	F

Minor Lane/Major Mvmt	NBLn1	EBL	EBT	EBR	WBL	WBT	WBR	SBLn1	SBLn2
Capacity (veh/h)	203	1099	-	-	1036	-	-	125	473
HCM Lane V/C Ratio	0.645	0.081	-	-	0.04	-	-	0.762	0.227
HCM Control Delay (s)	50.2	8.6	-	-	8.6	-	-	93.1	14.8
HCM Lane LOS	F	A	-	-	A	-	-	F	B
HCM 95th %tile Q(veh)	3.8	0.3	-	-	0.1	-	-	4.4	0.9

HCM 6th Signalized Intersection Summary
1: Jackson Dr & WIS-60

05/19/2020

Movement	EBL	EBT	EBR	WBL	WBT	WBR	NBL	NBT	NBR	SBL	SBT	SBR
Lane Configurations												
Traffic Volume (veh/h)	180	565	125	50	490	100	75	80	55	85	65	105
Future Volume (veh/h)	180	565	125	50	490	100	75	80	55	85	65	105
Initial Q (Qb), veh	0	0	0	0	0	0	0	0	0	0	0	0
Ped-Bike Adj(A_pbT)	1.00		0.98	1.00		0.98	0.99		0.99	0.99		0.97
Parking Bus, Adj	1.00	1.00	1.00	1.00	1.00	1.00	1.00	1.00	1.00	1.00	1.00	1.00
Work Zone On Approach		No			No			No			No	
Adj Sat Flow, veh/h/ln	1856	1646	1646	1841	1841	1841	1856	1646	1646	1885	1672	1672
Adj Flow Rate, veh/h	194	608	134	54	527	108	81	86	59	91	70	113
Peak Hour Factor	0.93	0.93	0.93	0.93	0.93	0.93	0.93	0.93	0.93	0.93	0.93	0.93
Percent Heavy Veh, %	3	3	3	4	4	4	3	3	3	1	1	1
Cap, veh/h	438	833	184	86	610	121	212	196	135	254	122	197
Arrive On Green	0.10	0.64	0.64	0.47	0.47	0.47	0.22	0.22	0.22	0.22	0.22	0.22
Sat Flow, veh/h	1767	1300	287	84	1308	259	1185	906	621	1245	564	910
Grp Volume(v), veh/h	194	0	742	689	0	0	81	0	145	91	0	183
Grp Sat Flow(s),veh/h/ln	1767	0	1587	1651	0	0	1185	0	1527	1245	0	1474
Q Serve(g_s), s	4.2	0.0	26.1	18.7	0.0	0.0	5.4	0.0	6.8	5.6	0.0	9.2
Cycle Q Clear(g_c), s	4.2	0.0	26.1	31.1	0.0	0.0	14.6	0.0	6.8	12.4	0.0	9.2
Prop In Lane	1.00		0.18	0.08		0.16	1.00		0.41	1.00		0.62
Lane Grp Cap(c), veh/h	438	0	1017	818	0	0	212	0	331	254	0	319
V/C Ratio(X)	0.44	0.00	0.73	0.84	0.00	0.00	0.38	0.00	0.44	0.36	0.00	0.57
Avail Cap(c_a), veh/h	803	0	1467	940	0	0	457	0	646	511	0	624
HCM Platoon Ratio	1.00	1.00	1.00	1.00	1.00	1.00	1.00	1.00	1.00	1.00	1.00	1.00
Upstream Filter(I)	1.00	0.00	1.00	1.00	0.00	0.00	1.00	0.00	1.00	1.00	0.00	1.00
Uniform Delay (d), s/veh	7.9	0.0	10.0	19.7	0.0	0.0	35.5	0.0	28.1	33.4	0.0	29.0
Incr Delay (d2), s/veh	0.3	0.0	1.5	6.8	0.0	0.0	0.4	0.0	0.3	0.3	0.0	0.6
Initial Q Delay(d3),s/veh	0.0	0.0	0.0	0.0	0.0	0.0	0.0	0.0	0.0	0.0	0.0	0.0
%ile BackOfQ(95%),veh/ln	2.7	0.0	13.0	18.6	0.0	0.0	2.8	0.0	4.5	3.1	0.0	5.9
Unsig. Movement Delay, s/veh												
LnGrp Delay(d),s/veh	8.2	0.0	11.6	26.5	0.0	0.0	35.9	0.0	28.4	33.8	0.0	29.6
LnGrp LOS	A	A	B	C	A	A	D	A	C	C	A	C
Approach Vol, veh/h		936			689			226			274	
Approach Delay, s/veh		10.9			26.5			31.1			31.0	
Approach LOS		B			C			C			C	

Timer - Assigned Phs	1	2		4		6		8
Phs Duration (G+Y+Rc), s	14.4	43.9		24.4		58.3		24.4
Change Period (Y+Rc), s	6.5	* 5.3		6.5		* 5.3		6.5
Max Green Setting (Gmax), s	25.0	* 45		35.0		* 77		35.0
Max Q Clear Time (g_c+I1), s	6.2	33.1		16.6		28.1		14.4
Green Ext Time (p_c), s	0.2	5.5		0.5		11.1		0.7

Intersection Summary	
HCM 6th Ctrl Delay	20.7
HCM 6th LOS	C

Notes

* HCM 6th computational engine requires equal clearance times for the phases crossing the barrier.

Intersection	
Int Delay, s/veh	1.4

Movement	EBL	EBT	WBT	WBR	SBL	SBR
Lane Configurations						
Traffic Vol, veh/h	35	670	610	10	25	30
Future Vol, veh/h	35	670	610	10	25	30
Conflicting Peds, #/hr	0	0	0	0	0	0
Sign Control	Free	Free	Free	Free	Stop	Stop
RT Channelized	-	None	-	None	-	None
Storage Length	-	-	-	-	0	-
Veh in Median Storage, #	-	0	0	-	0	-
Grade, %	-	0	0	-	0	-
Peak Hour Factor	92	92	92	92	92	92
Heavy Vehicles, %	3	3	4	4	2	2
Mvmt Flow	38	728	663	11	27	33

Major/Minor	Major1		Major2		Minor2	
Conflicting Flow All	674	0	-	0	1473	669
Stage 1	-	-	-	-	669	-
Stage 2	-	-	-	-	804	-
Critical Hdwy	4.13	-	-	-	6.42	6.22
Critical Hdwy Stg 1	-	-	-	-	5.42	-
Critical Hdwy Stg 2	-	-	-	-	5.42	-
Follow-up Hdwy	2.227	-	-	-	3.518	3.318
Pot Cap-1 Maneuver	912	-	-	-	140	458
Stage 1	-	-	-	-	509	-
Stage 2	-	-	-	-	440	-
Platoon blocked, %		-	-	-		
Mov Cap-1 Maneuver	912	-	-	-	130	458
Mov Cap-2 Maneuver	-	-	-	-	130	-
Stage 1	-	-	-	-	473	-
Stage 2	-	-	-	-	440	-

Approach	EB	WB	SB
HCM Control Delay, s	0.5	0	28.4
HCM LOS			D

Minor Lane/Major Mvmt	EBL	EBT	WBT	WBR	SBLn1
Capacity (veh/h)	912	-	-	-	213
HCM Lane V/C Ratio	0.042	-	-	-	0.281
HCM Control Delay (s)	9.1	0	-	-	28.4
HCM Lane LOS	A	A	-	-	D
HCM 95th %tile Q(veh)	0.1	-	-	-	1.1

Intersection	
Int Delay, s/veh	101.6

Movement	EBL	EBT	EBR	WBL	WBT	WBR	NBL	NBT	NBR	SBL	SBT	SBR
Lane Configurations												
Traffic Vol, veh/h	50	450	195	40	420	45	190	0	60	20	0	10
Future Vol, veh/h	50	450	195	40	420	45	190	0	60	20	0	10
Conflicting Peds, #/hr	1	0	0	0	0	1	0	0	0	0	0	0
Sign Control	Free	Free	Free	Free	Free	Free	Stop	Stop	Stop	Stop	Stop	Stop
RT Channelized	-	-	None	-	-	None	-	-	None	-	-	None
Storage Length	-	-	-	-	-	-	-	-	-	-	-	-
Veh in Median Storage, #	-	0	-	-	0	-	-	0	-	-	0	-
Grade, %	-	0	-	-	0	-	-	0	-	-	0	-
Peak Hour Factor	87	87	87	87	87	87	87	87	87	87	87	87
Heavy Vehicles, %	3	3	3	4	4	4	2	2	2	1	1	1
Mvmt Flow	57	517	224	46	483	52	218	0	69	23	0	11

Major/Minor	Major1			Major2			Minor1			Minor2		
Conflicting Flow All	536	0	0	741	0	0	1350	1371	629	1380	1457	510
Stage 1	-	-	-	-	-	-	743	743	-	602	602	-
Stage 2	-	-	-	-	-	-	607	628	-	778	855	-
Critical Hdwy	4.13	-	-	4.14	-	-	7.12	6.52	6.22	7.11	6.51	6.21
Critical Hdwy Stg 1	-	-	-	-	-	-	6.12	5.52	-	6.11	5.51	-
Critical Hdwy Stg 2	-	-	-	-	-	-	6.12	5.52	-	6.11	5.51	-
Follow-up Hdwy	2.227	-	-	2.236	-	-	3.518	4.018	3.318	3.509	4.009	3.309
Pot Cap-1 Maneuver	1027	-	-	857	-	-	~ 128	146	482	122	130	565
Stage 1	-	-	-	-	-	-	407	422	-	488	490	-
Stage 2	-	-	-	-	-	-	483	476	-	391	376	-
Platoon blocked, %		-	-		-	-						
Mov Cap-1 Maneuver	1026	-	-	857	-	-	~ 109	121	482	91	108	564
Mov Cap-2 Maneuver	-	-	-	-	-	-	~ 109	121	-	91	108	-
Stage 1	-	-	-	-	-	-	367	380	-	439	452	-
Stage 2	-	-	-	-	-	-	437	439	-	302	339	-

Approach	EB	WB	NB	SB
HCM Control Delay, s	0.6	0.7	$ 593.1	44
HCM LOS			F	E

Minor Lane/Major Mvmt	NBLn1	EBL	EBT	EBR	WBL	WBT	WBR	SBLn1
Capacity (veh/h)	134	1026	-	-	857	-	-	126
HCM Lane V/C Ratio	2.144	0.056	-	-	0.054	-	-	0.274
HCM Control Delay (s)	$ 593.1	8.7	0	-	9.4	0	-	44
HCM Lane LOS	F	A	A	-	A	A	-	E
HCM 95th %tile Q(veh)	23.7	0.2	-	-	0.2	-	-	1

Notes

~: Volume exceeds capacity $: Delay exceeds 300s +: Computation Not Defined *: All major volume in platoon

Intersection	
Int Delay, s/veh	0.2

Movement	EBL	EBT	WBT	WBR	SBL	SBR
Lane Configurations		↑	↑		⋔	
Traffic Vol, veh/h	0	530	495	0	5	10
Future Vol, veh/h	0	530	495	0	5	10
Conflicting Peds, #/hr	0	0	0	0	0	0
Sign Control	Free	Free	Free	Free	Stop	Stop
RT Channelized	-	None	-	None	-	None
Storage Length	-	-	-	-	0	-
Veh in Median Storage, #	-	0	0	-	0	-
Grade, %	-	0	0	-	0	-
Peak Hour Factor	92	92	92	92	92	92
Heavy Vehicles, %	2	2	4	4	2	2
Mvmt Flow	0	576	538	0	5	11

Major/Minor	Major1		Major2		Minor2	
Conflicting Flow All	-	0	-	0	1114	538
Stage 1	-	-	-	-	538	-
Stage 2	-	-	-	-	576	-
Critical Hdwy	-	-	-	-	6.42	6.22
Critical Hdwy Stg 1	-	-	-	-	5.42	-
Critical Hdwy Stg 2	-	-	-	-	5.42	-
Follow-up Hdwy	-	-	-	-	3.518	3.318
Pot Cap-1 Maneuver	0	-	-	0	230	543
Stage 1	0	-	-	0	585	-
Stage 2	0	-	-	0	562	-
Platoon blocked, %		-	-			
Mov Cap-1 Maneuver	-	-	-	-	230	543
Mov Cap-2 Maneuver	-	-	-	-	230	-
Stage 1	-	-	-	-	585	-
Stage 2	-	-	-	-	562	-

Approach	EB	WB	SB
HCM Control Delay, s	0	0	15.1
HCM LOS			C

Minor Lane/Major Mvmt	EBT	WBT	SBLn1
Capacity (veh/h)	-	-	374
HCM Lane V/C Ratio	-	-	0.044
HCM Control Delay (s)	-	-	15.1
HCM Lane LOS	-	-	C
HCM 95th %tile Q(veh)	-	-	0.1

Intersection	
Int Delay, s/veh	0

Movement	EBT	EBR	WBL	WBT	NBL	NBR
Lane Configurations	↑			↑	⋔	
Traffic Vol, veh/h	535	0	0	495	0	0
Future Vol, veh/h	535	0	0	495	0	0
Conflicting Peds, #/hr	0	0	0	0	0	0
Sign Control	Free	Free	Free	Free	Stop	Stop
RT Channelized	-	None	-	None	-	None
Storage Length	-	-	-	-	0	-
Veh in Median Storage, #	0	-	-	0	0	-
Grade, %	0	-	-	0	0	-
Peak Hour Factor	92	92	92	92	92	92
Heavy Vehicles, %	2	2	4	4	2	2
Mvmt Flow	582	0	0	538	0	0

Major/Minor	Major1		Major2		Minor1	
Conflicting Flow All	0	-	-	-	1120	582
Stage 1	-	-	-	-	582	-
Stage 2	-	-	-	-	538	-
Critical Hdwy	-	-	-	-	6.42	6.22
Critical Hdwy Stg 1	-	-	-	-	5.42	-
Critical Hdwy Stg 2	-	-	-	-	5.42	-
Follow-up Hdwy	-	-	-	-	3.518	3.318
Pot Cap-1 Maneuver	-	0	0	-	228	513
Stage 1	-	0	0	-	559	-
Stage 2	-	0	0	-	585	-
Platoon blocked, %	-			-		
Mov Cap-1 Maneuver	-	-	-	-	228	513
Mov Cap-2 Maneuver	-	-	-	-	228	-
Stage 1	-	-	-	-	559	-
Stage 2	-	-	-	-	585	-

Approach	EB	WB	NB
HCM Control Delay, s	0	0	0
HCM LOS			A

Minor Lane/Major Mvmt	NBLn1	EBT	WBT
Capacity (veh/h)	-	-	-
HCM Lane V/C Ratio	-	-	-
HCM Control Delay (s)	0	-	-
HCM Lane LOS	A	-	-
HCM 95th %tile Q(veh)	-	-	-

Intersection	
Int Delay, s/veh	123.4

Movement	EBL	EBT	EBR	WBL	WBT	WBR	NBL	NBT	NBR	SBL	SBT	SBR
Lane Configurations												
Traffic Vol, veh/h	60	315	160	85	335	85	105	45	65	60	40	55
Future Vol, veh/h	60	315	160	85	335	85	105	45	65	60	40	55
Conflicting Peds, #/hr	0	0	0	0	0	0	0	0	0	0	0	0
Sign Control	Free	Free	Free	Free	Free	Free	Stop	Stop	Stop	Stop	Stop	Stop
RT Channelized	-	-	None	-	-	None	-	-	None	-	-	None
Storage Length	175	-	-	150	-	125	-	-	-	100	-	-
Veh in Median Storage, #	-	0	-	-	0	-	-	0	-	-	0	-
Grade, %	-	0	-	-	0	-	-	0	-	-	0	-
Peak Hour Factor	82	82	82	82	82	82	82	82	82	82	82	82
Heavy Vehicles, %	2	2	2	2	2	2	1	1	1	1	1	1
Mvmt Flow	73	384	195	104	409	104	128	55	79	73	49	67

Major/Minor	Major1			Major2			Minor1			Minor2		
Conflicting Flow All	513	0	0	579	0	0	1355	1349	482	1312	1342	409
Stage 1	-	-	-	-	-	-	628	628	-	617	617	-
Stage 2	-	-	-	-	-	-	727	721	-	695	725	-
Critical Hdwy	4.12	-	-	4.12	-	-	7.11	6.51	6.21	7.11	6.51	6.21
Critical Hdwy Stg 1	-	-	-	-	-	-	6.11	5.51	-	6.11	5.51	-
Critical Hdwy Stg 2	-	-	-	-	-	-	6.11	5.51	-	6.11	5.51	-
Follow-up Hdwy	2.218	-	-	2.218	-	-	3.509	4.009	3.309	3.509	4.009	3.309
Pot Cap-1 Maneuver	1052	-	-	995	-	-	~ 127	151	586	136	153	645
Stage 1	-	-	-	-	-	-	472	477	-	479	483	-
Stage 2	-	-	-	-	-	-	417	433	-	434	431	-
Platoon blocked, %		-	-		-	-						
Mov Cap-1 Maneuver	1052	-	-	995	-	-	~ 70	126	586	~ 68	127	645
Mov Cap-2 Maneuver	-	-	-	-	-	-	~ 70	126	-	~ 68	127	-
Stage 1	-	-	-	-	-	-	439	444	-	446	432	-
Stage 2	-	-	-	-	-	-	297	388	-	306	401	-

Approach	EB	WB	NB	SB
HCM Control Delay, s	1	1.5	$ 722.7	112.2
HCM LOS			F	F

Minor Lane/Major Mvmt	NBLn1	EBL	EBT	EBR	WBL	WBT	WBR	SBLn1	SBLn2
Capacity (veh/h)	109	1052	-	-	995	-	-	68	237
HCM Lane V/C Ratio	2.405	0.07	-	-	0.104	-	-	1.076	0.489
HCM Control Delay (s)	$ 722.7	8.7	-	-	9	-	-	236.1	33.9
HCM Lane LOS	F	A	-	-	A	-	-	F	D
HCM 95th %tile Q(veh)	23.4	0.2	-	-	0.3	-	-	5.6	2.5

Notes

~: Volume exceeds capacity $: Delay exceeds 300s +: Computation Not Defined *: All major volume in platoon

HCM 6th Signalized Intersection Summary
1: Jackson Dr & WIS-60

05/19/2020

Movement	EBL	EBT	EBR	WBL	WBT	WBR	NBL	NBT	NBR	SBL	SBT	SBR
Lane Configurations												
Traffic Volume (veh/h)	65	525	85	60	510	80	95	45	60	75	35	80
Future Volume (veh/h)	65	525	85	60	510	80	95	45	60	75	35	80
Initial Q (Qb), veh	0	0	0	0	0	0	0	0	0	0	0	0
Ped-Bike Adj(A_pbT)	1.00		1.00	1.00		1.00	1.00		1.00	1.00		1.00
Parking Bus, Adj	1.00	1.00	1.00	1.00	1.00	1.00	1.00	1.00	1.00	1.00	1.00	1.00
Work Zone On Approach		No			No			No			No	
Adj Sat Flow, veh/h/ln	1870	1659	1659	1870	1870	1870	1885	1672	1672	1870	1659	1659
Adj Flow Rate, veh/h	66	536	87	61	520	82	97	46	61	77	36	82
Peak Hour Factor	0.98	0.98	0.98	0.98	0.98	0.98	0.98	0.98	0.98	0.98	0.98	0.98
Percent Heavy Veh, %	2	2	2	2	2	2	1	1	1	2	2	2
Cap, veh/h	494	901	146	105	649	98	244	117	155	256	81	184
Arrive On Green	0.08	0.65	0.65	0.47	0.47	0.47	0.18	0.18	0.18	0.18	0.18	0.18
Sat Flow, veh/h	1781	1392	226	101	1386	210	1284	652	864	1287	450	1025
Grp Volume(v), veh/h	66	0	623	663	0	0	97	0	107	77	0	118
Grp Sat Flow(s),veh/h/ln	1781	0	1617	1697	0	0	1284	0	1516	1287	0	1474
Q Serve(g_s), s	1.1	0.0	15.1	12.2	0.0	0.0	5.0	0.0	4.2	3.8	0.0	4.9
Cycle Q Clear(g_c), s	1.1	0.0	15.1	22.7	0.0	0.0	9.8	0.0	4.2	8.1	0.0	4.9
Prop In Lane	1.00		0.14	0.09		0.12	1.00		0.57	1.00		0.69
Lane Grp Cap(c), veh/h	494	0	1047	852	0	0	244	0	272	256	0	265
V/C Ratio(X)	0.13	0.00	0.60	0.78	0.00	0.00	0.40	0.00	0.39	0.30	0.00	0.45
Avail Cap(c_a), veh/h	999	0	1816	1166	0	0	674	0	779	686	0	757
HCM Platoon Ratio	1.00	1.00	1.00	1.00	1.00	1.00	1.00	1.00	1.00	1.00	1.00	1.00
Upstream Filter(I)	1.00	0.00	1.00	1.00	0.00	0.00	1.00	0.00	1.00	1.00	0.00	1.00
Uniform Delay (d), s/veh	6.2	0.0	6.9	15.4	0.0	0.0	29.3	0.0	24.7	28.2	0.0	24.9
Incr Delay (d2), s/veh	0.0	0.0	0.8	3.0	0.0	0.0	0.4	0.0	0.3	0.2	0.0	0.4
Initial Q Delay(d3),s/veh	0.0	0.0	0.0	0.0	0.0	0.0	0.0	0.0	0.0	0.0	0.0	0.0
%ile BackOfQ(95%),veh/ln	0.7	0.0	7.7	13.4	0.0	0.0	2.7	0.0	2.7	2.1	0.0	3.0
Unsig. Movement Delay, s/veh												
LnGrp Delay(d),s/veh	6.2	0.0	7.7	18.3	0.0	0.0	29.7	0.0	25.0	28.5	0.0	25.4
LnGrp LOS	A	A	A	B	A	A	C	A	C	C	A	C
Approach Vol, veh/h		689			663			204			195	
Approach Delay, s/veh		7.6			18.3			27.2			26.6	
Approach LOS		A			B			C			C	

Timer - Assigned Phs	1	2		4		6		8
Phs Duration (G+Y+Rc), s	12.2	37.2		18.7		49.4		18.7
Change Period (Y+Rc), s	6.5	* 5.3		6.5		* 5.3		6.5
Max Green Setting (Gmax), s	25.0	* 45		35.0		* 77		35.0
Max Q Clear Time (g_c+I1), s	3.1	24.7		11.8		17.1		10.1
Green Ext Time (p_c), s	0.0	7.2		0.4		8.5		0.4

Intersection Summary	
HCM 6th Ctrl Delay	16.1
HCM 6th LOS	B

Notes

* HCM 6th computational engine requires equal clearance times for the phases crossing the barrier.

Intersection	
Int Delay, s/veh	1.4

Movement	EBL	EBT	WBT	WBR	SBL	SBR
Lane Configurations						
Traffic Vol, veh/h	40	620	610	20	20	40
Future Vol, veh/h	40	620	610	20	20	40
Conflicting Peds, #/hr	0	0	0	0	0	0
Sign Control	Free	Free	Free	Free	Stop	Stop
RT Channelized	-	None	-	None	-	None
Storage Length	-	-	-	-	0	-
Veh in Median Storage, #	-	0	0	-	0	-
Grade, %	-	0	0	-	0	-
Peak Hour Factor	92	92	92	92	92	92
Heavy Vehicles, %	3	3	2	2	2	2
Mvmt Flow	43	674	663	22	22	43

Major/Minor	Major1		Major2		Minor2	
Conflicting Flow All	685	0	-	0	1434	674
Stage 1	-	-	-	-	674	-
Stage 2	-	-	-	-	760	-
Critical Hdwy	4.13	-	-	-	6.42	6.22
Critical Hdwy Stg 1	-	-	-	-	5.42	-
Critical Hdwy Stg 2	-	-	-	-	5.42	-
Follow-up Hdwy	2.227	-	-	-	3.518	3.318
Pot Cap-1 Maneuver	904	-	-	-	147	455
Stage 1	-	-	-	-	506	-
Stage 2	-	-	-	-	462	-
Platoon blocked, %		-	-	-		
Mov Cap-1 Maneuver	904	-	-	-	136	455
Mov Cap-2 Maneuver	-	-	-	-	136	-
Stage 1	-	-	-	-	468	-
Stage 2	-	-	-	-	462	-

Approach	EB	WB	SB
HCM Control Delay, s	0.6	0	23.9
HCM LOS			C

Minor Lane/Major Mvmt	EBL	EBT	WBT	WBR	SBLn1
Capacity (veh/h)	904	-	-	-	255
HCM Lane V/C Ratio	0.048	-	-	-	0.256
HCM Control Delay (s)	9.2	0	-	-	23.9
HCM Lane LOS	A	A	-	-	C
HCM 95th %tile Q(veh)	0.2	-	-	-	1

Intersection	
Int Delay, s/veh	46.7

Movement	EBL	EBT	EBR	WBL	WBT	WBR	NBL	NBT	NBR	SBL	SBT	SBR
Lane Configurations												
Traffic Vol, veh/h	20	395	225	55	410	20	185	0	45	20	0	35
Future Vol, veh/h	20	395	225	55	410	20	185	0	45	20	0	35
Conflicting Peds, #/hr	1	0	0	0	0	1	0	0	0	0	0	0
Sign Control	Free	Free	Free	Free	Free	Free	Stop	Stop	Stop	Stop	Stop	Stop
RT Channelized	-	-	None	-	-	None	-	-	None	-	-	None
Storage Length	-	-	-	-	-	-	-	-	-	-	-	-
Veh in Median Storage, #	-	0	-	-	0	-	-	0	-	-	0	-
Grade, %	-	0	-	-	0	-	-	0	-	-	0	-
Peak Hour Factor	94	94	94	94	94	94	94	94	94	94	94	94
Heavy Vehicles, %	3	3	3	3	3	3	2	2	2	2	2	2
Mvmt Flow	21	420	239	59	436	21	197	0	48	21	0	37

Major/Minor	Major1			Major2			Minor1			Minor2		
Conflicting Flow All	458	0	0	659	0	0	1165	1158	540	1172	1267	448
Stage 1	-	-	-	-	-	-	582	582	-	566	566	-
Stage 2	-	-	-	-	-	-	583	576	-	606	701	-
Critical Hdwy	4.13	-	-	4.13	-	-	7.12	6.52	6.22	7.12	6.52	6.22
Critical Hdwy Stg 1	-	-	-	-	-	-	6.12	5.52	-	6.12	5.52	-
Critical Hdwy Stg 2	-	-	-	-	-	-	6.12	5.52	-	6.12	5.52	-
Follow-up Hdwy	2.227	-	-	2.227	-	-	3.518	4.018	3.318	3.518	4.018	3.318
Pot Cap-1 Maneuver	1098	-	-	924	-	-	~ 171	196	542	169	169	611
Stage 1	-	-	-	-	-	-	499	499	-	509	507	-
Stage 2	-	-	-	-	-	-	498	502	-	484	441	-
Platoon blocked, %		-	-		-	-						
Mov Cap-1 Maneuver	1097	-	-	924	-	-	~ 146	173	542	140	149	610
Mov Cap-2 Maneuver	-	-	-	-	-	-	~ 146	173	-	140	149	-
Stage 1	-	-	-	-	-	-	483	483	-	492	463	-
Stage 2	-	-	-	-	-	-	427	458	-	427	427	-

Approach	EB	WB	NB	SB
HCM Control Delay, s	0.3	1	278.3	21.6
HCM LOS			F	C

Minor Lane/Major Mvmt	NBLn1	EBL	EBT	EBR	WBL	WBT	WBR	SBLn1
Capacity (veh/h)	170	1097	-	-	924	-	-	275
HCM Lane V/C Ratio	1.439	0.019	-	-	0.063	-	-	0.213
HCM Control Delay (s)	278.3	8.3	0	-	9.2	0	-	21.6
HCM Lane LOS	F	A	A	-	A	A	-	C
HCM 95th %tile Q(veh)	15.3	0.1	-	-	0.2	-	-	0.8

Notes

~: Volume exceeds capacity $: Delay exceeds 300s +: Computation Not Defined *: All major volume in platoon

Intersection	
Int Delay, s/veh	0

Movement	EBL	EBT	WBT	WBR	SBL	SBR
Lane Configurations		↑	↑		⋔	
Traffic Vol, veh/h	5	455	485	0	0	0
Future Vol, veh/h	5	455	485	0	0	0
Conflicting Peds, #/hr	0	0	0	0	0	0
Sign Control	Free	Free	Free	Free	Stop	Stop
RT Channelized	-	None	-	None	-	None
Storage Length	-	-	-	-	0	-
Veh in Median Storage, #	-	0	0	-	0	-
Grade, %	-	0	0	-	0	-
Peak Hour Factor	92	92	92	92	92	92
Heavy Vehicles, %	2	2	3	3	2	2
Mvmt Flow	5	495	527	0	0	0

Major/Minor	Major1		Major2		Minor2	
Conflicting Flow All	527	0	-	0	1032	527
Stage 1	-	-	-	-	527	-
Stage 2	-	-	-	-	505	-
Critical Hdwy	4.12	-	-	-	6.42	6.22
Critical Hdwy Stg 1	-	-	-	-	5.42	-
Critical Hdwy Stg 2	-	-	-	-	5.42	-
Follow-up Hdwy	2.218	-	-	-	3.518	3.318
Pot Cap-1 Maneuver	1040	-	-	0	258	551
Stage 1	-	-	-	0	592	-
Stage 2	-	-	-	0	606	-
Platoon blocked, %		-	-			
Mov Cap-1 Maneuver	1040	-	-	-	256	551
Mov Cap-2 Maneuver	-	-	-	-	256	-
Stage 1	-	-	-	-	588	-
Stage 2	-	-	-	-	606	-

Approach	EB	WB	SB
HCM Control Delay, s	0.1	0	0
HCM LOS			A

Minor Lane/Major Mvmt	EBL	EBT	WBT	SBLn1
Capacity (veh/h)	1040	-	-	-
HCM Lane V/C Ratio	0.005	-	-	-
HCM Control Delay (s)	8.5	-	-	0
HCM Lane LOS	A	-	-	A
HCM 95th %tile Q(veh)	0	-	-	-

Intersection	
Int Delay, s/veh	0

Movement	EBT	EBR	WBL	WBT	NBL	NBR
Lane Configurations	↑			↑	⋔	
Traffic Vol, veh/h	455	0	0	485	0	0
Future Vol, veh/h	455	0	0	485	0	0
Conflicting Peds, #/hr	0	0	0	0	0	0
Sign Control	Free	Free	Free	Free	Stop	Stop
RT Channelized	-	None	-	None	-	None
Storage Length	-	-	-	-	0	-
Veh in Median Storage, #	0	-	-	0	0	-
Grade, %	0	-	-	0	0	-
Peak Hour Factor	92	92	92	92	92	92
Heavy Vehicles, %	2	2	3	3	2	2
Mvmt Flow	495	0	0	527	0	0

Major/Minor	Major1		Major2		Minor1	
Conflicting Flow All	0	-	-	-	1022	495
Stage 1	-	-	-	-	495	-
Stage 2	-	-	-	-	527	-
Critical Hdwy	-	-	-	-	6.42	6.22
Critical Hdwy Stg 1	-	-	-	-	5.42	-
Critical Hdwy Stg 2	-	-	-	-	5.42	-
Follow-up Hdwy	-	-	-	-	3.518	3.318
Pot Cap-1 Maneuver	-	0	0	-	261	575
Stage 1	-	0	0	-	613	-
Stage 2	-	0	0	-	592	-
Platoon blocked, %	-			-		
Mov Cap-1 Maneuver	-	-	-	-	261	575
Mov Cap-2 Maneuver	-	-	-	-	261	-
Stage 1	-	-	-	-	613	-
Stage 2	-	-	-	-	592	-

Approach	EB	WB	NB
HCM Control Delay, s	0	0	0
HCM LOS			A

Minor Lane/Major Mvmt	NBLn1	EBT	WBT
Capacity (veh/h)	-	-	-
HCM Lane V/C Ratio	-	-	-
HCM Control Delay (s)	0	-	-
HCM Lane LOS	A	-	-
HCM 95th %tile Q(veh)	-	-	-

Intersection	
Int Delay, s/veh	29.6

Movement	EBL	EBT	EBR	WBL	WBT	WBR	NBL	NBT	NBR	SBL	SBT	SBR
Lane Configurations												
Traffic Vol, veh/h	55	265	135	75	295	40	110	35	60	60	35	80
Future Vol, veh/h	55	265	135	75	295	40	110	35	60	60	35	80
Conflicting Peds, #/hr	0	0	0	0	0	0	0	0	0	0	0	0
Sign Control	Free	Free	Free	Free	Free	Free	Stop	Stop	Stop	Stop	Stop	Stop
RT Channelized	-	-	None	-	-	None	-	-	None	-	-	None
Storage Length	175	-	-	150	-	125	-	-	-	100	-	-
Veh in Median Storage, #	-	0	-	-	0	-	-	0	-	-	0	-
Grade, %	-	0	-	-	0	-	-	0	-	-	0	-
Peak Hour Factor	92	92	92	92	92	92	92	92	92	92	92	92
Heavy Vehicles, %	2	2	2	3	3	3	2	2	2	1	1	1
Mvmt Flow	60	288	147	82	321	43	120	38	65	65	38	87

Major/Minor	Major1			Major2			Minor1			Minor2		
Conflicting Flow All	364	0	0	435	0	0	1051	1010	362	1018	1040	321
Stage 1	-	-	-	-	-	-	482	482	-	485	485	-
Stage 2	-	-	-	-	-	-	569	528	-	533	555	-
Critical Hdwy	4.12	-	-	4.13	-	-	7.12	6.52	6.22	7.11	6.51	6.21
Critical Hdwy Stg 1	-	-	-	-	-	-	6.12	5.52	-	6.11	5.51	-
Critical Hdwy Stg 2	-	-	-	-	-	-	6.12	5.52	-	6.11	5.51	-
Follow-up Hdwy	2.218	-	-	2.227	-	-	3.518	4.018	3.318	3.509	4.009	3.309
Pot Cap-1 Maneuver	1195	-	-	1119	-	-	205	240	683	217	231	722
Stage 1	-	-	-	-	-	-	565	553	-	565	553	-
Stage 2	-	-	-	-	-	-	507	528	-	532	515	-
Platoon blocked, %		-	-		-	-						
Mov Cap-1 Maneuver	1195	-	-	1119	-	-	141	211	683	154	204	722
Mov Cap-2 Maneuver	-	-	-	-	-	-	141	211	-	154	204	-
Stage 1	-	-	-	-	-	-	537	525	-	537	513	-
Stage 2	-	-	-	-	-	-	383	489	-	424	489	-

Approach	EB	WB	NB	SB
HCM Control Delay, s	1	1.5	151.4	26.9
HCM LOS			F	D

Minor Lane/Major Mvmt	NBLn1	EBL	EBT	EBR	WBL	WBT	WBR	SBLn1	SBLn2
Capacity (veh/h)	198	1195	-	-	1119	-	-	154	407
HCM Lane V/C Ratio	1.125	0.05	-	-	0.073	-	-	0.423	0.307
HCM Control Delay (s)	151.4	8.2	-	-	8.5	-	-	44.5	17.7
HCM Lane LOS	F	A	-	-	A	-	-	E	C
HCM 95th %tile Q(veh)	10.8	0.2	-	-	0.2	-	-	1.9	1.3

HCM 6th Signalized Intersection Summary
1: Jackson Dr & WIS-60

05/19/2020

Movement	EBL	EBT	EBR	WBL	WBT	WBR	NBL	NBT	NBR	SBL	SBT	SBR
Lane Configurations												
Traffic Volume (veh/h)	70	480	30	40	455	45	115	55	60	85	25	185
Future Volume (veh/h)	70	480	30	40	455	45	115	55	60	85	25	185
Initial Q (Qb), veh	0	0	0	0	0	0	0	0	0	0	0	0
Ped-Bike Adj(A_pbT)	1.00		1.00	1.00		1.00	1.00		0.97	1.00		0.99
Parking Bus, Adj	1.00	1.00	1.00	1.00	1.00	1.00	1.00	1.00	1.00	1.00	1.00	1.00
Work Zone On Approach		No			No			No			No	
Adj Sat Flow, veh/h/ln	1752	1554	1554	1767	1767	1767	1826	1619	1619	1856	1646	1646
Adj Flow Rate, veh/h	73	500	31	42	474	47	120	57	62	89	26	193
Peak Hour Factor	0.96	0.96	0.96	0.96	0.96	0.96	0.96	0.96	0.96	0.96	0.96	0.96
Percent Heavy Veh, %	10	10	10	9	9	9	5	5	5	3	3	3
Cap, veh/h	420	828	51	81	584	56	252	190	207	356	46	340
Arrive On Green	0.08	0.57	0.57	0.40	0.40	0.40	0.27	0.27	0.27	0.27	0.27	0.27
Sat Flow, veh/h	1668	1447	90	74	1445	138	1131	698	759	1258	168	1245
Grp Volume(v), veh/h	73	0	531	563	0	0	120	0	119	89	0	219
Grp Sat Flow(s),veh/h/ln	1668	0	1537	1657	0	0	1131	0	1457	1258	0	1413
Q Serve(g_s), s	1.7	0.0	17.2	11.1	0.0	0.0	7.8	0.0	4.9	4.6	0.0	10.1
Cycle Q Clear(g_c), s	1.7	0.0	17.2	23.0	0.0	0.0	17.9	0.0	4.9	9.5	0.0	10.1
Prop In Lane	1.00		0.06	0.07		0.08	1.00		0.52	1.00		0.88
Lane Grp Cap(c), veh/h	420	0	879	720	0	0	252	0	397	356	0	385
V/C Ratio(X)	0.17	0.00	0.60	0.78	0.00	0.00	0.48	0.00	0.30	0.25	0.00	0.57
Avail Cap(c_a), veh/h	830	0	1546	1021	0	0	464	0	670	592	0	650
HCM Platoon Ratio	1.00	1.00	1.00	1.00	1.00	1.00	1.00	1.00	1.00	1.00	1.00	1.00
Upstream Filter(I)	1.00	0.00	1.00	1.00	0.00	0.00	1.00	0.00	1.00	1.00	0.00	1.00
Uniform Delay (d), s/veh	9.4	0.0	10.6	20.1	0.0	0.0	31.5	0.0	21.9	25.7	0.0	23.8
Incr Delay (d2), s/veh	0.1	0.0	1.0	3.4	0.0	0.0	0.5	0.0	0.2	0.1	0.0	0.5
Initial Q Delay(d3),s/veh	0.0	0.0	0.0	0.0	0.0	0.0	0.0	0.0	0.0	0.0	0.0	0.0
%ile BackOfQ(95%),veh/ln	1.1	0.0	9.2	14.0	0.0	0.0	3.8	0.0	3.0	2.4	0.0	6.0
Unsig. Movement Delay, s/veh												
LnGrp Delay(d),s/veh	9.5	0.0	11.6	23.5	0.0	0.0	32.0	0.0	22.1	25.8	0.0	24.3
LnGrp LOS	A	A	B	C	A	A	C	A	C	C	A	C
Approach Vol, veh/h		604			563			239			308	
Approach Delay, s/veh		11.4			23.5			27.1			24.7	
Approach LOS		B			C			C			C	

Timer - Assigned Phs	1	2		4		6		8
Phs Duration (G+Y+Rc), s	12.8	36.0		27.2		48.8		27.2
Change Period (Y+Rc), s	6.5	* 5.3		6.5		* 5.3		6.5
Max Green Setting (Gmax), s	25.0	* 45		35.0		* 77		35.0
Max Q Clear Time (g_c+I1), s	3.7	25.0		19.9		19.2		12.1
Green Ext Time (p_c), s	0.0	5.8		0.5		6.7		0.8

Intersection Summary	
HCM 6th Ctrl Delay	19.9
HCM 6th LOS	B

Notes

* HCM 6th computational engine requires equal clearance times for the phases crossing the barrier.

Intersection	
Int Delay, s/veh	2.8

Movement	EBL	EBT	WBT	WBR	SBL	SBR
Lane Configurations						
Traffic Vol, veh/h	80	545	475	35	40	65
Future Vol, veh/h	80	545	475	35	40	65
Conflicting Peds, #/hr	0	0	0	0	0	0
Sign Control	Free	Free	Free	Free	Stop	Stop
RT Channelized	-	None	-	None	-	None
Storage Length	-	-	-	-	0	-
Veh in Median Storage, #	-	0	0	-	0	-
Grade, %	-	0	0	-	0	-
Peak Hour Factor	92	92	92	92	92	92
Heavy Vehicles, %	4	4	9	9	2	2
Mvmt Flow	87	592	516	38	43	71

Major/Minor	Major1		Major2		Minor2	
Conflicting Flow All	554	0	-	0	1301	535
Stage 1	-	-	-	-	535	-
Stage 2	-	-	-	-	766	-
Critical Hdwy	4.14	-	-	-	6.42	6.22
Critical Hdwy Stg 1	-	-	-	-	5.42	-
Critical Hdwy Stg 2	-	-	-	-	5.42	-
Follow-up Hdwy	2.236	-	-	-	3.518	3.318
Pot Cap-1 Maneuver	1006	-	-	-	178	545
Stage 1	-	-	-	-	587	-
Stage 2	-	-	-	-	459	-
Platoon blocked, %		-	-	-		
Mov Cap-1 Maneuver	1006	-	-	-	155	545
Mov Cap-2 Maneuver	-	-	-	-	155	-
Stage 1	-	-	-	-	511	-
Stage 2	-	-	-	-	459	-

Approach	EB	WB	SB
HCM Control Delay, s	1.1	0	26.7
HCM LOS			D

Minor Lane/Major Mvmt	EBL	EBT	WBT	WBR	SBLn1
Capacity (veh/h)	1006	-	-	-	278
HCM Lane V/C Ratio	0.086	-	-	-	0.411
HCM Control Delay (s)	8.9	0	-	-	26.7
HCM Lane LOS	A	A	-	-	D
HCM 95th %tile Q(veh)	0.3	-	-	-	1.9

Intersection	
Int Delay, s/veh	19.9

Movement	EBL	EBT	EBR	WBL	WBT	WBR	NBL	NBT	NBR	SBL	SBT	SBR
Lane Configurations												
Traffic Vol, veh/h	10	435	140	40	340	15	110	0	30	75	0	60
Future Vol, veh/h	10	435	140	40	340	15	110	0	30	75	0	60
Conflicting Peds, #/hr	0	0	0	0	0	0	0	0	0	0	0	0
Sign Control	Free	Free	Free	Free	Free	Free	Stop	Stop	Stop	Stop	Stop	Stop
RT Channelized	-	-	None	-	-	None	-	-	None	-	-	None
Storage Length	-	-	-	-	-	-	-	-	-	-	-	-
Veh in Median Storage, #	-	0	-	-	0	-	-	0	-	-	0	-
Grade, %	-	0	-	-	0	-	-	0	-	-	0	-
Peak Hour Factor	84	84	84	84	84	84	84	84	84	84	84	84
Heavy Vehicles, %	4	4	4	6	6	6	2	2	2	1	1	1
Mvmt Flow	12	518	167	48	405	18	131	0	36	89	0	71

Major/Minor	Major1			Major2			Minor1			Minor2		
Conflicting Flow All	423	0	0	685	0	0	1172	1145	602	1154	1219	414
Stage 1	-	-	-	-	-	-	626	626	-	510	510	-
Stage 2	-	-	-	-	-	-	546	519	-	644	709	-
Critical Hdwy	4.14	-	-	4.16	-	-	7.12	6.52	6.22	7.11	6.51	6.21
Critical Hdwy Stg 1	-	-	-	-	-	-	6.12	5.52	-	6.11	5.51	-
Critical Hdwy Stg 2	-	-	-	-	-	-	6.12	5.52	-	6.11	5.51	-
Follow-up Hdwy	2.236	-	-	2.254	-	-	3.518	4.018	3.318	3.509	4.009	3.309
Pot Cap-1 Maneuver	1126	-	-	890	-	-	169	200	500	175	181	640
Stage 1	-	-	-	-	-	-	472	477	-	548	539	-
Stage 2	-	-	-	-	-	-	522	533	-	463	439	-
Platoon blocked, %		-	-		-	-						
Mov Cap-1 Maneuver	1126	-	-	890	-	-	140	182	500	152	165	640
Mov Cap-2 Maneuver	-	-	-	-	-	-	140	182	-	152	165	-
Stage 1	-	-	-	-	-	-	464	468	-	538	501	-
Stage 2	-	-	-	-	-	-	431	495	-	422	431	-

Approach	EB	WB	NB	SB
HCM Control Delay, s	0.1	0.9	126.6	50.4
HCM LOS			F	F

Minor Lane/Major Mvmt	NBLn1	EBL	EBT	EBR	WBL	WBT	WBR	SBLn1
Capacity (veh/h)	166	1126	-	-	890	-	-	230
HCM Lane V/C Ratio	1.004	0.011	-	-	0.054	-	-	0.699
HCM Control Delay (s)	126.6	8.2	0	-	9.3	0	-	50.4
HCM Lane LOS	F	A	A	-	A	A	-	F
HCM 95th %tile Q(veh)	7.9	0	-	-	0.2	-	-	4.6

Intersection	
Int Delay, s/veh	0.3

Movement	EBL	EBT	WBT	WBR	SBL	SBR
Lane Configurations		↑	↑		⋔	
Traffic Vol, veh/h	25	515	385	5	0	10
Future Vol, veh/h	25	515	385	5	0	10
Conflicting Peds, #/hr	0	0	0	0	0	0
Sign Control	Free	Free	Free	Free	Stop	Stop
RT Channelized	-	None	-	None	-	None
Storage Length	-	-	-	-	0	-
Veh in Median Storage, #	-	0	0	-	0	-
Grade, %	-	0	0	-	0	-
Peak Hour Factor	92	92	92	92	92	92
Heavy Vehicles, %	6	6	6	6	2	2
Mvmt Flow	27	560	418	5	0	11

Major/Minor	Major1		Major2		Minor2	
Conflicting Flow All	423	0	-	0	1035	421
Stage 1	-	-	-	-	421	-
Stage 2	-	-	-	-	614	-
Critical Hdwy	4.16	-	-	-	6.42	6.22
Critical Hdwy Stg 1	-	-	-	-	5.42	-
Critical Hdwy Stg 2	-	-	-	-	5.42	-
Follow-up Hdwy	2.254	-	-	-	3.518	3.318
Pot Cap-1 Maneuver	1115	-	-	-	257	632
Stage 1	-	-	-	-	662	-
Stage 2	-	-	-	-	540	-
Platoon blocked, %		-	-	-		
Mov Cap-1 Maneuver	1115	-	-	-	248	632
Mov Cap-2 Maneuver	-	-	-	-	248	-
Stage 1	-	-	-	-	639	-
Stage 2	-	-	-	-	540	-

Approach	EB	WB	SB
HCM Control Delay, s	0.4	0	10.8
HCM LOS			B

Minor Lane/Major Mvmt	EBL	EBT	WBT	WBR	SBLn1
Capacity (veh/h)	1115	-	-	-	632
HCM Lane V/C Ratio	0.024	-	-	-	0.017
HCM Control Delay (s)	8.3	-	-	-	10.8
HCM Lane LOS	A	-	-	-	B
HCM 95th %tile Q(veh)	0.1	-	-	-	0.1

Intersection	
Int Delay, s/veh	0.3

Movement	EBT	EBR	WBL	WBT	NBL	NBR
Lane Configurations	↑			↑	⋔	
Traffic Vol, veh/h	500	15	5	385	5	10
Future Vol, veh/h	500	15	5	385	5	10
Conflicting Peds, #/hr	0	0	0	0	0	0
Sign Control	Free	Free	Free	Free	Stop	Stop
RT Channelized	-	None	-	None	-	None
Storage Length	-	-	-	-	0	-
Veh in Median Storage, #	0	-	-	0	0	-
Grade, %	0	-	-	0	0	-
Peak Hour Factor	92	92	92	92	92	92
Heavy Vehicles, %	6	6	6	6	2	2
Mvmt Flow	543	16	5	418	5	11

Major/Minor	Major1		Major2		Minor1	
Conflicting Flow All	0	0	559	0	979	551
Stage 1	-	-	-	-	551	-
Stage 2	-	-	-	-	428	-
Critical Hdwy	-	-	4.16	-	6.42	6.22
Critical Hdwy Stg 1	-	-	-	-	5.42	-
Critical Hdwy Stg 2	-	-	-	-	5.42	-
Follow-up Hdwy	-	-	2.254	-	3.518	3.318
Pot Cap-1 Maneuver	-	-	992	-	277	534
Stage 1	-	-	-	-	577	-
Stage 2	-	-	-	-	657	-
Platoon blocked, %	-	-		-		
Mov Cap-1 Maneuver	-	-	992	-	275	534
Mov Cap-2 Maneuver	-	-	-	-	275	-
Stage 1	-	-	-	-	577	-
Stage 2	-	-	-	-	652	-

Approach	EB	WB	NB
HCM Control Delay, s	0	0.1	14.2
HCM LOS			B

Minor Lane/Major Mvmt	NBLn1	EBT	EBR	WBL	WBT
Capacity (veh/h)	406	-	-	992	-
HCM Lane V/C Ratio	0.04	-	-	0.005	-
HCM Control Delay (s)	14.2	-	-	8.6	-
HCM Lane LOS	B	-	-	A	-
HCM 95th %tile Q(veh)	0.1	-	-	0	-

Intersection	
Int Delay, s/veh	10.1

Movement	EBL	EBT	EBR	WBL	WBT	WBR	NBL	NBT	NBR	SBL	SBT	SBR
Lane Configurations												
Traffic Vol, veh/h	75	395	40	30	285	90	30	25	40	80	15	75
Future Vol, veh/h	75	395	40	30	285	90	30	25	40	80	15	75
Conflicting Peds, #/hr	0	0	1	1	0	0	0	0	0	0	0	0
Sign Control	Free	Free	Free	Free	Free	Free	Stop	Stop	Stop	Stop	Stop	Stop
RT Channelized	-	-	None	-	-	None	-	-	None	-	-	None
Storage Length	175	-	-	150	-	125	0	-	-	100	-	-
Veh in Median Storage, #	-	0	-	-	0	-	-	0	-	-	0	-
Grade, %	-	0	-	-	0	-	-	0	-	-	0	-
Peak Hour Factor	84	84	84	84	84	84	84	84	84	84	84	84
Heavy Vehicles, %	6	6	6	4	4	4	7	7	7	6	6	6
Mvmt Flow	89	470	48	36	339	107	36	30	48	95	18	89

Major/Minor	Major1			Major2			Minor1			Minor2		
Conflicting Flow All	446	0	0	519	0	0	1191	1191	495	1122	1108	339
Stage 1	-	-	-	-	-	-	673	673	-	411	411	-
Stage 2	-	-	-	-	-	-	518	518	-	711	697	-
Critical Hdwy	4.16	-	-	4.14	-	-	7.17	6.57	6.27	7.16	6.56	6.26
Critical Hdwy Stg 1	-	-	-	-	-	-	6.17	5.57	-	6.16	5.56	-
Critical Hdwy Stg 2	-	-	-	-	-	-	6.17	5.57	-	6.16	5.56	-
Follow-up Hdwy	2.254	-	-	2.236	-	-	3.563	4.063	3.363	3.554	4.054	3.354
Pot Cap-1 Maneuver	1093	-	-	1037	-	-	160	183	565	180	206	694
Stage 1	-	-	-	-	-	-	437	446	-	610	588	-
Stage 2	-	-	-	-	-	-	531	525	-	418	437	-
Platoon blocked, %		-	-		-	-						
Mov Cap-1 Maneuver	1093	-	-	1036	-	-	118	162	564	130	183	694
Mov Cap-2 Maneuver	-	-	-	-	-	-	118	162	-	130	183	-
Stage 1	-	-	-	-	-	-	401	409	-	561	567	-
Stage 2	-	-	-	-	-	-	433	507	-	326	401	-

Approach	EB	WB	NB	SB
HCM Control Delay, s	1.3	0.6	30.3	48
HCM LOS			D	E

Minor Lane/Major Mvmt	NBLn1	NBLn2	EBL	EBT	EBR	WBL	WBT	WBR	SBLn1	SBLn2
Capacity (veh/h)	118	289	1093	-	-	1036	-	-	130	474
HCM Lane V/C Ratio	0.303	0.268	0.082	-	-	0.034	-	-	0.733	0.226
HCM Control Delay (s)	48.2	22	8.6	-	-	8.6	-	-	85.4	14.8
HCM Lane LOS	E	C	A	-	-	A	-	-	F	B
HCM 95th %tile Q(veh)	1.2	1.1	0.3	-	-	0.1	-	-	4.2	0.9

HCM 6th Signalized Intersection Summary
1: Jackson Dr & WIS-60

05/19/2020

Movement	EBL	EBT	EBR	WBL	WBT	WBR	NBL	NBT	NBR	SBL	SBT	SBR
Lane Configurations												
Traffic Volume (veh/h)	180	565	125	50	490	100	75	80	55	85	65	105
Future Volume (veh/h)	180	565	125	50	490	100	75	80	55	85	65	105
Initial Q (Qb), veh	0	0	0	0	0	0	0	0	0	0	0	0
Ped-Bike Adj(A_pbT)	1.00		0.98	1.00		0.98	0.99		0.99	0.99		0.97
Parking Bus, Adj	1.00	1.00	1.00	1.00	1.00	1.00	1.00	1.00	1.00	1.00	1.00	1.00
Work Zone On Approach		No			No			No			No	
Adj Sat Flow, veh/h/ln	1856	1646	1646	1841	1841	1841	1856	1646	1646	1885	1672	1672
Adj Flow Rate, veh/h	194	608	134	54	527	108	81	86	59	91	70	113
Peak Hour Factor	0.93	0.93	0.93	0.93	0.93	0.93	0.93	0.93	0.93	0.93	0.93	0.93
Percent Heavy Veh, %	3	3	3	4	4	4	3	3	3	1	1	1
Cap, veh/h	438	833	184	86	610	121	212	196	135	254	122	197
Arrive On Green	0.10	0.64	0.64	0.47	0.47	0.47	0.22	0.22	0.22	0.22	0.22	0.22
Sat Flow, veh/h	1767	1300	287	84	1308	259	1185	906	621	1245	564	910
Grp Volume(v), veh/h	194	0	742	689	0	0	81	0	145	91	0	183
Grp Sat Flow(s),veh/h/ln	1767	0	1587	1651	0	0	1185	0	1527	1245	0	1474
Q Serve(g_s), s	4.2	0.0	26.1	18.7	0.0	0.0	5.4	0.0	6.8	5.6	0.0	9.2
Cycle Q Clear(g_c), s	4.2	0.0	26.1	31.1	0.0	0.0	14.6	0.0	6.8	12.4	0.0	9.2
Prop In Lane	1.00		0.18	0.08		0.16	1.00		0.41	1.00		0.62
Lane Grp Cap(c), veh/h	438	0	1017	818	0	0	212	0	331	254	0	319
V/C Ratio(X)	0.44	0.00	0.73	0.84	0.00	0.00	0.38	0.00	0.44	0.36	0.00	0.57
Avail Cap(c_a), veh/h	803	0	1467	940	0	0	457	0	646	511	0	624
HCM Platoon Ratio	1.00	1.00	1.00	1.00	1.00	1.00	1.00	1.00	1.00	1.00	1.00	1.00
Upstream Filter(I)	1.00	0.00	1.00	1.00	0.00	0.00	1.00	0.00	1.00	1.00	0.00	1.00
Uniform Delay (d), s/veh	7.9	0.0	10.0	19.7	0.0	0.0	35.5	0.0	28.1	33.4	0.0	29.0
Incr Delay (d2), s/veh	0.3	0.0	1.5	6.8	0.0	0.0	0.4	0.0	0.3	0.3	0.0	0.6
Initial Q Delay(d3),s/veh	0.0	0.0	0.0	0.0	0.0	0.0	0.0	0.0	0.0	0.0	0.0	0.0
%ile BackOfQ(95%),veh/ln	2.7	0.0	13.0	18.6	0.0	0.0	2.8	0.0	4.5	3.1	0.0	5.9
Unsig. Movement Delay, s/veh												
LnGrp Delay(d),s/veh	8.2	0.0	11.6	26.5	0.0	0.0	35.9	0.0	28.4	33.8	0.0	29.6
LnGrp LOS	A	A	B	C	A	A	D	A	C	C	A	C
Approach Vol, veh/h		936			689			226			274	
Approach Delay, s/veh		10.9			26.5			31.1			31.0	
Approach LOS		B			C			C			C	

Timer - Assigned Phs	1	2		4		6		8
Phs Duration (G+Y+Rc), s	14.4	43.9		24.4		58.3		24.4
Change Period (Y+Rc), s	6.5	* 5.3		6.5		* 5.3		6.5
Max Green Setting (Gmax), s	25.0	* 45		35.0		* 77		35.0
Max Q Clear Time (g_c+I1), s	6.2	33.1		16.6		28.1		14.4
Green Ext Time (p_c), s	0.2	5.5		0.5		11.1		0.7

Intersection Summary	
HCM 6th Ctrl Delay	20.7
HCM 6th LOS	C

Notes

* HCM 6th computational engine requires equal clearance times for the phases crossing the barrier.

Intersection	
Int Delay, s/veh	1.4

Movement	EBL	EBT	WBT	WBR	SBL	SBR
Lane Configurations						
Traffic Vol, veh/h	35	670	610	10	25	30
Future Vol, veh/h	35	670	610	10	25	30
Conflicting Peds, #/hr	0	0	0	0	0	0
Sign Control	Free	Free	Free	Free	Stop	Stop
RT Channelized	-	None	-	None	-	None
Storage Length	-	-	-	-	0	-
Veh in Median Storage, #	-	0	0	-	0	-
Grade, %	-	0	0	-	0	-
Peak Hour Factor	92	92	92	92	92	92
Heavy Vehicles, %	3	3	4	4	2	2
Mvmt Flow	38	728	663	11	27	33

Major/Minor	Major1		Major2		Minor2	
Conflicting Flow All	674	0	-	0	1473	669
Stage 1	-	-	-	-	669	-
Stage 2	-	-	-	-	804	-
Critical Hdwy	4.13	-	-	-	6.42	6.22
Critical Hdwy Stg 1	-	-	-	-	5.42	-
Critical Hdwy Stg 2	-	-	-	-	5.42	-
Follow-up Hdwy	2.227	-	-	-	3.518	3.318
Pot Cap-1 Maneuver	912	-	-	-	140	458
Stage 1	-	-	-	-	509	-
Stage 2	-	-	-	-	440	-
Platoon blocked, %		-	-	-		
Mov Cap-1 Maneuver	912	-	-	-	130	458
Mov Cap-2 Maneuver	-	-	-	-	130	-
Stage 1	-	-	-	-	473	-
Stage 2	-	-	-	-	440	-

Approach	EB	WB	SB
HCM Control Delay, s	0.5	0	28.4
HCM LOS			D

Minor Lane/Major Mvmt	EBL	EBT	WBT	WBR	SBLn1
Capacity (veh/h)	912	-	-	-	213
HCM Lane V/C Ratio	0.042	-	-	-	0.281
HCM Control Delay (s)	9.1	0	-	-	28.4
HCM Lane LOS	A	A	-	-	D
HCM 95th %tile Q(veh)	0.1	-	-	-	1.1

Intersection	
Int Delay, s/veh	99

Movement	EBL	EBT	EBR	WBL	WBT	WBR	NBL	NBT	NBR	SBL	SBT	SBR
Lane Configurations												
Traffic Vol, veh/h	50	455	190	40	425	45	185	0	60	20	0	10
Future Vol, veh/h	50	455	190	40	425	45	185	0	60	20	0	10
Conflicting Peds, #/hr	1	0	0	0	0	1	0	0	0	0	0	0
Sign Control	Free	Free	Free	Free	Free	Free	Stop	Stop	Stop	Stop	Stop	Stop
RT Channelized	-	-	None	-	-	None	-	-	None	-	-	None
Storage Length	-	-	-	-	-	-	-	-	-	-	-	-
Veh in Median Storage, #	-	0	-	-	0	-	-	0	-	-	0	-
Grade, %	-	0	-	-	0	-	-	0	-	-	0	-
Peak Hour Factor	87	87	87	87	87	87	87	87	87	87	87	87
Heavy Vehicles, %	3	3	3	4	4	4	2	2	2	1	1	1
Mvmt Flow	57	523	218	46	489	52	213	0	69	23	0	11

Major/Minor	Major1			Major2			Minor1			Minor2		
Conflicting Flow All	542	0	0	741	0	0	1359	1380	632	1389	1463	516
Stage 1	-	-	-	-	-	-	746	746	-	608	608	-
Stage 2	-	-	-	-	-	-	613	634	-	781	855	-
Critical Hdwy	4.13	-	-	4.14	-	-	7.12	6.52	6.22	7.11	6.51	6.21
Critical Hdwy Stg 1	-	-	-	-	-	-	6.12	5.52	-	6.11	5.51	-
Critical Hdwy Stg 2	-	-	-	-	-	-	6.12	5.52	-	6.11	5.51	-
Follow-up Hdwy	2.227	-	-	2.236	-	-	3.518	4.018	3.318	3.509	4.009	3.309
Pot Cap-1 Maneuver	1022	-	-	857	-	-	~ 126	144	480	121	129	561
Stage 1	-	-	-	-	-	-	405	421	-	485	487	-
Stage 2	-	-	-	-	-	-	480	473	-	389	376	-
Platoon blocked, %		-	-		-	-						
Mov Cap-1 Maneuver	1021	-	-	857	-	-	~ 107	120	480	90	107	560
Mov Cap-2 Maneuver	-	-	-	-	-	-	~ 107	120	-	90	107	-
Stage 1	-	-	-	-	-	-	365	379	-	437	449	-
Stage 2	-	-	-	-	-	-	434	436	-	300	339	-

Approach	EB	WB	NB	SB
HCM Control Delay, s	0.6	0.7	$ 589.3	44.4
HCM LOS			F	E

Minor Lane/Major Mvmt	NBLn1	EBL	EBT	EBR	WBL	WBT	WBR	SBLn1
Capacity (veh/h)	132	1021	-	-	857	-	-	125
HCM Lane V/C Ratio	2.133	0.056	-	-	0.054	-	-	0.276
HCM Control Delay (s)	$ 589.3	8.7	0	-	9.4	0	-	44.4
HCM Lane LOS	F	A	A	-	A	A	-	E
HCM 95th %tile Q(veh)	23.2	0.2	-	-	0.2	-	-	1

Notes

~: Volume exceeds capacity $: Delay exceeds 300s +: Computation Not Defined *: All major volume in platoon

Intersection	
Int Delay, s/veh	0.2

Movement	EBL	EBT	WBT	WBR	SBL	SBR
Lane Configurations		↑	↑		⋔	
Traffic Vol, veh/h	0	535	500	0	5	10
Future Vol, veh/h	0	535	500	0	5	10
Conflicting Peds, #/hr	0	0	0	0	0	0
Sign Control	Free	Free	Free	Free	Stop	Stop
RT Channelized	-	None	-	None	-	None
Storage Length	-	-	-	-	0	-
Veh in Median Storage, #	-	0	0	-	0	-
Grade, %	-	0	0	-	0	-
Peak Hour Factor	92	92	92	92	92	92
Heavy Vehicles, %	2	2	4	4	2	2
Mvmt Flow	0	582	543	0	5	11

Major/Minor	Major1		Major2		Minor2	
Conflicting Flow All	-	0	-	0	1125	543
Stage 1	-	-	-	-	543	-
Stage 2	-	-	-	-	582	-
Critical Hdwy	-	-	-	-	6.42	6.22
Critical Hdwy Stg 1	-	-	-	-	5.42	-
Critical Hdwy Stg 2	-	-	-	-	5.42	-
Follow-up Hdwy	-	-	-	-	3.518	3.318
Pot Cap-1 Maneuver	0	-	-	0	227	540
Stage 1	0	-	-	0	582	-
Stage 2	0	-	-	0	559	-
Platoon blocked, %		-	-			
Mov Cap-1 Maneuver	-	-	-	-	227	540
Mov Cap-2 Maneuver	-	-	-	-	227	-
Stage 1	-	-	-	-	582	-
Stage 2	-	-	-	-	559	-

Approach	EB	WB	SB
HCM Control Delay, s	0	0	15.2
HCM LOS			C

Minor Lane/Major Mvmt	EBT	WBT	SBLn1
Capacity (veh/h)	-	-	370
HCM Lane V/C Ratio	-	-	0.044
HCM Control Delay (s)	-	-	15.2
HCM Lane LOS	-	-	C
HCM 95th %tile Q(veh)	-	-	0.1

Intersection	
Int Delay, s/veh	1.3

Movement	EBT	EBR	WBL	WBT	NBL	NBR
Lane Configurations	↑			↑	⋔	
Traffic Vol, veh/h	505	35	20	465	35	25
Future Vol, veh/h	505	35	20	465	35	25
Conflicting Peds, #/hr	0	0	0	0	0	0
Sign Control	Free	Free	Free	Free	Stop	Stop
RT Channelized	-	None	-	None	-	None
Storage Length	-	-	-	-	0	-
Veh in Median Storage, #	0	-	-	0	0	-
Grade, %	0	-	-	0	0	-
Peak Hour Factor	92	92	92	92	92	92
Heavy Vehicles, %	2	2	4	4	2	2
Mvmt Flow	549	38	22	505	38	27

Major/Minor	Major1		Major2		Minor1	
Conflicting Flow All	0	0	587	0	1117	568
Stage 1	-	-	-	-	568	-
Stage 2	-	-	-	-	549	-
Critical Hdwy	-	-	4.14	-	6.42	6.22
Critical Hdwy Stg 1	-	-	-	-	5.42	-
Critical Hdwy Stg 2	-	-	-	-	5.42	-
Follow-up Hdwy	-	-	2.236	-	3.518	3.318
Pot Cap-1 Maneuver	-	-	978	-	229	522
Stage 1	-	-	-	-	567	-
Stage 2	-	-	-	-	579	-
Platoon blocked, %	-	-		-		
Mov Cap-1 Maneuver	-	-	978	-	222	522
Mov Cap-2 Maneuver	-	-	-	-	222	-
Stage 1	-	-	-	-	567	-
Stage 2	-	-	-	-	561	-

Approach	EB	WB	NB
HCM Control Delay, s	0	0.4	20.8
HCM LOS			C

Minor Lane/Major Mvmt	NBLn1	EBT	EBR	WBL	WBT
Capacity (veh/h)	292	-	-	978	-
HCM Lane V/C Ratio	0.223	-	-	0.022	-
HCM Control Delay (s)	20.8	-	-	8.8	-
HCM Lane LOS	C	-	-	A	-
HCM 95th %tile Q(veh)	0.8	-	-	0.1	-

Intersection	
Int Delay, s/veh	28.2

Movement	EBL	EBT	EBR	WBL	WBT	WBR	NBL	NBT	NBR	SBL	SBT	SBR
Lane Configurations												
Traffic Vol, veh/h	60	340	130	65	355	85	75	45	40	60	40	55
Future Vol, veh/h	60	340	130	65	355	85	75	45	40	60	40	55
Conflicting Peds, #/hr	0	0	0	0	0	0	0	0	0	0	0	0
Sign Control	Free	Free	Free	Free	Free	Free	Stop	Stop	Stop	Stop	Stop	Stop
RT Channelized	-	-	None	-	-	None	-	-	None	-	-	None
Storage Length	175	-	-	150	-	125	0	-	-	100	-	-
Veh in Median Storage, #	-	0	-	-	0	-	-	0	-	-	0	-
Grade, %	-	0	-	-	0	-	-	0	-	-	0	-
Peak Hour Factor	82	82	82	82	82	82	82	82	82	82	82	82
Heavy Vehicles, %	2	2	2	2	2	2	1	1	1	1	1	1
Mvmt Flow	73	415	159	79	433	104	91	55	49	73	49	67

Major/Minor	Major1			Major2			Minor1			Minor2		
Conflicting Flow All	537	0	0	574	0	0	1342	1336	495	1284	1311	433
Stage 1	-	-	-	-	-	-	641	641	-	591	591	-
Stage 2	-	-	-	-	-	-	701	695	-	693	720	-
Critical Hdwy	4.12	-	-	4.12	-	-	7.11	6.51	6.21	7.11	6.51	6.21
Critical Hdwy Stg 1	-	-	-	-	-	-	6.11	5.51	-	6.11	5.51	-
Critical Hdwy Stg 2	-	-	-	-	-	-	6.11	5.51	-	6.11	5.51	-
Follow-up Hdwy	2.218	-	-	2.218	-	-	3.509	4.009	3.309	3.509	4.009	3.309
Pot Cap-1 Maneuver	1031	-	-	999	-	-	130	154	577	142	160	625
Stage 1	-	-	-	-	-	-	465	471	-	495	496	-
Stage 2	-	-	-	-	-	-	431	445	-	435	434	-
Platoon blocked, %		-	-		-	-						
Mov Cap-1 Maneuver	1031	-	-	999	-	-	~ 75	132	577	79	137	625
Mov Cap-2 Maneuver	-	-	-	-	-	-	~ 75	132	-	79	137	-
Stage 1	-	-	-	-	-	-	432	438	-	460	457	-
Stage 2	-	-	-	-	-	-	317	410	-	324	403	-

Approach	EB	WB	NB	SB
HCM Control Delay, s	1	1.1	148.1	86.1
HCM LOS			F	F

Minor Lane/Major Mvmt	NBLn1	NBLn2	EBL	EBT	EBR	WBL	WBT	WBR	SBLn1	SBLn2
Capacity (veh/h)	75	207	1031	-	-	999	-	-	79	250
HCM Lane V/C Ratio	1.22	0.501	0.071	-	-	0.079	-	-	0.926	0.463
HCM Control Delay (s)	272	38.7	8.8	-	-	8.9	-	-	172.8	31.3
HCM Lane LOS	F	E	A	-	-	A	-	-	F	D
HCM 95th %tile Q(veh)	7	2.5	0.2	-	-	0.3	-	-	4.9	2.3

Notes

~: Volume exceeds capacity $: Delay exceeds 300s +: Computation Not Defined *: All major volume in platoon

HCM 6th Signalized Intersection Summary
1: Jackson Dr & WIS-60

05/19/2020

Movement	EBL	EBT	EBR	WBL	WBT	WBR	NBL	NBT	NBR	SBL	SBT	SBR
Lane Configurations												
Traffic Volume (veh/h)	65	525	85	60	510	80	95	45	60	75	35	80
Future Volume (veh/h)	65	525	85	60	510	80	95	45	60	75	35	80
Initial Q (Qb), veh	0	0	0	0	0	0	0	0	0	0	0	0
Ped-Bike Adj(A_pbT)	1.00		1.00	1.00		1.00	1.00		1.00	1.00		1.00
Parking Bus, Adj	1.00	1.00	1.00	1.00	1.00	1.00	1.00	1.00	1.00	1.00	1.00	1.00
Work Zone On Approach		No			No			No			No	
Adj Sat Flow, veh/h/ln	1870	1659	1659	1870	1870	1870	1885	1672	1672	1870	1659	1659
Adj Flow Rate, veh/h	66	536	87	61	520	82	97	46	61	77	36	82
Peak Hour Factor	0.98	0.98	0.98	0.98	0.98	0.98	0.98	0.98	0.98	0.98	0.98	0.98
Percent Heavy Veh, %	2	2	2	2	2	2	1	1	1	2	2	2
Cap, veh/h	494	901	146	105	649	98	244	117	155	256	81	184
Arrive On Green	0.08	0.65	0.65	0.47	0.47	0.47	0.18	0.18	0.18	0.18	0.18	0.18
Sat Flow, veh/h	1781	1392	226	101	1386	210	1284	652	864	1287	450	1025
Grp Volume(v), veh/h	66	0	623	663	0	0	97	0	107	77	0	118
Grp Sat Flow(s),veh/h/ln	1781	0	1617	1697	0	0	1284	0	1516	1287	0	1474
Q Serve(g_s), s	1.1	0.0	15.1	12.2	0.0	0.0	5.0	0.0	4.2	3.8	0.0	4.9
Cycle Q Clear(g_c), s	1.1	0.0	15.1	22.7	0.0	0.0	9.8	0.0	4.2	8.1	0.0	4.9
Prop In Lane	1.00		0.14	0.09		0.12	1.00		0.57	1.00		0.69
Lane Grp Cap(c), veh/h	494	0	1047	852	0	0	244	0	272	256	0	265
V/C Ratio(X)	0.13	0.00	0.60	0.78	0.00	0.00	0.40	0.00	0.39	0.30	0.00	0.45
Avail Cap(c_a), veh/h	999	0	1816	1166	0	0	674	0	779	686	0	757
HCM Platoon Ratio	1.00	1.00	1.00	1.00	1.00	1.00	1.00	1.00	1.00	1.00	1.00	1.00
Upstream Filter(I)	1.00	0.00	1.00	1.00	0.00	0.00	1.00	0.00	1.00	1.00	0.00	1.00
Uniform Delay (d), s/veh	6.2	0.0	6.9	15.4	0.0	0.0	29.3	0.0	24.7	28.2	0.0	24.9
Incr Delay (d2), s/veh	0.0	0.0	0.8	3.0	0.0	0.0	0.4	0.0	0.3	0.2	0.0	0.4
Initial Q Delay(d3),s/veh	0.0	0.0	0.0	0.0	0.0	0.0	0.0	0.0	0.0	0.0	0.0	0.0
%ile BackOfQ(95%),veh/ln	0.7	0.0	7.7	13.4	0.0	0.0	2.7	0.0	2.7	2.1	0.0	3.0
Unsig. Movement Delay, s/veh												
LnGrp Delay(d),s/veh	6.2	0.0	7.7	18.3	0.0	0.0	29.7	0.0	25.0	28.5	0.0	25.4
LnGrp LOS	A	A	A	B	A	A	C	A	C	C	A	C
Approach Vol, veh/h		689			663			204			195	
Approach Delay, s/veh		7.6			18.3			27.2			26.6	
Approach LOS		A			B			C			C	

Timer - Assigned Phs	1	2		4		6		8				
Phs Duration (G+Y+Rc), s	12.2	37.2		18.7		49.4		18.7				
Change Period (Y+Rc), s	6.5	* 5.3		6.5		* 5.3		6.5				
Max Green Setting (Gmax), s	25.0	* 45		35.0		* 77		35.0				
Max Q Clear Time (g_c+I1), s	3.1	24.7		11.8		17.1		10.1				
Green Ext Time (p_c), s	0.0	7.2		0.4		8.5		0.4				

Intersection Summary												
HCM 6th Ctrl Delay			16.1									
HCM 6th LOS			B									

Notes

* HCM 6th computational engine requires equal clearance times for the phases crossing the barrier.

Intersection	
Int Delay, s/veh	1.4

Movement	EBL	EBT	WBT	WBR	SBL	SBR
Lane Configurations						
Traffic Vol, veh/h	40	620	610	20	20	40
Future Vol, veh/h	40	620	610	20	20	40
Conflicting Peds, #/hr	0	0	0	0	0	0
Sign Control	Free	Free	Free	Free	Stop	Stop
RT Channelized	-	None	-	None	-	None
Storage Length	-	-	-	-	0	-
Veh in Median Storage, #	-	0	0	-	0	-
Grade, %	-	0	0	-	0	-
Peak Hour Factor	92	92	92	92	92	92
Heavy Vehicles, %	3	3	2	2	2	2
Mvmt Flow	43	674	663	22	22	43

Major/Minor	Major1		Major2		Minor2	
Conflicting Flow All	685	0	-	0	1434	674
Stage 1	-	-	-	-	674	-
Stage 2	-	-	-	-	760	-
Critical Hdwy	4.13	-	-	-	6.42	6.22
Critical Hdwy Stg 1	-	-	-	-	5.42	-
Critical Hdwy Stg 2	-	-	-	-	5.42	-
Follow-up Hdwy	2.227	-	-	-	3.518	3.318
Pot Cap-1 Maneuver	904	-	-	-	147	455
Stage 1	-	-	-	-	506	-
Stage 2	-	-	-	-	462	-
Platoon blocked, %		-	-	-		
Mov Cap-1 Maneuver	904	-	-	-	136	455
Mov Cap-2 Maneuver	-	-	-	-	136	-
Stage 1	-	-	-	-	468	-
Stage 2	-	-	-	-	462	-

Approach	EB	WB	SB
HCM Control Delay, s	0.6	0	23.9
HCM LOS			C

Minor Lane/Major Mvmt	EBL	EBT	WBT	WBR	SBLn1
Capacity (veh/h)	904	-	-	-	255
HCM Lane V/C Ratio	0.048	-	-	-	0.256
HCM Control Delay (s)	9.2	0	-	-	23.9
HCM Lane LOS	A	A	-	-	C
HCM 95th %tile Q(veh)	0.2	-	-	-	1

Intersection	
Int Delay, s/veh	42.6

Movement	EBL	EBT	EBR	WBL	WBT	WBR	NBL	NBT	NBR	SBL	SBT	SBR
Lane Configurations												
Traffic Vol, veh/h	20	410	210	55	420	20	175	0	45	20	0	35
Future Vol, veh/h	20	410	210	55	420	20	175	0	45	20	0	35
Conflicting Peds, #/hr	1	0	0	0	0	1	0	0	0	0	0	0
Sign Control	Free	Free	Free	Free	Free	Free	Stop	Stop	Stop	Stop	Stop	Stop
RT Channelized	-	-	None	-	-	None	-	-	None	-	-	None
Storage Length	-	-	-	-	-	-	-	-	-	-	-	-
Veh in Median Storage, #	-	0	-	-	0	-	-	0	-	-	0	-
Grade, %	-	0	-	-	0	-	-	0	-	-	0	-
Peak Hour Factor	94	94	94	94	94	94	94	94	94	94	94	94
Heavy Vehicles, %	3	3	3	3	3	3	2	2	2	2	2	2
Mvmt Flow	21	436	223	59	447	21	186	0	48	21	0	37

Major/Minor	Major1			Major2			Minor1			Minor2		
Conflicting Flow All	469	0	0	659	0	0	1184	1177	548	1191	1278	459
Stage 1	-	-	-	-	-	-	590	590	-	577	577	-
Stage 2	-	-	-	-	-	-	594	587	-	614	701	-
Critical Hdwy	4.13	-	-	4.13	-	-	7.12	6.52	6.22	7.12	6.52	6.22
Critical Hdwy Stg 1	-	-	-	-	-	-	6.12	5.52	-	6.12	5.52	-
Critical Hdwy Stg 2	-	-	-	-	-	-	6.12	5.52	-	6.12	5.52	-
Follow-up Hdwy	2.227	-	-	2.227	-	-	3.518	4.018	3.318	3.518	4.018	3.318
Pot Cap-1 Maneuver	1087	-	-	924	-	-	~ 166	191	536	164	166	602
Stage 1	-	-	-	-	-	-	494	495	-	502	502	-
Stage 2	-	-	-	-	-	-	491	497	-	479	441	-
Platoon blocked, %		-	-		-	-						
Mov Cap-1 Maneuver	1086	-	-	924	-	-	~ 142	169	536	136	147	601
Mov Cap-2 Maneuver	-	-	-	-	-	-	~ 142	169	-	136	147	-
Stage 1	-	-	-	-	-	-	478	479	-	485	458	-
Stage 2	-	-	-	-	-	-	421	453	-	422	427	-

Approach	EB	WB	NB	SB
HCM Control Delay, s	0.3	1	264.4	22.1
HCM LOS			F	C

Minor Lane/Major Mvmt	NBLn1	EBL	EBT	EBR	WBL	WBT	WBR	SBLn1
Capacity (veh/h)	167	1086	-	-	924	-	-	268
HCM Lane V/C Ratio	1.401	0.02	-	-	0.063	-	-	0.218
HCM Control Delay (s)	264.4	8.4	0	-	9.2	0	-	22.1
HCM Lane LOS	F	A	A	-	A	A	-	C
HCM 95th %tile Q(veh)	14.5	0.1	-	-	0.2	-	-	0.8

Notes

~: Volume exceeds capacity $: Delay exceeds 300s +: Computation Not Defined *: All major volume in platoon

Intersection	
Int Delay, s/veh	0

Movement	EBL	EBT	WBT	WBR	SBL	SBR
Lane Configurations		↑	↑		⋔	
Traffic Vol, veh/h	5	470	495	0	0	0
Future Vol, veh/h	5	470	495	0	0	0
Conflicting Peds, #/hr	0	0	0	0	0	0
Sign Control	Free	Free	Free	Free	Stop	Stop
RT Channelized	-	None	-	None	-	None
Storage Length	-	-	-	-	0	-
Veh in Median Storage, #	-	0	0	-	0	-
Grade, %	-	0	0	-	0	-
Peak Hour Factor	92	92	92	92	92	92
Heavy Vehicles, %	2	2	3	3	2	2
Mvmt Flow	5	511	538	0	0	0

Major/Minor	Major1		Major2		Minor2	
Conflicting Flow All	538	0	-	0	1059	538
Stage 1	-	-	-	-	538	-
Stage 2	-	-	-	-	521	-
Critical Hdwy	4.12	-	-	-	6.42	6.22
Critical Hdwy Stg 1	-	-	-	-	5.42	-
Critical Hdwy Stg 2	-	-	-	-	5.42	-
Follow-up Hdwy	2.218	-	-	-	3.518	3.318
Pot Cap-1 Maneuver	1030	-	-	0	249	543
Stage 1	-	-	-	0	585	-
Stage 2	-	-	-	0	596	-
Platoon blocked, %		-	-			
Mov Cap-1 Maneuver	1030	-	-	-	247	543
Mov Cap-2 Maneuver	-	-	-	-	247	-
Stage 1	-	-	-	-	581	-
Stage 2	-	-	-	-	596	-

Approach	EB	WB	SB
HCM Control Delay, s	0.1	0	0
HCM LOS			A

Minor Lane/Major Mvmt	EBL	EBT	WBT	SBLn1
Capacity (veh/h)	1030	-	-	-
HCM Lane V/C Ratio	0.005	-	-	-
HCM Control Delay (s)	8.5	-	-	0
HCM Lane LOS	A	-	-	A
HCM 95th %tile Q(veh)	0	-	-	-

Intersection	
Int Delay, s/veh	1.5

Movement	EBT	EBR	WBL	WBT	NBL	NBR
Lane Configurations	↑			↑	⋔	
Traffic Vol, veh/h	415	55	20	450	45	20
Future Vol, veh/h	415	55	20	450	45	20
Conflicting Peds, #/hr	0	0	0	0	0	0
Sign Control	Free	Free	Free	Free	Stop	Stop
RT Channelized	-	None	-	None	-	None
Storage Length	-	-	-	-	0	-
Veh in Median Storage, #	0	-	-	0	0	-
Grade, %	0	-	-	0	0	-
Peak Hour Factor	92	92	92	92	92	92
Heavy Vehicles, %	2	2	3	3	2	2
Mvmt Flow	451	60	22	489	49	22

Major/Minor	Major1		Major2		Minor1	
Conflicting Flow All	0	0	511	0	1014	481
Stage 1	-	-	-	-	481	-
Stage 2	-	-	-	-	533	-
Critical Hdwy	-	-	4.13	-	6.42	6.22
Critical Hdwy Stg 1	-	-	-	-	5.42	-
Critical Hdwy Stg 2	-	-	-	-	5.42	-
Follow-up Hdwy	-	-	2.227	-	3.518	3.318
Pot Cap-1 Maneuver	-	-	1049	-	264	585
Stage 1	-	-	-	-	622	-
Stage 2	-	-	-	-	588	-
Platoon blocked, %	-	-		-		
Mov Cap-1 Maneuver	-	-	1049	-	256	585
Mov Cap-2 Maneuver	-	-	-	-	256	-
Stage 1	-	-	-	-	622	-
Stage 2	-	-	-	-	571	-

Approach	EB	WB	NB
HCM Control Delay, s	0	0.4	20
HCM LOS			C

Minor Lane/Major Mvmt	NBLn1	EBT	EBR	WBL	WBT
Capacity (veh/h)	310	-	-	1049	-
HCM Lane V/C Ratio	0.228	-	-	0.021	-
HCM Control Delay (s)	20	-	-	8.5	-
HCM Lane LOS	C	-	-	A	-
HCM 95th %tile Q(veh)	0.9	-	-	0.1	-

Intersection	
Int Delay, s/veh	9.1

Movement	EBL	EBT	EBR	WBL	WBT	WBR	NBL	NBT	NBR	SBL	SBT	SBR
Lane Configurations												
Traffic Vol, veh/h	55	285	95	55	315	40	75	35	40	60	35	80
Future Vol, veh/h	55	285	95	55	315	40	75	35	40	60	35	80
Conflicting Peds, #/hr	0	0	0	0	0	0	0	0	0	0	0	0
Sign Control	Free	Free	Free	Free	Free	Free	Stop	Stop	Stop	Stop	Stop	Stop
RT Channelized	-	-	None	-	-	None	-	-	None	-	-	None
Storage Length	175	-	-	150	-	125	0	-	-	100	-	-
Veh in Median Storage, #	-	0	-	-	0	-	-	0	-	-	0	-
Grade, %	-	0	-	-	0	-	-	0	-	-	0	-
Peak Hour Factor	92	92	92	92	92	92	92	92	92	92	92	92
Heavy Vehicles, %	2	2	2	3	3	3	2	2	2	1	1	1
Mvmt Flow	60	310	103	60	342	43	82	38	43	65	38	87

Major/Minor	Major1			Major2			Minor1			Minor2		
Conflicting Flow All	385	0	0	413	0	0	1028	987	362	984	995	342
Stage 1	-	-	-	-	-	-	482	482	-	462	462	-
Stage 2	-	-	-	-	-	-	546	505	-	522	533	-
Critical Hdwy	4.12	-	-	4.13	-	-	7.12	6.52	6.22	7.11	6.51	6.21
Critical Hdwy Stg 1	-	-	-	-	-	-	6.12	5.52	-	6.11	5.51	-
Critical Hdwy Stg 2	-	-	-	-	-	-	6.12	5.52	-	6.11	5.51	-
Follow-up Hdwy	2.218	-	-	2.227	-	-	3.518	4.018	3.318	3.509	4.009	3.309
Pot Cap-1 Maneuver	1173	-	-	1141	-	-	212	247	683	228	246	703
Stage 1	-	-	-	-	-	-	565	553	-	582	566	-
Stage 2	-	-	-	-	-	-	522	540	-	540	527	-
Platoon blocked, %		-	-		-	-						
Mov Cap-1 Maneuver	1173	-	-	1141	-	-	149	222	683	171	221	703
Mov Cap-2 Maneuver	-	-	-	-	-	-	149	222	-	171	221	-
Stage 1	-	-	-	-	-	-	536	525	-	552	536	-
Stage 2	-	-	-	-	-	-	403	511	-	445	500	-

Approach	EB	WB	NB	SB
HCM Control Delay, s	1	1.1	36.8	24.4
HCM LOS			E	C

Minor Lane/Major Mvmt	NBLn1	NBLn2	EBL	EBT	EBR	WBL	WBT	WBR	SBLn1	SBLn2
Capacity (veh/h)	149	347	1173	-	-	1141	-	-	171	423
HCM Lane V/C Ratio	0.547	0.235	0.051	-	-	0.052	-	-	0.381	0.296
HCM Control Delay (s)	55.1	18.5	8.2	-	-	8.3	-	-	38.5	17
HCM Lane LOS	F	C	A	-	-	A	-	-	E	C
HCM 95th %tile Q(veh)	2.7	0.9	0.2	-	-	0.2	-	-	1.6	1.2

Appendix E: Transportation System Improvements with Background Traffic Operational Analysis

Base Year Background - Improved Capacity analysis inputs/outputs
Interim Year Background - Improved Capacity analysis inputs/outputs
Horizon Year Background Alt 1 - Improved Capacity analysis inputs/outputs
Horizon Year Background Alt 2 - Improved Capacity analysis inputs/outputs

HCM 6th Signalized Intersection Summary
1: Jackson Dr & WIS-60

05/19/2020

Movement	EBL	EBT	EBR	WBL	WBT	WBR	NBL	NBT	NBR	SBL	SBT	SBR
Lane Configurations												
Traffic Volume (veh/h)	70	330	30	10	335	20	110	50	20	45	25	180
Future Volume (veh/h)	70	330	30	10	335	20	110	50	20	45	25	180
Initial Q (Qb), veh	0	0	0	0	0	0	0	0	0	0	0	0
Ped-Bike Adj(A_pbT)	1.00		1.00	1.00		1.00	1.00		0.97	1.00		0.99
Parking Bus, Adj	1.00	1.00	1.00	1.00	1.00	1.00	1.00	1.00	1.00	1.00	1.00	1.00
Work Zone On Approach		No			No			No			No	
Adj Sat Flow, veh/h/ln	1752	1554	1554	1767	1767	1767	1826	1619	1619	1856	1646	1646
Adj Flow Rate, veh/h	73	344	31	10	349	21	115	52	21	47	26	188
Peak Hour Factor	0.96	0.96	0.96	0.96	0.96	0.96	0.96	0.96	0.96	0.96	0.96	0.96
Percent Heavy Veh, %	10	10	10	9	9	9	5	5	5	3	3	3
Cap, veh/h	509	724	65	70	495	29	294	300	121	441	47	342
Arrive On Green	0.10	0.52	0.52	0.30	0.30	0.30	0.28	0.28	0.28	0.28	0.28	0.28
Sat Flow, veh/h	1668	1404	127	16	1623	96	1136	1087	439	1310	172	1242
Grp Volume(v), veh/h	73	0	375	380	0	0	115	0	73	47	0	214
Grp Sat Flow(s),veh/h/ln	1668	0	1530	1735	0	0	1136	0	1525	1310	0	1414
Q Serve(g_s), s	1.5	0.0	8.9	0.0	0.0	0.0	5.4	0.0	2.1	1.6	0.0	7.3
Cycle Q Clear(g_c), s	1.5	0.0	8.9	10.9	0.0	0.0	12.8	0.0	2.1	3.7	0.0	7.3
Prop In Lane	1.00		0.08	0.03		0.06	1.00		0.29	1.00		0.88
Lane Grp Cap(c), veh/h	509	0	790	594	0	0	294	0	421	441	0	390
V/C Ratio(X)	0.14	0.00	0.47	0.64	0.00	0.00	0.39	0.00	0.17	0.11	0.00	0.55
Avail Cap(c_a), veh/h	1084	0	2067	1432	0	0	682	0	943	889	0	874
HCM Platoon Ratio	1.00	1.00	1.00	1.00	1.00	1.00	1.00	1.00	1.00	1.00	1.00	1.00
Upstream Filter(I)	1.00	0.00	1.00	1.00	0.00	0.00	1.00	0.00	1.00	1.00	0.00	1.00
Uniform Delay (d), s/veh	9.4	0.0	8.8	17.5	0.0	0.0	22.9	0.0	15.6	17.0	0.0	17.5
Incr Delay (d2), s/veh	0.0	0.0	0.7	1.7	0.0	0.0	0.3	0.0	0.1	0.0	0.0	0.4
Initial Q Delay(d3),s/veh	0.0	0.0	0.0	0.0	0.0	0.0	0.0	0.0	0.0	0.0	0.0	0.0
%ile BackOfQ(95%),veh/ln	0.9	0.0	4.7	7.7	0.0	0.0	2.5	0.0	1.2	0.8	0.0	4.1
Unsig. Movement Delay, s/veh												
LnGrp Delay(d),s/veh	9.5	0.0	9.4	19.2	0.0	0.0	23.3	0.0	15.7	17.0	0.0	18.0
LnGrp LOS	A	A	A	B	A	A	C	A	B	B	A	B
Approach Vol, veh/h		448			380			188			261	
Approach Delay, s/veh		9.4			19.2			20.3			17.8	
Approach LOS		A			B			C			B	

Timer - Assigned Phs	1	2		4		6		8
Phs Duration (G+Y+Rc), s	12.0	22.6		22.1		34.5		22.1
Change Period (Y+Rc), s	6.5	* 5.3		6.5		* 5.3		6.5
Max Green Setting (Gmax), s	25.0	* 45		35.0		* 77		35.0
Max Q Clear Time (g_c+I1), s	3.5	12.9		14.8		10.9		9.3
Green Ext Time (p_c), s	0.1	4.0		0.4		4.3		0.8

Intersection Summary	
HCM 6th Ctrl Delay	15.7
HCM 6th LOS	B

Notes

* HCM 6th computational engine requires equal clearance times for the phases crossing the barrier.

Intersection	
Int Delay, s/veh	0.2

Movement	EBL	EBT	WBT	WBR	SBL	SBR
Lane Configurations		↑	↑		⋔	
Traffic Vol, veh/h	10	385	365	5	5	0
Future Vol, veh/h	10	385	365	5	5	0
Conflicting Peds, #/hr	0	0	0	0	0	0
Sign Control	Free	Free	Free	Free	Stop	Stop
RT Channelized	-	None	-	None	-	None
Storage Length	-	-	-	-	0	-
Veh in Median Storage, #	-	0	0	-	0	-
Grade, %	-	0	0	-	0	-
Peak Hour Factor	92	92	92	92	92	92
Heavy Vehicles, %	4	4	9	9	2	2
Mvmt Flow	11	418	397	5	5	0

Major/Minor	Major1		Major2		Minor2	
Conflicting Flow All	402	0	-	0	840	400
Stage 1	-	-	-	-	400	-
Stage 2	-	-	-	-	440	-
Critical Hdwy	4.14	-	-	-	6.42	6.22
Critical Hdwy Stg 1	-	-	-	-	5.42	-
Critical Hdwy Stg 2	-	-	-	-	5.42	-
Follow-up Hdwy	2.236	-	-	-	3.518	3.318
Pot Cap-1 Maneuver	1146	-	-	-	335	650
Stage 1	-	-	-	-	677	-
Stage 2	-	-	-	-	649	-
Platoon blocked, %		-	-	-		
Mov Cap-1 Maneuver	1146	-	-	-	331	650
Mov Cap-2 Maneuver	-	-	-	-	331	-
Stage 1	-	-	-	-	668	-
Stage 2	-	-	-	-	649	-

Approach	EB	WB	SB
HCM Control Delay, s	0.2	0	16.1
HCM LOS			C

Minor Lane/Major Mvmt	EBL	EBT	WBT	WBR	SBLn1
Capacity (veh/h)	1146	-	-	-	331
HCM Lane V/C Ratio	0.009	-	-	-	0.016
HCM Control Delay (s)	8.2	-	-	-	16.1
HCM Lane LOS	A	-	-	-	C
HCM 95th %tile Q(veh)	0	-	-	-	0.1

Intersection	
Int Delay, s/veh	2.9

Movement	EBL	EBT	WBT	WBR	SBL	SBR
Lane Configurations						
Traffic Vol, veh/h	10	380	310	15	70	60
Future Vol, veh/h	10	380	310	15	70	60
Conflicting Peds, #/hr	0	0	0	0	0	0
Sign Control	Free	Free	Free	Free	Stop	Stop
RT Channelized	-	None	-	None	-	None
Storage Length	-	-	-	-	0	-
Veh in Median Storage, #	-	0	0	-	0	-
Grade, %	-	0	0	-	0	-
Peak Hour Factor	84	84	84	84	84	84
Heavy Vehicles, %	4	4	6	6	1	1
Mvmt Flow	12	452	369	18	83	71

Major/Minor	Major1		Major2		Minor2	
Conflicting Flow All	387	0	-	0	854	378
Stage 1	-	-	-	-	378	-
Stage 2	-	-	-	-	476	-
Critical Hdwy	4.14	-	-	-	6.41	6.21
Critical Hdwy Stg 1	-	-	-	-	5.41	-
Critical Hdwy Stg 2	-	-	-	-	5.41	-
Follow-up Hdwy	2.236	-	-	-	3.509	3.309
Pot Cap-1 Maneuver	1161	-	-	-	330	671
Stage 1	-	-	-	-	695	-
Stage 2	-	-	-	-	627	-
Platoon blocked, %		-	-	-		
Mov Cap-1 Maneuver	1161	-	-	-	325	671
Mov Cap-2 Maneuver	-	-	-	-	325	-
Stage 1	-	-	-	-	685	-
Stage 2	-	-	-	-	627	-

Approach	EB	WB	SB
HCM Control Delay, s	0.2	0	18.1
HCM LOS			C

Minor Lane/Major Mvmt	EBL	EBT	WBT	WBR	SBLn1
Capacity (veh/h)	1161	-	-	-	427
HCM Lane V/C Ratio	0.01	-	-	-	0.362
HCM Control Delay (s)	8.1	0	-	-	18.1
HCM Lane LOS	A	A	-	-	C
HCM 95th %tile Q(veh)	0	-	-	-	1.6

Intersection	
Int Delay, s/veh	0

Movement	EBL	EBT	WBT	WBR	SBL	SBR
Lane Configurations		↑	↑		⋔	
Traffic Vol, veh/h	0	450	325	0	0	0
Future Vol, veh/h	0	450	325	0	0	0
Conflicting Peds, #/hr	0	0	0	0	0	0
Sign Control	Free	Free	Free	Free	Stop	Stop
RT Channelized	-	None	-	None	-	None
Storage Length	-	-	-	-	0	-
Veh in Median Storage, #	-	0	0	-	0	-
Grade, %	-	0	0	-	0	-
Peak Hour Factor	92	92	92	92	92	92
Heavy Vehicles, %	6	6	6	6	2	2
Mvmt Flow	0	489	353	0	0	0

Major/Minor	Major1		Major2		Minor2	
Conflicting Flow All	-	0	-	0	842	353
Stage 1	-	-	-	-	353	-
Stage 2	-	-	-	-	489	-
Critical Hdwy	-	-	-	-	6.42	6.22
Critical Hdwy Stg 1	-	-	-	-	5.42	-
Critical Hdwy Stg 2	-	-	-	-	5.42	-
Follow-up Hdwy	-	-	-	-	3.518	3.318
Pot Cap-1 Maneuver	0	-	-	0	334	691
Stage 1	0	-	-	0	711	-
Stage 2	0	-	-	0	616	-
Platoon blocked, %		-	-			
Mov Cap-1 Maneuver	-	-	-	-	334	691
Mov Cap-2 Maneuver	-	-	-	-	334	-
Stage 1	-	-	-	-	711	-
Stage 2	-	-	-	-	616	-

Approach	EB	WB	SB
HCM Control Delay, s	0	0	0
HCM LOS			A

Minor Lane/Major Mvmt	EBT	WBT	SBLn1
Capacity (veh/h)	-	-	-
HCM Lane V/C Ratio	-	-	-
HCM Control Delay (s)	-	-	0
HCM Lane LOS	-	-	A
HCM 95th %tile Q(veh)	-	-	-

Intersection	
Int Delay, s/veh	0

Movement	EBT	EBR	WBL	WBT	NBL	NBR
Lane Configurations	↑			↑	⋔	
Traffic Vol, veh/h	450	0	0	325	0	0
Future Vol, veh/h	450	0	0	325	0	0
Conflicting Peds, #/hr	0	0	0	0	0	0
Sign Control	Free	Free	Free	Free	Stop	Stop
RT Channelized	-	None	-	None	-	None
Storage Length	-	-	-	-	0	-
Veh in Median Storage, #	0	-	-	0	0	-
Grade, %	0	-	-	0	0	-
Peak Hour Factor	92	92	92	92	92	92
Heavy Vehicles, %	6	6	6	6	2	2
Mvmt Flow	489	0	0	353	0	0

Major/Minor	Major1		Major2		Minor1	
Conflicting Flow All	0	-	-	-	842	489
Stage 1	-	-	-	-	489	-
Stage 2	-	-	-	-	353	-
Critical Hdwy	-	-	-	-	6.42	6.22
Critical Hdwy Stg 1	-	-	-	-	5.42	-
Critical Hdwy Stg 2	-	-	-	-	5.42	-
Follow-up Hdwy	-	-	-	-	3.518	3.318
Pot Cap-1 Maneuver	-	0	0	-	334	579
Stage 1	-	0	0	-	616	-
Stage 2	-	0	0	-	711	-
Platoon blocked, %	-			-		
Mov Cap-1 Maneuver	-	-	-	-	334	579
Mov Cap-2 Maneuver	-	-	-	-	334	-
Stage 1	-	-	-	-	616	-
Stage 2	-	-	-	-	711	-

Approach	EB	WB	NB
HCM Control Delay, s	0	0	0
HCM LOS			A

Minor Lane/Major Mvmt	NBLn1	EBT	WBT
Capacity (veh/h)	-	-	-
HCM Lane V/C Ratio	-	-	-
HCM Control Delay (s)	0	-	-
HCM Lane LOS	A	-	-
HCM 95th %tile Q(veh)	-	-	-

Movement	EBL	EBT	EBR	WBL	WBT	WBR	NBL	NBT	NBR	SBL	SBT	SBR
Lane Configurations												
Traffic Volume (veh/h)	70	345	35	15	235	85	25	20	25	80	15	65
Future Volume (veh/h)	70	345	35	15	235	85	25	20	25	80	15	65
Initial Q (Qb), veh	0	0	0	0	0	0	0	0	0	0	0	0
Ped-Bike Adj(A_pbT)	1.00		1.00	1.00		1.00	1.00		1.00	1.00		1.00
Parking Bus, Adj	1.00	1.00	1.00	1.00	1.00	1.00	1.00	1.00	1.00	1.00	1.00	1.00
Work Zone On Approach		No			No			No			No	
Adj Sat Flow, veh/h/ln	1811	1811	1811	1841	1841	1841	1796	1796	1796	1811	1811	1811
Adj Flow Rate, veh/h	83	411	42	18	280	101	30	24	30	95	18	77
Peak Hour Factor	0.84	0.84	0.84	0.84	0.84	0.84	0.84	0.84	0.84	0.84	0.84	0.84
Percent Heavy Veh, %	6	6	6	4	4	4	7	7	7	6	6	6
Cap, veh/h	628	689	70	528	785	664	281	103	95	572	54	231
Arrive On Green	0.43	0.43	0.43	0.43	0.43	0.43	0.18	0.18	0.18	0.18	0.18	0.18
Sat Flow, veh/h	970	1616	165	923	1841	1558	373	573	525	1307	299	1281
Grp Volume(v), veh/h	83	0	453	18	280	101	84	0	0	95	0	95
Grp Sat Flow(s),veh/h/ln	970	0	1781	923	1841	1558	1471	0	0	1307	0	1580
Q Serve(g_s), s	1.4	0.0	4.5	0.4	2.4	0.9	0.0	0.0	0.0	0.0	0.0	1.2
Cycle Q Clear(g_c), s	3.8	0.0	4.5	4.8	2.4	0.9	1.2	0.0	0.0	1.1	0.0	1.2
Prop In Lane	1.00		0.09	1.00		1.00	0.36		0.36	1.00		0.81
Lane Grp Cap(c), veh/h	628	0	760	528	785	664	479	0	0	572	0	285
V/C Ratio(X)	0.13	0.00	0.60	0.03	0.36	0.15	0.18	0.00	0.00	0.17	0.00	0.33
Avail Cap(c_a), veh/h	1296	0	1985	1162	2051	1736	1853	0	0	1794	0	1761
HCM Platoon Ratio	1.00	1.00	1.00	1.00	1.00	1.00	1.00	1.00	1.00	1.00	1.00	1.00
Upstream Filter(I)	1.00	0.00	1.00	1.00	1.00	1.00	1.00	0.00	0.00	1.00	0.00	1.00
Uniform Delay (d), s/veh	5.7	0.0	5.0	6.9	4.4	4.0	8.1	0.0	0.0	8.1	0.0	8.2
Incr Delay (d2), s/veh	0.1	0.0	0.8	0.0	0.3	0.1	0.2	0.0	0.0	0.1	0.0	0.7
Initial Q Delay(d3),s/veh	0.0	0.0	0.0	0.0	0.0	0.0	0.0	0.0	0.0	0.0	0.0	0.0
%ile BackOfQ(95%),veh/ln	0.3	0.0	1.1	0.1	0.4	0.1	0.4	0.0	0.0	0.5	0.0	0.6
Unsig. Movement Delay, s/veh												
LnGrp Delay(d),s/veh	5.8	0.0	5.8	6.9	4.7	4.1	8.3	0.0	0.0	8.3	0.0	8.9
LnGrp LOS	A	A	A	A	A	A	A	A	A	A	A	A
Approach Vol, veh/h		536			399			84			190	
Approach Delay, s/veh		5.8			4.7			8.3			8.6	
Approach LOS		A			A			A			A	

Timer - Assigned Phs	2	4	6	8
Phs Duration (G+Y+Rc), s	8.6	14.3	8.6	14.3
Change Period (Y+Rc), s	4.5	4.5	4.5	4.5
Max Green Setting (Gmax), s	25.5	25.5	25.5	25.5
Max Q Clear Time (g_c+I1), s	3.2	6.5	3.2	6.8
Green Ext Time (p_c), s	0.4	3.2	0.8	1.9

Intersection Summary	
HCM 6th Ctrl Delay	6.0
HCM 6th LOS	A

HCM 6th Signalized Intersection Summary
1: Jackson Dr & WIS-60

05/19/2020

Movement	EBL	EBT	EBR	WBL	WBT	WBR	NBL	NBT	NBR	SBL	SBT	SBR
Lane Configurations												
Traffic Volume (veh/h)	175	400	120	15	320	50	70	75	15	40	60	105
Future Volume (veh/h)	175	400	120	15	320	50	70	75	15	40	60	105
Initial Q (Qb), veh	0	0	0	0	0	0	0	0	0	0	0	0
Ped-Bike Adj(A_pbT)	1.00		0.98	1.00		0.98	0.99		0.99	0.99		0.97
Parking Bus, Adj	1.00	1.00	1.00	1.00	1.00	1.00	1.00	1.00	1.00	1.00	1.00	1.00
Work Zone On Approach		No			No			No			No	
Adj Sat Flow, veh/h/ln	1856	1646	1646	1841	1841	1841	1856	1646	1646	1885	1672	1672
Adj Flow Rate, veh/h	188	430	129	16	344	54	75	81	16	43	65	113
Peak Hour Factor	0.93	0.93	0.93	0.93	0.93	0.93	0.93	0.93	0.93	0.93	0.93	0.93
Percent Heavy Veh, %	3	3	3	4	4	4	3	3	3	1	1	1
Cap, veh/h	601	688	206	75	483	74	265	297	59	351	120	208
Arrive On Green	0.13	0.57	0.57	0.32	0.32	0.32	0.22	0.22	0.22	0.22	0.22	0.22
Sat Flow, veh/h	1767	1208	363	27	1503	230	1190	1332	263	1300	537	933
Grp Volume(v), veh/h	188	0	559	414	0	0	75	0	97	43	0	178
Grp Sat Flow(s),veh/h/ln	1767	0	1571	1760	0	0	1190	0	1595	1300	0	1469
Q Serve(g_s), s	3.4	0.0	13.5	0.9	0.0	0.0	3.4	0.0	2.9	1.6	0.0	6.1
Cycle Q Clear(g_c), s	3.4	0.0	13.5	11.6	0.0	0.0	9.5	0.0	2.9	4.5	0.0	6.1
Prop In Lane	1.00		0.23	0.04		0.13	1.00		0.16	1.00		0.63
Lane Grp Cap(c), veh/h	601	0	894	631	0	0	265	0	356	351	0	328
V/C Ratio(X)	0.31	0.00	0.63	0.66	0.00	0.00	0.28	0.00	0.27	0.12	0.00	0.54
Avail Cap(c_a), veh/h	1142	0	2115	1438	0	0	733	0	983	862	0	905
HCM Platoon Ratio	1.00	1.00	1.00	1.00	1.00	1.00	1.00	1.00	1.00	1.00	1.00	1.00
Upstream Filter(I)	1.00	0.00	1.00	1.00	0.00	0.00	1.00	0.00	1.00	1.00	0.00	1.00
Uniform Delay (d), s/veh	8.3	0.0	8.2	17.0	0.0	0.0	23.7	0.0	18.3	20.1	0.0	19.5
Incr Delay (d2), s/veh	0.1	0.0	1.1	1.7	0.0	0.0	0.2	0.0	0.2	0.1	0.0	0.5
Initial Q Delay(d3),s/veh	0.0	0.0	0.0	0.0	0.0	0.0	0.0	0.0	0.0	0.0	0.0	0.0
%ile BackOfQ(95%),veh/ln	2.1	0.0	6.9	8.2	0.0	0.0	1.7	0.0	1.8	0.8	0.0	3.6
Unsig. Movement Delay, s/veh												
LnGrp Delay(d),s/veh	8.4	0.0	9.2	18.7	0.0	0.0	23.9	0.0	18.4	20.2	0.0	20.0
LnGrp LOS	A	A	A	B	A	A	C	A	B	C	A	C
Approach Vol, veh/h		747			414			172			221	
Approach Delay, s/veh		9.0			18.7			20.8			20.1	
Approach LOS		A			B			C			C	

Timer - Assigned Phs	1	2		4		6		8
Phs Duration (G+Y+Rc), s	14.1	23.6		19.2		37.6		19.2
Change Period (Y+Rc), s	6.5	* 5.3		6.5		* 5.3		6.5
Max Green Setting (Gmax), s	25.0	* 45		35.0		* 77		35.0
Max Q Clear Time (g_c+I1), s	5.4	13.6		11.5		15.5		8.1
Green Ext Time (p_c), s	0.2	4.5		0.4		7.4		0.6

Intersection Summary	
HCM 6th Ctrl Delay	14.5
HCM 6th LOS	B

Notes

* HCM 6th computational engine requires equal clearance times for the phases crossing the barrier.

Intersection	
Int Delay, s/veh	0.3

Movement	EBL	EBT	WBT	WBR	SBL	SBR
Lane Configurations		↑	↑		⋔	
Traffic Vol, veh/h	5	450	380	0	10	5
Future Vol, veh/h	5	450	380	0	10	5
Conflicting Peds, #/hr	0	0	0	0	0	0
Sign Control	Free	Free	Free	Free	Stop	Stop
RT Channelized	-	None	-	None	-	None
Storage Length	-	-	-	-	0	-
Veh in Median Storage, #	-	0	0	-	0	-
Grade, %	-	0	0	-	0	-
Peak Hour Factor	92	92	92	92	92	92
Heavy Vehicles, %	3	3	4	4	2	2
Mvmt Flow	5	489	413	0	11	5

Major/Minor	Major1		Major2		Minor2	
Conflicting Flow All	413	0	-	0	912	413
Stage 1	-	-	-	-	413	-
Stage 2	-	-	-	-	499	-
Critical Hdwy	4.13	-	-	-	6.42	6.22
Critical Hdwy Stg 1	-	-	-	-	5.42	-
Critical Hdwy Stg 2	-	-	-	-	5.42	-
Follow-up Hdwy	2.227	-	-	-	3.518	3.318
Pot Cap-1 Maneuver	1141	-	-	0	304	639
Stage 1	-	-	-	0	668	-
Stage 2	-	-	-	0	610	-
Platoon blocked, %		-	-			
Mov Cap-1 Maneuver	1141	-	-	-	302	639
Mov Cap-2 Maneuver	-	-	-	-	302	-
Stage 1	-	-	-	-	664	-
Stage 2	-	-	-	-	610	-

Approach	EB	WB	SB
HCM Control Delay, s	0.1	0	15.3
HCM LOS			C

Minor Lane/Major Mvmt	EBL	EBT	WBT	SBLn1
Capacity (veh/h)	1141	-	-	366
HCM Lane V/C Ratio	0.005	-	-	0.045
HCM Control Delay (s)	8.2	-	-	15.3
HCM Lane LOS	A	-	-	C
HCM 95th %tile Q(veh)	0	-	-	0.1

Intersection	
Int Delay, s/veh	1.1

Movement	EBL	EBT	WBT	WBR	SBL	SBR
Lane Configurations						
Traffic Vol, veh/h	50	410	370	45	20	10
Future Vol, veh/h	50	410	370	45	20	10
Conflicting Peds, #/hr	1	0	0	1	0	0
Sign Control	Free	Free	Free	Free	Stop	Stop
RT Channelized	-	None	-	None	-	None
Storage Length	-	-	-	-	0	-
Veh in Median Storage, #	-	0	0	-	0	-
Grade, %	-	0	0	-	0	-
Peak Hour Factor	87	87	87	87	87	87
Heavy Vehicles, %	3	3	4	4	1	1
Mvmt Flow	57	471	425	52	23	11

Major/Minor	Major1		Major2		Minor2	
Conflicting Flow All	478	0	-	0	1037	452
Stage 1	-	-	-	-	452	-
Stage 2	-	-	-	-	585	-
Critical Hdwy	4.13	-	-	-	6.41	6.21
Critical Hdwy Stg 1	-	-	-	-	5.41	-
Critical Hdwy Stg 2	-	-	-	-	5.41	-
Follow-up Hdwy	2.227	-	-	-	3.509	3.309
Pot Cap-1 Maneuver	1079	-	-	-	257	610
Stage 1	-	-	-	-	643	-
Stage 2	-	-	-	-	559	-
Platoon blocked, %		-	-	-		
Mov Cap-1 Maneuver	1078	-	-	-	238	609
Mov Cap-2 Maneuver	-	-	-	-	238	-
Stage 1	-	-	-	-	596	-
Stage 2	-	-	-	-	558	-

Approach	EB	WB	SB
HCM Control Delay, s	0.9	0	18.6
HCM LOS			C

Minor Lane/Major Mvmt	EBL	EBT	WBT	WBR	SBLn1
Capacity (veh/h)	1078	-	-	-	299
HCM Lane V/C Ratio	0.053	-	-	-	0.115
HCM Control Delay (s)	8.5	0	-	-	18.6
HCM Lane LOS	A	A	-	-	C
HCM 95th %tile Q(veh)	0.2	-	-	-	0.4

Intersection	
Int Delay, s/veh	0

Movement	EBL	EBT	WBT	WBR	SBL	SBR
Lane Configurations		↑	↑		⋔	
Traffic Vol, veh/h	0	430	415	0	0	0
Future Vol, veh/h	0	430	415	0	0	0
Conflicting Peds, #/hr	0	0	0	0	0	0
Sign Control	Free	Free	Free	Free	Stop	Stop
RT Channelized	-	None	-	None	-	None
Storage Length	-	-	-	-	0	-
Veh in Median Storage, #	-	0	0	-	0	-
Grade, %	-	0	0	-	0	-
Peak Hour Factor	92	92	92	92	92	92
Heavy Vehicles, %	2	2	4	4	2	2
Mvmt Flow	0	467	451	0	0	0

Major/Minor	Major1		Major2		Minor2	
Conflicting Flow All	-	0	-	0	918	451
Stage 1	-	-	-	-	451	-
Stage 2	-	-	-	-	467	-
Critical Hdwy	-	-	-	-	6.42	6.22
Critical Hdwy Stg 1	-	-	-	-	5.42	-
Critical Hdwy Stg 2	-	-	-	-	5.42	-
Follow-up Hdwy	-	-	-	-	3.518	3.318
Pot Cap-1 Maneuver	0	-	-	0	302	608
Stage 1	0	-	-	0	642	-
Stage 2	0	-	-	0	631	-
Platoon blocked, %		-	-			
Mov Cap-1 Maneuver	-	-	-	-	302	608
Mov Cap-2 Maneuver	-	-	-	-	302	-
Stage 1	-	-	-	-	642	-
Stage 2	-	-	-	-	631	-

Approach	EB	WB	SB
HCM Control Delay, s	0	0	0
HCM LOS			A

Minor Lane/Major Mvmt	EBT	WBT	SBLn1
Capacity (veh/h)	-	-	-
HCM Lane V/C Ratio	-	-	-
HCM Control Delay (s)	-	-	0
HCM Lane LOS	-	-	A
HCM 95th %tile Q(veh)	-	-	-

Intersection	
Int Delay, s/veh	0

Movement	EBT	EBR	WBL	WBT	NBL	NBR
Lane Configurations	↑			↑	⋔	
Traffic Vol, veh/h	430	0	0	415	0	0
Future Vol, veh/h	430	0	0	415	0	0
Conflicting Peds, #/hr	0	0	0	0	0	0
Sign Control	Free	Free	Free	Free	Stop	Stop
RT Channelized	-	None	-	None	-	None
Storage Length	-	-	-	-	0	-
Veh in Median Storage, #	0	-	-	0	0	-
Grade, %	0	-	-	0	0	-
Peak Hour Factor	92	92	92	92	92	92
Heavy Vehicles, %	2	2	4	4	2	2
Mvmt Flow	467	0	0	451	0	0

Major/Minor	Major1		Major2		Minor1	
Conflicting Flow All	0	-	-	-	918	467
Stage 1	-	-	-	-	467	-
Stage 2	-	-	-	-	451	-
Critical Hdwy	-	-	-	-	6.42	6.22
Critical Hdwy Stg 1	-	-	-	-	5.42	-
Critical Hdwy Stg 2	-	-	-	-	5.42	-
Follow-up Hdwy	-	-	-	-	3.518	3.318
Pot Cap-1 Maneuver	-	0	0	-	302	596
Stage 1	-	0	0	-	631	-
Stage 2	-	0	0	-	642	-
Platoon blocked, %	-			-		
Mov Cap-1 Maneuver	-	-	-	-	302	596
Mov Cap-2 Maneuver	-	-	-	-	302	-
Stage 1	-	-	-	-	631	-
Stage 2	-	-	-	-	642	-

Approach	EB	WB	NB
HCM Control Delay, s	0	0	0
HCM LOS			A

Minor Lane/Major Mvmt	NBLn1	EBT	WBT
Capacity (veh/h)	-	-	-
HCM Lane V/C Ratio	-	-	-
HCM Control Delay (s)	0	-	-
HCM Lane LOS	A	-	-
HCM 95th %tile Q(veh)	-	-	-

Movement	EBL	EBT	EBR	WBL	WBT	WBR	NBL	NBT	NBR	SBL	SBT	SBR
Lane Configurations												
Traffic Volume (veh/h)	55	275	100	35	310	80	50	40	20	55	35	55
Future Volume (veh/h)	55	275	100	35	310	80	50	40	20	55	35	55
Initial Q (Qb), veh	0	0	0	0	0	0	0	0	0	0	0	0
Ped-Bike Adj(A_pbT)	1.00		1.00	1.00		0.98	1.00		0.98	1.00		1.00
Parking Bus, Adj	1.00	1.00	1.00	1.00	1.00	1.00	1.00	1.00	1.00	1.00	1.00	1.00
Work Zone On Approach		No			No			No			No	
Adj Sat Flow, veh/h/ln	1870	1870	1870	1870	1870	1870	1885	1885	1885	1885	1885	1885
Adj Flow Rate, veh/h	67	335	122	43	378	98	61	49	24	67	43	67
Peak Hour Factor	0.82	0.82	0.82	0.82	0.82	0.82	0.82	0.82	0.82	0.82	0.82	0.82
Percent Heavy Veh, %	2	2	2	2	2	2	1	1	1	1	1	1
Cap, veh/h	568	562	205	524	803	667	313	118	46	603	125	194
Arrive On Green	0.43	0.43	0.43	0.43	0.43	0.43	0.19	0.19	0.19	0.19	0.19	0.19
Sat Flow, veh/h	918	1308	476	934	1870	1552	482	632	243	1338	664	1035
Grp Volume(v), veh/h	67	0	457	43	378	98	134	0	0	67	0	110
Grp Sat Flow(s),veh/h/ln	918	0	1785	934	1870	1552	1357	0	0	1338	0	1699
Q Serve(g_s), s	1.3	0.0	4.6	0.9	3.4	0.9	1.0	0.0	0.0	0.0	0.0	1.3
Cycle Q Clear(g_c), s	4.7	0.0	4.6	5.5	3.4	0.9	2.4	0.0	0.0	0.7	0.0	1.3
Prop In Lane	1.00		0.27	1.00		1.00	0.46		0.18	1.00		0.61
Lane Grp Cap(c), veh/h	568	0	767	524	803	667	477	0	0	603	0	319
V/C Ratio(X)	0.12	0.00	0.60	0.08	0.47	0.15	0.28	0.00	0.00	0.11	0.00	0.35
Avail Cap(c_a), veh/h	1170	0	1936	1137	2029	1684	1836	0	0	1803	0	1843
HCM Platoon Ratio	1.00	1.00	1.00	1.00	1.00	1.00	1.00	1.00	1.00	1.00	1.00	1.00
Upstream Filter(I)	1.00	0.00	1.00	1.00	1.00	1.00	1.00	0.00	0.00	1.00	0.00	1.00
Uniform Delay (d), s/veh	6.5	0.0	5.1	7.2	4.8	4.1	8.7	0.0	0.0	8.1	0.0	8.3
Incr Delay (d2), s/veh	0.1	0.0	0.7	0.1	0.4	0.1	0.3	0.0	0.0	0.1	0.0	0.6
Initial Q Delay(d3),s/veh	0.0	0.0	0.0	0.0	0.0	0.0	0.0	0.0	0.0	0.0	0.0	0.0
%ile BackOfQ(95%),veh/ln	0.3	0.0	1.2	0.2	0.7	0.2	0.8	0.0	0.0	0.4	0.0	0.7
Unsig. Movement Delay, s/veh												
LnGrp Delay(d),s/veh	6.6	0.0	5.9	7.3	5.2	4.2	9.0	0.0	0.0	8.1	0.0	8.9
LnGrp LOS	A	A	A	A	A	A	A	A	A	A	A	A
Approach Vol, veh/h		524			519			134			177	
Approach Delay, s/veh		6.0			5.2			9.0			8.6	
Approach LOS		A			A			A			A	

Timer - Assigned Phs	2	4	6	8
Phs Duration (G+Y+Rc), s	8.9	14.6	8.9	14.6
Change Period (Y+Rc), s	4.5	4.5	4.5	4.5
Max Green Setting (Gmax), s	25.5	25.5	25.5	25.5
Max Q Clear Time (g_c+I1), s	4.4	6.7	3.3	7.5
Green Ext Time (p_c), s	0.7	3.2	0.8	2.6

Intersection Summary	
HCM 6th Ctrl Delay	6.3
HCM 6th LOS	A

HCM 6th Signalized Intersection Summary
1: Jackson Dr & WIS-60

05/19/2020

Movement	EBL	EBT	EBR	WBL	WBT	WBR	NBL	NBT	NBR	SBL	SBT	SBR
Lane Configurations												
Traffic Volume (veh/h)	65	315	80	15	345	35	90	40	15	25	30	80
Future Volume (veh/h)	65	315	80	15	345	35	90	40	15	25	30	80
Initial Q (Qb), veh	0	0	0	0	0	0	0	0	0	0	0	0
Ped-Bike Adj(A_pbT)	1.00		1.00	1.00		1.00	1.00		1.00	1.00		1.00
Parking Bus, Adj	1.00	1.00	1.00	1.00	1.00	1.00	1.00	1.00	1.00	1.00	1.00	1.00
Work Zone On Approach		No			No			No			No	
Adj Sat Flow, veh/h/ln	1870	1659	1659	1870	1870	1870	1885	1672	1672	1870	1659	1659
Adj Flow Rate, veh/h	66	321	82	15	352	36	92	41	15	26	31	82
Peak Hour Factor	0.98	0.98	0.98	0.98	0.98	0.98	0.98	0.98	0.98	0.98	0.98	0.98
Percent Heavy Veh, %	2	2	2	2	2	2	1	1	1	2	2	2
Cap, veh/h	601	709	181	85	531	53	321	235	86	380	81	214
Arrive On Green	0.10	0.56	0.56	0.33	0.33	0.33	0.20	0.20	0.20	0.20	0.20	0.20
Sat Flow, veh/h	1781	1274	325	26	1628	162	1290	1168	427	1348	402	1065
Grp Volume(v), veh/h	66	0	403	403	0	0	92	0	56	26	0	113
Grp Sat Flow(s),veh/h/ln	1781	0	1599	1816	0	0	1290	0	1595	1348	0	1467
Q Serve(g_s), s	1.0	0.0	7.3	0.0	0.0	0.0	3.2	0.0	1.4	0.8	0.0	3.2
Cycle Q Clear(g_c), s	1.0	0.0	7.3	9.2	0.0	0.0	6.5	0.0	1.4	2.2	0.0	3.2
Prop In Lane	1.00		0.20	0.04		0.09	1.00		0.27	1.00		0.73
Lane Grp Cap(c), veh/h	601	0	890	669	0	0	321	0	321	380	0	295
V/C Ratio(X)	0.11	0.00	0.45	0.60	0.00	0.00	0.29	0.00	0.17	0.07	0.00	0.38
Avail Cap(c_a), veh/h	1342	0	2511	1733	0	0	988	0	1146	1077	0	1054
HCM Platoon Ratio	1.00	1.00	1.00	1.00	1.00	1.00	1.00	1.00	1.00	1.00	1.00	1.00
Upstream Filter(I)	1.00	0.00	1.00	1.00	0.00	0.00	1.00	0.00	1.00	1.00	0.00	1.00
Uniform Delay (d), s/veh	7.3	0.0	6.4	14.2	0.0	0.0	19.7	0.0	16.1	17.0	0.0	16.8
Incr Delay (d2), s/veh	0.0	0.0	0.5	1.3	0.0	0.0	0.2	0.0	0.1	0.0	0.0	0.3
Initial Q Delay(d3),s/veh	0.0	0.0	0.0	0.0	0.0	0.0	0.0	0.0	0.0	0.0	0.0	0.0
%ile BackOfQ(95%),veh/ln	0.6	0.0	3.5	6.4	0.0	0.0	1.6	0.0	0.9	0.4	0.0	1.8
Unsig. Movement Delay, s/veh												
LnGrp Delay(d),s/veh	7.3	0.0	6.9	15.4	0.0	0.0	19.8	0.0	16.2	17.1	0.0	17.2
LnGrp LOS	A	A	A	B	A	A	B	A	B	B	A	B
Approach Vol, veh/h		469			403			148			139	
Approach Delay, s/veh		7.0			15.4			18.5			17.1	
Approach LOS		A			B			B			B	

Timer - Assigned Phs	1	2		4		6		8
Phs Duration (G+Y+Rc), s	11.2	21.2		16.3		32.4		16.3
Change Period (Y+Rc), s	6.5	* 5.3		6.5		* 5.3		6.5
Max Green Setting (Gmax), s	25.0	* 45		35.0		* 77		35.0
Max Q Clear Time (g_c+I1), s	3.0	11.2		8.5		9.3		5.2
Green Ext Time (p_c), s	0.0	4.4		0.2		4.7		0.4

Intersection Summary	
HCM 6th Ctrl Delay	12.6
HCM 6th LOS	B

Notes

* HCM 6th computational engine requires equal clearance times for the phases crossing the barrier.

Intersection	
Int Delay, s/veh	0

Movement	EBL	EBT	WBT	WBR	SBL	SBR
Lane Configurations		↑	↑		⋔	
Traffic Vol, veh/h	0	355	395	0	0	0
Future Vol, veh/h	0	355	395	0	0	0
Conflicting Peds, #/hr	0	0	0	0	0	0
Sign Control	Free	Free	Free	Free	Stop	Stop
RT Channelized	-	None	-	None	-	None
Storage Length	-	-	-	-	0	-
Veh in Median Storage, #	-	0	0	-	0	-
Grade, %	-	0	0	-	0	-
Peak Hour Factor	92	92	92	92	92	92
Heavy Vehicles, %	3	3	2	2	2	2
Mvmt Flow	0	386	429	0	0	0

Major/Minor	Major1		Major2		Minor2	
Conflicting Flow All	-	0	-	0	815	429
Stage 1	-	-	-	-	429	-
Stage 2	-	-	-	-	386	-
Critical Hdwy	-	-	-	-	6.42	6.22
Critical Hdwy Stg 1	-	-	-	-	5.42	-
Critical Hdwy Stg 2	-	-	-	-	5.42	-
Follow-up Hdwy	-	-	-	-	3.518	3.318
Pot Cap-1 Maneuver	0	-	-	0	347	626
Stage 1	0	-	-	0	657	-
Stage 2	0	-	-	0	687	-
Platoon blocked, %		-	-			
Mov Cap-1 Maneuver	-	-	-	-	347	626
Mov Cap-2 Maneuver	-	-	-	-	347	-
Stage 1	-	-	-	-	657	-
Stage 2	-	-	-	-	687	-

Approach	EB	WB	SB
HCM Control Delay, s	0	0	0
HCM LOS			A

Minor Lane/Major Mvmt	EBT	WBT	SBLn1
Capacity (veh/h)	-	-	-
HCM Lane V/C Ratio	-	-	-
HCM Control Delay (s)	-	-	0
HCM Lane LOS	-	-	A
HCM 95th %tile Q(veh)	-	-	-

Intersection	
Int Delay, s/veh	1.1

Movement	EBL	EBT	WBT	WBR	SBL	SBR
Lane Configurations						
Traffic Vol, veh/h	20	335	360	20	20	35
Future Vol, veh/h	20	335	360	20	20	35
Conflicting Peds, #/hr	1	0	0	1	0	0
Sign Control	Free	Free	Free	Free	Stop	Stop
RT Channelized	-	None	-	None	-	None
Storage Length	-	-	-	-	0	-
Veh in Median Storage, #	-	0	0	-	0	-
Grade, %	-	0	0	-	0	-
Peak Hour Factor	94	94	94	94	94	94
Heavy Vehicles, %	3	3	3	3	2	2
Mvmt Flow	21	356	383	21	21	37

Major/Minor	Major1		Major2		Minor2	
Conflicting Flow All	405	0	-	0	793	395
Stage 1	-	-	-	-	395	-
Stage 2	-	-	-	-	398	-
Critical Hdwy	4.13	-	-	-	6.42	6.22
Critical Hdwy Stg 1	-	-	-	-	5.42	-
Critical Hdwy Stg 2	-	-	-	-	5.42	-
Follow-up Hdwy	2.227	-	-	-	3.518	3.318
Pot Cap-1 Maneuver	1148	-	-	-	358	654
Stage 1	-	-	-	-	681	-
Stage 2	-	-	-	-	678	-
Platoon blocked, %		-	-	-		
Mov Cap-1 Maneuver	1147	-	-	-	349	653
Mov Cap-2 Maneuver	-	-	-	-	349	-
Stage 1	-	-	-	-	665	-
Stage 2	-	-	-	-	677	-

Approach	EB	WB	SB
HCM Control Delay, s	0.5	0	13.2
HCM LOS			B

Minor Lane/Major Mvmt	EBL	EBT	WBT	WBR	SBLn1
Capacity (veh/h)	1147	-	-	-	496
HCM Lane V/C Ratio	0.019	-	-	-	0.118
HCM Control Delay (s)	8.2	0	-	-	13.2
HCM Lane LOS	A	A	-	-	B
HCM 95th %tile Q(veh)	0.1	-	-	-	0.4

Intersection	
Int Delay, s/veh	0

Movement	EBL	EBT	WBT	WBR	SBL	SBR
Lane Configurations		↑	↑		⋔	
Traffic Vol, veh/h	0	355	380	0	0	0
Future Vol, veh/h	0	355	380	0	0	0
Conflicting Peds, #/hr	0	0	0	0	0	0
Sign Control	Free	Free	Free	Free	Stop	Stop
RT Channelized	-	None	-	None	-	None
Storage Length	-	-	-	-	0	-
Veh in Median Storage, #	-	0	0	-	0	-
Grade, %	-	0	0	-	0	-
Peak Hour Factor	92	92	92	92	92	92
Heavy Vehicles, %	2	2	3	3	2	2
Mvmt Flow	0	386	413	0	0	0

Major/Minor	Major1		Major2		Minor2	
Conflicting Flow All	-	0	-	0	799	413
Stage 1	-	-	-	-	413	-
Stage 2	-	-	-	-	386	-
Critical Hdwy	-	-	-	-	6.42	6.22
Critical Hdwy Stg 1	-	-	-	-	5.42	-
Critical Hdwy Stg 2	-	-	-	-	5.42	-
Follow-up Hdwy	-	-	-	-	3.518	3.318
Pot Cap-1 Maneuver	0	-	-	0	355	639
Stage 1	0	-	-	0	668	-
Stage 2	0	-	-	0	687	-
Platoon blocked, %		-	-			
Mov Cap-1 Maneuver	-	-	-	-	355	639
Mov Cap-2 Maneuver	-	-	-	-	355	-
Stage 1	-	-	-	-	668	-
Stage 2	-	-	-	-	687	-

Approach	EB	WB	SB
HCM Control Delay, s	0	0	0
HCM LOS			A

Minor Lane/Major Mvmt	EBT	WBT	SBLn1
Capacity (veh/h)	-	-	-
HCM Lane V/C Ratio	-	-	-
HCM Control Delay (s)	-	-	0
HCM Lane LOS	-	-	A
HCM 95th %tile Q(veh)	-	-	-

Intersection	
Int Delay, s/veh	0

Movement	EBT	EBR	WBL	WBT	NBL	NBR
Lane Configurations	↑			↑	⋔	
Traffic Vol, veh/h	355	0	0	380	0	0
Future Vol, veh/h	355	0	0	380	0	0
Conflicting Peds, #/hr	0	0	0	0	0	0
Sign Control	Free	Free	Free	Free	Stop	Stop
RT Channelized	-	None	-	None	-	None
Storage Length	-	-	-	-	0	-
Veh in Median Storage, #	0	-	-	0	0	-
Grade, %	0	-	-	0	0	-
Peak Hour Factor	92	92	92	92	92	92
Heavy Vehicles, %	2	2	3	3	2	2
Mvmt Flow	386	0	0	413	0	0

Major/Minor	Major1		Major2		Minor1	
Conflicting Flow All	0	-	-	-	799	386
Stage 1	-	-	-	-	386	-
Stage 2	-	-	-	-	413	-
Critical Hdwy	-	-	-	-	6.42	6.22
Critical Hdwy Stg 1	-	-	-	-	5.42	-
Critical Hdwy Stg 2	-	-	-	-	5.42	-
Follow-up Hdwy	-	-	-	-	3.518	3.318
Pot Cap-1 Maneuver	-	0	0	-	355	662
Stage 1	-	0	0	-	687	-
Stage 2	-	0	0	-	668	-
Platoon blocked, %	-			-		
Mov Cap-1 Maneuver	-	-	-	-	355	662
Mov Cap-2 Maneuver	-	-	-	-	355	-
Stage 1	-	-	-	-	687	-
Stage 2	-	-	-	-	668	-

Approach	EB	WB	NB
HCM Control Delay, s	0	0	0
HCM LOS			A

Minor Lane/Major Mvmt	NBLn1	EBT	WBT
Capacity (veh/h)	-	-	-
HCM Lane V/C Ratio	-	-	-
HCM Control Delay (s)	0	-	-
HCM Lane LOS	A	-	-
HCM 95th %tile Q(veh)	-	-	-

Movement	EBL	EBT	EBR	WBL	WBT	WBR	NBL	NBT	NBR	SBL	SBT	SBR
Lane Configurations												
Traffic Volume (veh/h)	50	235	70	20	255	40	50	25	10	55	30	75
Future Volume (veh/h)	50	235	70	20	255	40	50	25	10	55	30	75
Initial Q (Qb), veh	0	0	0	0	0	0	0	0	0	0	0	0
Ped-Bike Adj(A_pbT)	1.00		1.00	1.00		1.00	1.00		1.00	1.00		1.00
Parking Bus, Adj	1.00	1.00	1.00	1.00	1.00	1.00	1.00	1.00	1.00	1.00	1.00	1.00
Work Zone On Approach		No			No			No			No	
Adj Sat Flow, veh/h/ln	1870	1870	1870	1856	1856	1856	1870	1870	1870	1885	1885	1885
Adj Flow Rate, veh/h	54	255	76	22	277	43	54	27	11	60	33	82
Peak Hour Factor	0.92	0.92	0.92	0.92	0.92	0.92	0.92	0.92	0.92	0.92	0.92	0.92
Percent Heavy Veh, %	2	2	2	3	3	3	2	2	2	1	1	1
Cap, veh/h	621	500	149	583	670	568	396	103	29	656	92	229
Arrive On Green	0.36	0.36	0.36	0.36	0.36	0.36	0.19	0.19	0.19	0.19	0.19	0.19
Sat Flow, veh/h	1060	1384	412	1041	1856	1572	585	536	152	1381	479	1191
Grp Volume(v), veh/h	54	0	331	22	277	43	92	0	0	60	0	115
Grp Sat Flow(s),veh/h/ln	1060	0	1796	1041	1856	1572	1274	0	0	1381	0	1671
Q Serve(g_s), s	0.8	0.0	2.9	0.3	2.3	0.4	0.4	0.0	0.0	0.0	0.0	1.2
Cycle Q Clear(g_c), s	3.1	0.0	2.9	3.3	2.3	0.4	1.6	0.0	0.0	0.6	0.0	1.2
Prop In Lane	1.00		0.23	1.00		1.00	0.59		0.12	1.00		0.71
Lane Grp Cap(c), veh/h	621	0	649	583	670	568	528	0	0	656	0	321
V/C Ratio(X)	0.09	0.00	0.51	0.04	0.41	0.08	0.17	0.00	0.00	0.09	0.00	0.36
Avail Cap(c_a), veh/h	1578	0	2271	1523	2346	1988	2078	0	0	2136	0	2113
HCM Platoon Ratio	1.00	1.00	1.00	1.00	1.00	1.00	1.00	1.00	1.00	1.00	1.00	1.00
Upstream Filter(I)	1.00	0.00	1.00	1.00	1.00	1.00	1.00	0.00	0.00	1.00	0.00	1.00
Uniform Delay (d), s/veh	6.0	0.0	5.0	6.3	4.8	4.2	7.1	0.0	0.0	6.8	0.0	7.1
Incr Delay (d2), s/veh	0.1	0.0	0.6	0.0	0.4	0.1	0.2	0.0	0.0	0.1	0.0	0.7
Initial Q Delay(d3),s/veh	0.0	0.0	0.0	0.0	0.0	0.0	0.0	0.0	0.0	0.0	0.0	0.0
%ile BackOfQ(95%),veh/ln	0.2	0.0	0.7	0.1	0.4	0.1	0.4	0.0	0.0	0.2	0.0	0.5
Unsig. Movement Delay, s/veh												
LnGrp Delay(d),s/veh	6.0	0.0	5.7	6.3	5.2	4.3	7.3	0.0	0.0	6.9	0.0	7.7
LnGrp LOS	A	A	A	A	A	A	A	A	A	A	A	A
Approach Vol, veh/h		385			342			92			175	
Approach Delay, s/veh		5.7			5.2			7.3			7.4	
Approach LOS		A			A			A			A	

Timer - Assigned Phs	2	4	6	8
Phs Duration (G+Y+Rc), s	8.4	11.8	8.4	11.8
Change Period (Y+Rc), s	4.5	4.5	4.5	4.5
Max Green Setting (Gmax), s	25.5	25.5	25.5	25.5
Max Q Clear Time (g_c+I1), s	3.6	5.1	3.2	5.3
Green Ext Time (p_c), s	0.5	2.2	0.8	1.7

Intersection Summary	
HCM 6th Ctrl Delay	6.0
HCM 6th LOS	A

HCM 6th Signalized Intersection Summary
1: Jackson Dr & WIS-60

05/19/2020

Movement	EBL	EBT	EBR	WBL	WBT	WBR	NBL	NBT	NBR	SBL	SBT	SBR
Lane Configurations												
Traffic Volume (veh/h)	70	335	30	10	340	20	115	50	20	45	25	185
Future Volume (veh/h)	70	335	30	10	340	20	115	50	20	45	25	185
Initial Q (Qb), veh	0	0	0	0	0	0	0	0	0	0	0	0
Ped-Bike Adj(A_pbT)	1.00		1.00	1.00		1.00	1.00		0.97	1.00		0.99
Parking Bus, Adj	1.00	1.00	1.00	1.00	1.00	1.00	1.00	1.00	1.00	1.00	1.00	1.00
Work Zone On Approach		No			No			No			No	
Adj Sat Flow, veh/h/ln	1752	1554	1554	1767	1767	1767	1826	1619	1619	1856	1646	1646
Adj Flow Rate, veh/h	73	349	31	10	354	21	120	52	21	47	26	193
Peak Hour Factor	0.96	0.96	0.96	0.96	0.96	0.96	0.96	0.96	0.96	0.96	0.96	0.96
Percent Heavy Veh, %	10	10	10	9	9	9	5	5	5	3	3	3
Cap, veh/h	501	723	64	69	497	29	294	306	124	447	47	351
Arrive On Green	0.10	0.51	0.51	0.31	0.31	0.31	0.28	0.28	0.28	0.28	0.28	0.28
Sat Flow, veh/h	1668	1406	125	16	1625	95	1131	1087	439	1311	168	1246
Grp Volume(v), veh/h	73	0	380	385	0	0	120	0	73	47	0	219
Grp Sat Flow(s),veh/h/ln	1668	0	1531	1735	0	0	1131	0	1525	1311	0	1413
Q Serve(g_s), s	1.5	0.0	9.3	0.0	0.0	0.0	5.8	0.0	2.1	1.6	0.0	7.6
Cycle Q Clear(g_c), s	1.5	0.0	9.3	11.3	0.0	0.0	13.4	0.0	2.1	3.7	0.0	7.6
Prop In Lane	1.00		0.08	0.03		0.05	1.00		0.29	1.00		0.88
Lane Grp Cap(c), veh/h	501	0	787	595	0	0	294	0	430	447	0	398
V/C Ratio(X)	0.15	0.00	0.48	0.65	0.00	0.00	0.41	0.00	0.17	0.11	0.00	0.55
Avail Cap(c_a), veh/h	1063	0	2026	1404	0	0	661	0	924	871	0	856
HCM Platoon Ratio	1.00	1.00	1.00	1.00	1.00	1.00	1.00	1.00	1.00	1.00	1.00	1.00
Upstream Filter(I)	1.00	0.00	1.00	1.00	0.00	0.00	1.00	0.00	1.00	1.00	0.00	1.00
Uniform Delay (d), s/veh	9.6	0.0	9.1	17.8	0.0	0.0	23.3	0.0	15.7	17.1	0.0	17.6
Incr Delay (d2), s/veh	0.0	0.0	0.7	1.7	0.0	0.0	0.3	0.0	0.1	0.0	0.0	0.4
Initial Q Delay(d3),s/veh	0.0	0.0	0.0	0.0	0.0	0.0	0.0	0.0	0.0	0.0	0.0	0.0
%ile BackOfQ(95%),veh/ln	0.9	0.0	4.9	8.0	0.0	0.0	2.7	0.0	1.2	0.8	0.0	4.2
Unsig. Movement Delay, s/veh												
LnGrp Delay(d),s/veh	9.7	0.0	9.8	19.6	0.0	0.0	23.7	0.0	15.7	17.1	0.0	18.1
LnGrp LOS	A	A	A	B	A	A	C	A	B	B	A	B
Approach Vol, veh/h		453			385			193			266	
Approach Delay, s/veh		9.7			19.6			20.7			17.9	
Approach LOS		A			B			C			B	

Timer - Assigned Phs	1	2		4		6		8				
Phs Duration (G+Y+Rc), s	12.0	23.0		22.8		35.0		22.8				
Change Period (Y+Rc), s	6.5	* 5.3		6.5		* 5.3		6.5				
Max Green Setting (Gmax), s	25.0	* 45		35.0		* 77		35.0				
Max Q Clear Time (g_c+I1), s	3.5	13.3		15.4		11.3		9.6				
Green Ext Time (p_c), s	0.1	4.1		0.4		4.4		0.8				

Intersection Summary												
HCM 6th Ctrl Delay			16.0									
HCM 6th LOS			B									

Notes

* HCM 6th computational engine requires equal clearance times for the phases crossing the barrier.

Intersection	
Int Delay, s/veh	0.2

Movement	EBL	EBT	WBT	WBR	SBL	SBR
Lane Configurations		↑	↑		⋔	
Traffic Vol, veh/h	10	390	370	5	5	0
Future Vol, veh/h	10	390	370	5	5	0
Conflicting Peds, #/hr	0	0	0	0	0	0
Sign Control	Free	Free	Free	Free	Stop	Stop
RT Channelized	-	None	-	None	-	None
Storage Length	-	-	-	-	0	-
Veh in Median Storage, #	-	0	0	-	0	-
Grade, %	-	0	0	-	0	-
Peak Hour Factor	92	92	92	92	92	92
Heavy Vehicles, %	4	4	9	9	2	2
Mvmt Flow	11	424	402	5	5	0

Major/Minor	Major1		Major2		Minor2	
Conflicting Flow All	407	0	-	0	851	405
Stage 1	-	-	-	-	405	-
Stage 2	-	-	-	-	446	-
Critical Hdwy	4.14	-	-	-	6.42	6.22
Critical Hdwy Stg 1	-	-	-	-	5.42	-
Critical Hdwy Stg 2	-	-	-	-	5.42	-
Follow-up Hdwy	2.236	-	-	-	3.518	3.318
Pot Cap-1 Maneuver	1141	-	-	-	330	646
Stage 1	-	-	-	-	673	-
Stage 2	-	-	-	-	645	-
Platoon blocked, %		-	-	-		
Mov Cap-1 Maneuver	1141	-	-	-	326	646
Mov Cap-2 Maneuver	-	-	-	-	326	-
Stage 1	-	-	-	-	664	-
Stage 2	-	-	-	-	645	-

Approach	EB	WB	SB
HCM Control Delay, s	0.2	0	16.2
HCM LOS			C

Minor Lane/Major Mvmt	EBL	EBT	WBT	WBR	SBLn1
Capacity (veh/h)	1141	-	-	-	326
HCM Lane V/C Ratio	0.01	-	-	-	0.017
HCM Control Delay (s)	8.2	-	-	-	16.2
HCM Lane LOS	A	-	-	-	C
HCM 95th %tile Q(veh)	0	-	-	-	0.1

Intersection	
Int Delay, s/veh	2.9

Movement	EBL	EBT	WBT	WBR	SBL	SBR
Lane Configurations						
Traffic Vol, veh/h	10	385	315	15	70	60
Future Vol, veh/h	10	385	315	15	70	60
Conflicting Peds, #/hr	0	0	0	0	0	0
Sign Control	Free	Free	Free	Free	Stop	Stop
RT Channelized	-	None	-	None	-	None
Storage Length	-	-	-	-	0	-
Veh in Median Storage, #	-	0	0	-	0	-
Grade, %	-	0	0	-	0	-
Peak Hour Factor	84	84	84	84	84	84
Heavy Vehicles, %	4	4	6	6	1	1
Mvmt Flow	12	458	375	18	83	71

Major/Minor	Major1		Major2		Minor2	
Conflicting Flow All	393	0	-	0	866	384
Stage 1	-	-	-	-	384	-
Stage 2	-	-	-	-	482	-
Critical Hdwy	4.14	-	-	-	6.41	6.21
Critical Hdwy Stg 1	-	-	-	-	5.41	-
Critical Hdwy Stg 2	-	-	-	-	5.41	-
Follow-up Hdwy	2.236	-	-	-	3.509	3.309
Pot Cap-1 Maneuver	1155	-	-	-	325	666
Stage 1	-	-	-	-	691	-
Stage 2	-	-	-	-	623	-
Platoon blocked, %		-	-	-		
Mov Cap-1 Maneuver	1155	-	-	-	320	666
Mov Cap-2 Maneuver	-	-	-	-	320	-
Stage 1	-	-	-	-	681	-
Stage 2	-	-	-	-	623	-

Approach	EB	WB	SB
HCM Control Delay, s	0.2	0	18.4
HCM LOS			C

Minor Lane/Major Mvmt	EBL	EBT	WBT	WBR	SBLn1
Capacity (veh/h)	1155	-	-	-	421
HCM Lane V/C Ratio	0.01	-	-	-	0.368
HCM Control Delay (s)	8.1	0	-	-	18.4
HCM Lane LOS	A	A	-	-	C
HCM 95th %tile Q(veh)	0	-	-	-	1.7

Intersection	
Int Delay, s/veh	0

Movement	EBL	EBT	WBT	WBR	SBL	SBR
Lane Configurations		↑	↑		⋔	
Traffic Vol, veh/h	0	455	330	0	0	0
Future Vol, veh/h	0	455	330	0	0	0
Conflicting Peds, #/hr	0	0	0	0	0	0
Sign Control	Free	Free	Free	Free	Stop	Stop
RT Channelized	-	None	-	None	-	None
Storage Length	-	-	-	-	0	-
Veh in Median Storage, #	-	0	0	-	0	-
Grade, %	-	0	0	-	0	-
Peak Hour Factor	92	92	92	92	92	92
Heavy Vehicles, %	6	6	6	6	2	2
Mvmt Flow	0	495	359	0	0	0

Major/Minor	Major1		Major2		Minor2	
Conflicting Flow All	-	0	-	0	854	359
Stage 1	-	-	-	-	359	-
Stage 2	-	-	-	-	495	-
Critical Hdwy	-	-	-	-	6.42	6.22
Critical Hdwy Stg 1	-	-	-	-	5.42	-
Critical Hdwy Stg 2	-	-	-	-	5.42	-
Follow-up Hdwy	-	-	-	-	3.518	3.318
Pot Cap-1 Maneuver	0	-	-	0	329	685
Stage 1	0	-	-	0	707	-
Stage 2	0	-	-	0	613	-
Platoon blocked, %		-	-			
Mov Cap-1 Maneuver	-	-	-	-	329	685
Mov Cap-2 Maneuver	-	-	-	-	329	-
Stage 1	-	-	-	-	707	-
Stage 2	-	-	-	-	613	-

Approach	EB	WB	SB
HCM Control Delay, s	0	0	0
HCM LOS			A

Minor Lane/Major Mvmt	EBT	WBT	SBLn1
Capacity (veh/h)	-	-	-
HCM Lane V/C Ratio	-	-	-
HCM Control Delay (s)	-	-	0
HCM Lane LOS	-	-	A
HCM 95th %tile Q(veh)	-	-	-

Intersection	
Int Delay, s/veh	0

Movement	EBT	EBR	WBL	WBT	NBL	NBR
Lane Configurations	↑			↑	⋔	
Traffic Vol, veh/h	455	0	0	330	0	0
Future Vol, veh/h	455	0	0	330	0	0
Conflicting Peds, #/hr	0	0	0	0	0	0
Sign Control	Free	Free	Free	Free	Stop	Stop
RT Channelized	-	None	-	None	-	None
Storage Length	-	-	-	-	0	-
Veh in Median Storage, #	0	-	-	0	0	-
Grade, %	0	-	-	0	0	-
Peak Hour Factor	92	92	92	92	92	92
Heavy Vehicles, %	6	6	6	6	2	2
Mvmt Flow	495	0	0	359	0	0

Major/Minor	Major1		Major2		Minor1	
Conflicting Flow All	0	-	-	-	854	495
Stage 1	-	-	-	-	495	-
Stage 2	-	-	-	-	359	-
Critical Hdwy	-	-	-	-	6.42	6.22
Critical Hdwy Stg 1	-	-	-	-	5.42	-
Critical Hdwy Stg 2	-	-	-	-	5.42	-
Follow-up Hdwy	-	-	-	-	3.518	3.318
Pot Cap-1 Maneuver	-	0	0	-	329	575
Stage 1	-	0	0	-	613	-
Stage 2	-	0	0	-	707	-
Platoon blocked, %	-			-		
Mov Cap-1 Maneuver	-	-	-	-	329	575
Mov Cap-2 Maneuver	-	-	-	-	329	-
Stage 1	-	-	-	-	613	-
Stage 2	-	-	-	-	707	-

Approach	EB	WB	NB
HCM Control Delay, s	0	0	0
HCM LOS			A

Minor Lane/Major Mvmt	NBLn1	EBT	WBT
Capacity (veh/h)	-	-	-
HCM Lane V/C Ratio	-	-	-
HCM Control Delay (s)	0	-	-
HCM Lane LOS	A	-	-
HCM 95th %tile Q(veh)	-	-	-

Movement	EBL	EBT	EBR	WBL	WBT	WBR	NBL	NBT	NBR	SBL	SBT	SBR
Lane Configurations												
Traffic Volume (veh/h)	70	350	35	15	235	90	25	20	25	80	15	70
Future Volume (veh/h)	70	350	35	15	235	90	25	20	25	80	15	70
Initial Q (Qb), veh	0	0	0	0	0	0	0	0	0	0	0	0
Ped-Bike Adj(A_pbT)	1.00		1.00	1.00		1.00	1.00		1.00	1.00		1.00
Parking Bus, Adj	1.00	1.00	1.00	1.00	1.00	1.00	1.00	1.00	1.00	1.00	1.00	1.00
Work Zone On Approach		No			No			No			No	
Adj Sat Flow, veh/h/ln	1811	1811	1811	1841	1841	1841	1796	1796	1796	1811	1811	1811
Adj Flow Rate, veh/h	83	417	42	18	280	107	30	24	30	95	18	83
Peak Hour Factor	0.84	0.84	0.84	0.84	0.84	0.84	0.84	0.84	0.84	0.84	0.84	0.84
Percent Heavy Veh, %	6	6	6	4	4	4	7	7	7	6	6	6
Cap, veh/h	627	695	70	524	791	669	277	103	93	572	51	234
Arrive On Green	0.43	0.43	0.43	0.43	0.43	0.43	0.18	0.18	0.18	0.18	0.18	0.18
Sat Flow, veh/h	964	1618	163	917	1841	1558	362	569	517	1307	281	1297
Grp Volume(v), veh/h	83	0	459	18	280	107	84	0	0	95	0	101
Grp Sat Flow(s),veh/h/ln	964	0	1782	917	1841	1558	1447	0	0	1307	0	1578
Q Serve(g_s), s	1.5	0.0	4.6	0.4	2.4	1.0	0.0	0.0	0.0	0.0	0.0	1.3
Cycle Q Clear(g_c), s	3.8	0.0	4.6	4.9	2.4	1.0	1.3	0.0	0.0	1.1	0.0	1.3
Prop In Lane	1.00		0.09	1.00		1.00	0.36		0.36	1.00		0.82
Lane Grp Cap(c), veh/h	627	0	765	524	791	669	473	0	0	572	0	285
V/C Ratio(X)	0.13	0.00	0.60	0.03	0.35	0.16	0.18	0.00	0.00	0.17	0.00	0.35
Avail Cap(c_a), veh/h	1278	0	1968	1144	2033	1721	1830	0	0	1779	0	1743
HCM Platoon Ratio	1.00	1.00	1.00	1.00	1.00	1.00	1.00	1.00	1.00	1.00	1.00	1.00
Upstream Filter(I)	1.00	0.00	1.00	1.00	1.00	1.00	1.00	0.00	0.00	1.00	0.00	1.00
Uniform Delay (d), s/veh	5.7	0.0	5.1	7.0	4.4	4.0	8.2	0.0	0.0	8.2	0.0	8.3
Incr Delay (d2), s/veh	0.1	0.0	0.8	0.0	0.3	0.1	0.2	0.0	0.0	0.1	0.0	0.7
Initial Q Delay(d3),s/veh	0.0	0.0	0.0	0.0	0.0	0.0	0.0	0.0	0.0	0.0	0.0	0.0
%ile BackOfQ(95%),veh/ln	0.3	0.0	1.1	0.1	0.4	0.1	0.5	0.0	0.0	0.5	0.0	0.6
Unsig. Movement Delay, s/veh												
LnGrp Delay(d),s/veh	5.8	0.0	5.8	7.0	4.7	4.1	8.3	0.0	0.0	8.3	0.0	9.0
LnGrp LOS	A	A	A	A	A	A	A	A	A	A	A	A
Approach Vol, veh/h		542			405			84			196	
Approach Delay, s/veh		5.8			4.7			8.3			8.7	
Approach LOS		A			A			A			A	

Timer - Assigned Phs		2		4		6		8				
Phs Duration (G+Y+Rc), s		8.7		14.4		8.7		14.4				
Change Period (Y+Rc), s		4.5		4.5		4.5		4.5				
Max Green Setting (Gmax), s		25.5		25.5		25.5		25.5				
Max Q Clear Time (g_c+I1), s		3.3		6.6		3.3		6.9				
Green Ext Time (p_c), s		0.4		3.3		0.9		1.9				

Intersection Summary												
HCM 6th Ctrl Delay			6.1									
HCM 6th LOS			A									

HCM 6th Signalized Intersection Summary
1: Jackson Dr & WIS-60

05/19/2020

Movement	EBL	EBT	EBR	WBL	WBT	WBR	NBL	NBT	NBR	SBL	SBT	SBR
Lane Configurations												
Traffic Volume (veh/h)	180	405	125	15	325	50	70	80	15	40	65	105
Future Volume (veh/h)	180	405	125	15	325	50	70	80	15	40	65	105
Initial Q (Qb), veh	0	0	0	0	0	0	0	0	0	0	0	0
Ped-Bike Adj(A_pbT)	1.00		0.98	1.00		0.98	0.99		0.99	0.99		0.97
Parking Bus, Adj	1.00	1.00	1.00	1.00	1.00	1.00	1.00	1.00	1.00	1.00	1.00	1.00
Work Zone On Approach		No			No			No			No	
Adj Sat Flow, veh/h/ln	1856	1646	1646	1841	1841	1841	1856	1646	1646	1885	1672	1672
Adj Flow Rate, veh/h	194	435	134	16	349	54	75	86	16	43	70	113
Peak Hour Factor	0.93	0.93	0.93	0.93	0.93	0.93	0.93	0.93	0.93	0.93	0.93	0.93
Percent Heavy Veh, %	3	3	3	4	4	4	3	3	3	1	1	1
Cap, veh/h	596	683	210	74	487	73	263	304	57	349	127	205
Arrive On Green	0.13	0.57	0.57	0.32	0.32	0.32	0.23	0.23	0.23	0.23	0.23	0.23
Sat Flow, veh/h	1767	1200	370	27	1507	227	1185	1347	251	1294	564	910
Grp Volume(v), veh/h	194	0	569	419	0	0	75	0	102	43	0	183
Grp Sat Flow(s),veh/h/ln	1767	0	1569	1761	0	0	1185	0	1598	1294	0	1474
Q Serve(g_s), s	3.6	0.0	14.1	1.0	0.0	0.0	3.4	0.0	3.0	1.6	0.0	6.3
Cycle Q Clear(g_c), s	3.6	0.0	14.1	11.9	0.0	0.0	9.7	0.0	3.0	4.7	0.0	6.3
Prop In Lane	1.00		0.24	0.04		0.13	1.00		0.16	1.00		0.62
Lane Grp Cap(c), veh/h	596	0	893	634	0	0	263	0	360	349	0	333
V/C Ratio(X)	0.33	0.00	0.64	0.66	0.00	0.00	0.29	0.00	0.28	0.12	0.00	0.55
Avail Cap(c_a), veh/h	1129	0	2088	1422	0	0	716	0	972	844	0	897
HCM Platoon Ratio	1.00	1.00	1.00	1.00	1.00	1.00	1.00	1.00	1.00	1.00	1.00	1.00
Upstream Filter(I)	1.00	0.00	1.00	1.00	0.00	0.00	1.00	0.00	1.00	1.00	0.00	1.00
Uniform Delay (d), s/veh	8.4	0.0	8.4	17.2	0.0	0.0	24.0	0.0	18.4	20.4	0.0	19.7
Incr Delay (d2), s/veh	0.1	0.0	1.1	1.7	0.0	0.0	0.2	0.0	0.2	0.1	0.0	0.5
Initial Q Delay(d3),s/veh	0.0	0.0	0.0	0.0	0.0	0.0	0.0	0.0	0.0	0.0	0.0	0.0
%ile BackOfQ(95%),veh/ln	2.2	0.0	7.3	8.3	0.0	0.0	1.7	0.0	1.9	0.9	0.0	3.7
Unsig. Movement Delay, s/veh												
LnGrp Delay(d),s/veh	8.5	0.0	9.5	18.9	0.0	0.0	24.2	0.0	18.6	20.4	0.0	20.2
LnGrp LOS	A	A	A	B	A	A	C	A	B	C	A	C
Approach Vol, veh/h		763			419			177			226	
Approach Delay, s/veh		9.2			18.9			21.0			20.3	
Approach LOS		A			B			C			C	

Timer - Assigned Phs	1	2		4		6		8
Phs Duration (G+Y+Rc), s	14.1	23.9		19.5		38.0		19.5
Change Period (Y+Rc), s	6.5	* 5.3		6.5		* 5.3		6.5
Max Green Setting (Gmax), s	25.0	* 45		35.0		* 77		35.0
Max Q Clear Time (g_c+I1), s	5.6	13.9		11.7		16.1		8.3
Green Ext Time (p_c), s	0.2	4.6		0.4		7.6		0.6

Intersection Summary	
HCM 6th Ctrl Delay	14.7
HCM 6th LOS	B

Notes

* HCM 6th computational engine requires equal clearance times for the phases crossing the barrier.

Intersection	
Int Delay, s/veh	0.3

Movement	EBL	EBT	WBT	WBR	SBL	SBR
Lane Configurations		↑	↑		⋔	
Traffic Vol, veh/h	5	455	385	0	10	5
Future Vol, veh/h	5	455	385	0	10	5
Conflicting Peds, #/hr	0	0	0	0	0	0
Sign Control	Free	Free	Free	Free	Stop	Stop
RT Channelized	-	None	-	None	-	None
Storage Length	-	-	-	-	0	-
Veh in Median Storage, #	-	0	0	-	0	-
Grade, %	-	0	0	-	0	-
Peak Hour Factor	92	92	92	92	92	92
Heavy Vehicles, %	3	3	4	4	2	2
Mvmt Flow	5	495	418	0	11	5

Major/Minor	Major1		Major2		Minor2	
Conflicting Flow All	418	0	-	0	923	418
Stage 1	-	-	-	-	418	-
Stage 2	-	-	-	-	505	-
Critical Hdwy	4.13	-	-	-	6.42	6.22
Critical Hdwy Stg 1	-	-	-	-	5.42	-
Critical Hdwy Stg 2	-	-	-	-	5.42	-
Follow-up Hdwy	2.227	-	-	-	3.518	3.318
Pot Cap-1 Maneuver	1136	-	-	0	299	635
Stage 1	-	-	-	0	664	-
Stage 2	-	-	-	0	606	-
Platoon blocked, %		-	-			
Mov Cap-1 Maneuver	1136	-	-	-	297	635
Mov Cap-2 Maneuver	-	-	-	-	297	-
Stage 1	-	-	-	-	660	-
Stage 2	-	-	-	-	606	-

Approach	EB	WB	SB
HCM Control Delay, s	0.1	0	15.4
HCM LOS			C

Minor Lane/Major Mvmt	EBL	EBT	WBT	SBLn1
Capacity (veh/h)	1136	-	-	361
HCM Lane V/C Ratio	0.005	-	-	0.045
HCM Control Delay (s)	8.2	-	-	15.4
HCM Lane LOS	A	-	-	C
HCM 95th %tile Q(veh)	0	-	-	0.1

Intersection	
Int Delay, s/veh	1.1

Movement	EBL	EBT	WBT	WBR	SBL	SBR
Lane Configurations						
Traffic Vol, veh/h	50	415	375	45	20	10
Future Vol, veh/h	50	415	375	45	20	10
Conflicting Peds, #/hr	1	0	0	1	0	0
Sign Control	Free	Free	Free	Free	Stop	Stop
RT Channelized	-	None	-	None	-	None
Storage Length	-	-	-	-	0	-
Veh in Median Storage, #	-	0	0	-	0	-
Grade, %	-	0	0	-	0	-
Peak Hour Factor	87	87	87	87	87	87
Heavy Vehicles, %	3	3	4	4	1	1
Mvmt Flow	57	477	431	52	23	11

Major/Minor	Major1		Major2		Minor2	
Conflicting Flow All	484	0	-	0	1049	458
Stage 1	-	-	-	-	458	-
Stage 2	-	-	-	-	591	-
Critical Hdwy	4.13	-	-	-	6.41	6.21
Critical Hdwy Stg 1	-	-	-	-	5.41	-
Critical Hdwy Stg 2	-	-	-	-	5.41	-
Follow-up Hdwy	2.227	-	-	-	3.509	3.309
Pot Cap-1 Maneuver	1074	-	-	-	253	605
Stage 1	-	-	-	-	639	-
Stage 2	-	-	-	-	555	-
Platoon blocked, %		-	-	-		
Mov Cap-1 Maneuver	1073	-	-	-	234	604
Mov Cap-2 Maneuver	-	-	-	-	234	-
Stage 1	-	-	-	-	592	-
Stage 2	-	-	-	-	554	-

Approach	EB	WB	SB
HCM Control Delay, s	0.9	0	18.9
HCM LOS			C

Minor Lane/Major Mvmt	EBL	EBT	WBT	WBR	SBLn1
Capacity (veh/h)	1073	-	-	-	294
HCM Lane V/C Ratio	0.054	-	-	-	0.117
HCM Control Delay (s)	8.5	0	-	-	18.9
HCM Lane LOS	A	A	-	-	C
HCM 95th %tile Q(veh)	0.2	-	-	-	0.4

Intersection	
Int Delay, s/veh	0

Movement	EBL	EBT	WBT	WBR	SBL	SBR
Lane Configurations		↑	↑		⋔	
Traffic Vol, veh/h	0	435	420	0	0	0
Future Vol, veh/h	0	435	420	0	0	0
Conflicting Peds, #/hr	0	0	0	0	0	0
Sign Control	Free	Free	Free	Free	Stop	Stop
RT Channelized	-	None	-	None	-	None
Storage Length	-	-	-	-	0	-
Veh in Median Storage, #	-	0	0	-	0	-
Grade, %	-	0	0	-	0	-
Peak Hour Factor	92	92	92	92	92	92
Heavy Vehicles, %	2	2	4	4	2	2
Mvmt Flow	0	473	457	0	0	0

Major/Minor	Major1		Major2		Minor2	
Conflicting Flow All	-	0	-	0	930	457
Stage 1	-	-	-	-	457	-
Stage 2	-	-	-	-	473	-
Critical Hdwy	-	-	-	-	6.42	6.22
Critical Hdwy Stg 1	-	-	-	-	5.42	-
Critical Hdwy Stg 2	-	-	-	-	5.42	-
Follow-up Hdwy	-	-	-	-	3.518	3.318
Pot Cap-1 Maneuver	0	-	-	0	297	604
Stage 1	0	-	-	0	638	-
Stage 2	0	-	-	0	627	-
Platoon blocked, %		-	-			
Mov Cap-1 Maneuver	-	-	-	-	297	604
Mov Cap-2 Maneuver	-	-	-	-	297	-
Stage 1	-	-	-	-	638	-
Stage 2	-	-	-	-	627	-

Approach	EB	WB	SB
HCM Control Delay, s	0	0	0
HCM LOS			A

Minor Lane/Major Mvmt	EBT	WBT	SBLn1
Capacity (veh/h)	-	-	-
HCM Lane V/C Ratio	-	-	-
HCM Control Delay (s)	-	-	0
HCM Lane LOS	-	-	A
HCM 95th %tile Q(veh)	-	-	-

Intersection	
Int Delay, s/veh	0

Movement	EBT	EBR	WBL	WBT	NBL	NBR
Lane Configurations	↑			↑	⋔	
Traffic Vol, veh/h	435	0	0	420	0	0
Future Vol, veh/h	435	0	0	420	0	0
Conflicting Peds, #/hr	0	0	0	0	0	0
Sign Control	Free	Free	Free	Free	Stop	Stop
RT Channelized	-	None	-	None	-	None
Storage Length	-	-	-	-	0	-
Veh in Median Storage, #	0	-	-	0	0	-
Grade, %	0	-	-	0	0	-
Peak Hour Factor	92	92	92	92	92	92
Heavy Vehicles, %	2	2	4	4	2	2
Mvmt Flow	473	0	0	457	0	0

Major/Minor	Major1		Major2		Minor1	
Conflicting Flow All	0	-	-	-	930	473
Stage 1	-	-	-	-	473	-
Stage 2	-	-	-	-	457	-
Critical Hdwy	-	-	-	-	6.42	6.22
Critical Hdwy Stg 1	-	-	-	-	5.42	-
Critical Hdwy Stg 2	-	-	-	-	5.42	-
Follow-up Hdwy	-	-	-	-	3.518	3.318
Pot Cap-1 Maneuver	-	0	0	-	297	591
Stage 1	-	0	0	-	627	-
Stage 2	-	0	0	-	638	-
Platoon blocked, %	-			-		
Mov Cap-1 Maneuver	-	-	-	-	297	591
Mov Cap-2 Maneuver	-	-	-	-	297	-
Stage 1	-	-	-	-	627	-
Stage 2	-	-	-	-	638	-

Approach	EB	WB	NB
HCM Control Delay, s	0	0	0
HCM LOS			A

Minor Lane/Major Mvmt	NBLn1	EBT	WBT
Capacity (veh/h)	-	-	-
HCM Lane V/C Ratio	-	-	-
HCM Control Delay (s)	0	-	-
HCM Lane LOS	A	-	-
HCM 95th %tile Q(veh)	-	-	-

Movement	EBL	EBT	EBR	WBL	WBT	WBR	NBL	NBT	NBR	SBL	SBT	SBR
Lane Configurations												
Traffic Volume (veh/h)	55	280	100	35	315	80	50	40	20	55	35	55
Future Volume (veh/h)	55	280	100	35	315	80	50	40	20	55	35	55
Initial Q (Qb), veh	0	0	0	0	0	0	0	0	0	0	0	0
Ped-Bike Adj(A_pbT)	1.00		1.00	1.00		0.98	1.00		0.98	1.00		1.00
Parking Bus, Adj	1.00	1.00	1.00	1.00	1.00	1.00	1.00	1.00	1.00	1.00	1.00	1.00
Work Zone On Approach		No			No			No			No	
Adj Sat Flow, veh/h/ln	1870	1870	1870	1870	1870	1870	1885	1885	1885	1885	1885	1885
Adj Flow Rate, veh/h	67	341	122	43	384	98	61	49	24	67	43	67
Peak Hour Factor	0.82	0.82	0.82	0.82	0.82	0.82	0.82	0.82	0.82	0.82	0.82	0.82
Percent Heavy Veh, %	2	2	2	2	2	2	1	1	1	1	1	1
Cap, veh/h	565	569	203	522	809	671	312	118	46	601	124	194
Arrive On Green	0.43	0.43	0.43	0.43	0.43	0.43	0.19	0.19	0.19	0.19	0.19	0.19
Sat Flow, veh/h	913	1315	471	929	1870	1552	482	633	243	1338	664	1035
Grp Volume(v), veh/h	67	0	463	43	384	98	134	0	0	67	0	110
Grp Sat Flow(s),veh/h/ln	913	0	1786	929	1870	1552	1358	0	0	1338	0	1699
Q Serve(g_s), s	1.3	0.0	4.7	0.9	3.5	0.9	1.0	0.0	0.0	0.0	0.0	1.3
Cycle Q Clear(g_c), s	4.8	0.0	4.7	5.6	3.5	0.9	2.4	0.0	0.0	0.7	0.0	1.3
Prop In Lane	1.00		0.26	1.00		1.00	0.46		0.18	1.00		0.61
Lane Grp Cap(c), veh/h	565	0	772	522	809	671	476	0	0	601	0	318
V/C Ratio(X)	0.12	0.00	0.60	0.08	0.47	0.15	0.28	0.00	0.00	0.11	0.00	0.35
Avail Cap(c_a), veh/h	1155	0	1925	1122	2016	1673	1824	0	0	1792	0	1831
HCM Platoon Ratio	1.00	1.00	1.00	1.00	1.00	1.00	1.00	1.00	1.00	1.00	1.00	1.00
Upstream Filter(I)	1.00	0.00	1.00	1.00	1.00	1.00	1.00	0.00	0.00	1.00	0.00	1.00
Uniform Delay (d), s/veh	6.5	0.0	5.1	7.3	4.8	4.1	8.8	0.0	0.0	8.1	0.0	8.4
Incr Delay (d2), s/veh	0.1	0.0	0.8	0.1	0.4	0.1	0.3	0.0	0.0	0.1	0.0	0.6
Initial Q Delay(d3),s/veh	0.0	0.0	0.0	0.0	0.0	0.0	0.0	0.0	0.0	0.0	0.0	0.0
%ile BackOfQ(95%),veh/ln	0.3	0.0	1.2	0.2	0.7	0.2	0.8	0.0	0.0	0.4	0.0	0.7
Unsig. Movement Delay, s/veh												
LnGrp Delay(d),s/veh	6.6	0.0	5.9	7.3	5.2	4.2	9.1	0.0	0.0	8.2	0.0	9.0
LnGrp LOS	A	A	A	A	A	A	A	A	A	A	A	A
Approach Vol, veh/h		530			525			134			177	
Approach Delay, s/veh		6.0			5.2			9.1			8.7	
Approach LOS		A			A			A			A	

Timer - Assigned Phs	2	4	6	8
Phs Duration (G+Y+Rc), s	8.9	14.7	8.9	14.7
Change Period (Y+Rc), s	4.5	4.5	4.5	4.5
Max Green Setting (Gmax), s	25.5	25.5	25.5	25.5
Max Q Clear Time (g_c+I1), s	4.4	6.8	3.3	7.6
Green Ext Time (p_c), s	0.7	3.3	0.8	2.6

Intersection Summary	
HCM 6th Ctrl Delay	6.3
HCM 6th LOS	A

HCM 6th Signalized Intersection Summary
1: Jackson Dr & WIS-60

05/19/2020

Movement	EBL	EBT	EBR	WBL	WBT	WBR	NBL	NBT	NBR	SBL	SBT	SBR
Lane Configurations												
Traffic Volume (veh/h)	65	320	85	15	350	35	95	40	15	25	30	80
Future Volume (veh/h)	65	320	85	15	350	35	95	40	15	25	30	80
Initial Q (Qb), veh	0	0	0	0	0	0	0	0	0	0	0	0
Ped-Bike Adj(A_pbT)	1.00		1.00	1.00		1.00	1.00		1.00	1.00		1.00
Parking Bus, Adj	1.00	1.00	1.00	1.00	1.00	1.00	1.00	1.00	1.00	1.00	1.00	1.00
Work Zone On Approach		No			No			No			No	
Adj Sat Flow, veh/h/ln	1870	1659	1659	1870	1870	1870	1885	1672	1672	1870	1659	1659
Adj Flow Rate, veh/h	66	327	87	15	357	36	97	41	15	26	31	82
Peak Hour Factor	0.98	0.98	0.98	0.98	0.98	0.98	0.98	0.98	0.98	0.98	0.98	0.98
Percent Heavy Veh, %	2	2	2	2	2	2	1	1	1	2	2	2
Cap, veh/h	599	705	187	85	536	53	319	234	86	378	81	213
Arrive On Green	0.10	0.56	0.56	0.33	0.33	0.33	0.20	0.20	0.20	0.20	0.20	0.20
Sat Flow, veh/h	1781	1262	336	26	1630	160	1290	1168	427	1348	402	1065
Grp Volume(v), veh/h	66	0	414	408	0	0	97	0	56	26	0	113
Grp Sat Flow(s),veh/h/ln	1781	0	1597	1817	0	0	1290	0	1595	1348	0	1467
Q Serve(g_s), s	1.0	0.0	7.6	0.0	0.0	0.0	3.4	0.0	1.4	0.8	0.0	3.3
Cycle Q Clear(g_c), s	1.0	0.0	7.6	9.4	0.0	0.0	6.7	0.0	1.4	2.2	0.0	3.3
Prop In Lane	1.00		0.21	0.04		0.09	1.00		0.27	1.00		0.73
Lane Grp Cap(c), veh/h	599	0	892	674	0	0	319	0	320	378	0	294
V/C Ratio(X)	0.11	0.00	0.46	0.61	0.00	0.00	0.30	0.00	0.18	0.07	0.00	0.38
Avail Cap(c_a), veh/h	1336	0	2496	1724	0	0	983	0	1140	1071	0	1049
HCM Platoon Ratio	1.00	1.00	1.00	1.00	1.00	1.00	1.00	1.00	1.00	1.00	1.00	1.00
Upstream Filter(I)	1.00	0.00	1.00	1.00	0.00	0.00	1.00	0.00	1.00	1.00	0.00	1.00
Uniform Delay (d), s/veh	7.2	0.0	6.4	14.2	0.0	0.0	19.9	0.0	16.2	17.1	0.0	17.0
Incr Delay (d2), s/veh	0.0	0.0	0.6	1.3	0.0	0.0	0.2	0.0	0.1	0.0	0.0	0.3
Initial Q Delay(d3),s/veh	0.0	0.0	0.0	0.0	0.0	0.0	0.0	0.0	0.0	0.0	0.0	0.0
%ile BackOfQ(95%),veh/ln	0.6	0.0	3.6	6.5	0.0	0.0	1.8	0.0	0.9	0.4	0.0	1.9
Unsig. Movement Delay, s/veh												
LnGrp Delay(d),s/veh	7.3	0.0	7.0	15.5	0.0	0.0	20.1	0.0	16.3	17.2	0.0	17.3
LnGrp LOS	A	A	A	B	A	A	C	A	B	B	A	B
Approach Vol, veh/h		480			408			153			139	
Approach Delay, s/veh		7.0			15.5			18.7			17.2	
Approach LOS		A			B			B			B	

Timer - Assigned Phs	1	2		4		6		8
Phs Duration (G+Y+Rc), s	11.2	21.4		16.3		32.7		16.3
Change Period (Y+Rc), s	6.5	* 5.3		6.5		* 5.3		6.5
Max Green Setting (Gmax), s	25.0	* 45		35.0		* 77		35.0
Max Q Clear Time (g_c+I1), s	3.0	11.4		8.7		9.6		5.3
Green Ext Time (p_c), s	0.0	4.5		0.2		4.9		0.4

Intersection Summary	
HCM 6th Ctrl Delay	12.7
HCM 6th LOS	B

Notes

* HCM 6th computational engine requires equal clearance times for the phases crossing the barrier.

Intersection	
Int Delay, s/veh	0

Movement	EBL	EBT	WBT	WBR	SBL	SBR
Lane Configurations		↑	↑		⋔	
Traffic Vol, veh/h	0	360	400	0	0	0
Future Vol, veh/h	0	360	400	0	0	0
Conflicting Peds, #/hr	0	0	0	0	0	0
Sign Control	Free	Free	Free	Free	Stop	Stop
RT Channelized	-	None	-	None	-	None
Storage Length	-	-	-	-	0	-
Veh in Median Storage, #	-	0	0	-	0	-
Grade, %	-	0	0	-	0	-
Peak Hour Factor	92	92	92	92	92	92
Heavy Vehicles, %	3	3	2	2	2	2
Mvmt Flow	0	391	435	0	0	0

Major/Minor	Major1		Major2		Minor2	
Conflicting Flow All	-	0	-	0	826	435
Stage 1	-	-	-	-	435	-
Stage 2	-	-	-	-	391	-
Critical Hdwy	-	-	-	-	6.42	6.22
Critical Hdwy Stg 1	-	-	-	-	5.42	-
Critical Hdwy Stg 2	-	-	-	-	5.42	-
Follow-up Hdwy	-	-	-	-	3.518	3.318
Pot Cap-1 Maneuver	0	-	-	0	342	621
Stage 1	0	-	-	0	653	-
Stage 2	0	-	-	0	683	-
Platoon blocked, %		-	-			
Mov Cap-1 Maneuver	-	-	-	-	342	621
Mov Cap-2 Maneuver	-	-	-	-	342	-
Stage 1	-	-	-	-	653	-
Stage 2	-	-	-	-	683	-

Approach	EB	WB	SB
HCM Control Delay, s	0	0	0
HCM LOS			A

Minor Lane/Major Mvmt	EBT	WBT	SBLn1
Capacity (veh/h)	-	-	-
HCM Lane V/C Ratio	-	-	-
HCM Control Delay (s)	-	-	0
HCM Lane LOS	-	-	A
HCM 95th %tile Q(veh)	-	-	-

Intersection	
Int Delay, s/veh	1.1

Movement	EBL	EBT	WBT	WBR	SBL	SBR
Lane Configurations						
Traffic Vol, veh/h	20	340	365	20	20	35
Future Vol, veh/h	20	340	365	20	20	35
Conflicting Peds, #/hr	1	0	0	1	0	0
Sign Control	Free	Free	Free	Free	Stop	Stop
RT Channelized	-	None	-	None	-	None
Storage Length	-	-	-	-	0	-
Veh in Median Storage, #	-	0	0	-	0	-
Grade, %	-	0	0	-	0	-
Peak Hour Factor	94	94	94	94	94	94
Heavy Vehicles, %	3	3	3	3	2	2
Mvmt Flow	21	362	388	21	21	37

Major/Minor	Major1		Major2		Minor2	
Conflicting Flow All	410	0	-	0	804	400
Stage 1	-	-	-	-	400	-
Stage 2	-	-	-	-	404	-
Critical Hdwy	4.13	-	-	-	6.42	6.22
Critical Hdwy Stg 1	-	-	-	-	5.42	-
Critical Hdwy Stg 2	-	-	-	-	5.42	-
Follow-up Hdwy	2.227	-	-	-	3.518	3.318
Pot Cap-1 Maneuver	1143	-	-	-	352	650
Stage 1	-	-	-	-	677	-
Stage 2	-	-	-	-	674	-
Platoon blocked, %		-	-	-		
Mov Cap-1 Maneuver	1142	-	-	-	343	649
Mov Cap-2 Maneuver	-	-	-	-	343	-
Stage 1	-	-	-	-	661	-
Stage 2	-	-	-	-	673	-

Approach	EB	WB	SB
HCM Control Delay, s	0.5	0	13.3
HCM LOS			B

Minor Lane/Major Mvmt	EBL	EBT	WBT	WBR	SBLn1
Capacity (veh/h)	1142	-	-	-	490
HCM Lane V/C Ratio	0.019	-	-	-	0.119
HCM Control Delay (s)	8.2	0	-	-	13.3
HCM Lane LOS	A	A	-	-	B
HCM 95th %tile Q(veh)	0.1	-	-	-	0.4

Intersection	
Int Delay, s/veh	0

Movement	EBL	EBT	WBT	WBR	SBL	SBR
Lane Configurations		↑	↑		⋔	
Traffic Vol, veh/h	0	360	385	0	0	0
Future Vol, veh/h	0	360	385	0	0	0
Conflicting Peds, #/hr	0	0	0	0	0	0
Sign Control	Free	Free	Free	Free	Stop	Stop
RT Channelized	-	None	-	None	-	None
Storage Length	-	-	-	-	0	-
Veh in Median Storage, #	-	0	0	-	0	-
Grade, %	-	0	0	-	0	-
Peak Hour Factor	92	92	92	92	92	92
Heavy Vehicles, %	2	2	3	3	2	2
Mvmt Flow	0	391	418	0	0	0

Major/Minor	Major1		Major2		Minor2	
Conflicting Flow All	-	0	-	0	809	418
Stage 1	-	-	-	-	418	-
Stage 2	-	-	-	-	391	-
Critical Hdwy	-	-	-	-	6.42	6.22
Critical Hdwy Stg 1	-	-	-	-	5.42	-
Critical Hdwy Stg 2	-	-	-	-	5.42	-
Follow-up Hdwy	-	-	-	-	3.518	3.318
Pot Cap-1 Maneuver	0	-	-	0	350	635
Stage 1	0	-	-	0	664	-
Stage 2	0	-	-	0	683	-
Platoon blocked, %		-	-			
Mov Cap-1 Maneuver	-	-	-	-	350	635
Mov Cap-2 Maneuver	-	-	-	-	350	-
Stage 1	-	-	-	-	664	-
Stage 2	-	-	-	-	683	-

Approach	EB	WB	SB
HCM Control Delay, s	0	0	0
HCM LOS			A

Minor Lane/Major Mvmt	EBT	WBT	SBLn1
Capacity (veh/h)	-	-	-
HCM Lane V/C Ratio	-	-	-
HCM Control Delay (s)	-	-	0
HCM Lane LOS	-	-	A
HCM 95th %tile Q(veh)	-	-	-

Intersection	
Int Delay, s/veh	0

Movement	EBT	EBR	WBL	WBT	NBL	NBR
Lane Configurations	↑			↑	⋔	
Traffic Vol, veh/h	360	0	0	385	0	0
Future Vol, veh/h	360	0	0	385	0	0
Conflicting Peds, #/hr	0	0	0	0	0	0
Sign Control	Free	Free	Free	Free	Stop	Stop
RT Channelized	-	None	-	None	-	None
Storage Length	-	-	-	-	0	-
Veh in Median Storage, #	0	-	-	0	0	-
Grade, %	0	-	-	0	0	-
Peak Hour Factor	92	92	92	92	92	92
Heavy Vehicles, %	2	2	3	3	2	2
Mvmt Flow	391	0	0	418	0	0

Major/Minor	Major1		Major2		Minor1	
Conflicting Flow All	0	-	-	-	809	391
Stage 1	-	-	-	-	391	-
Stage 2	-	-	-	-	418	-
Critical Hdwy	-	-	-	-	6.42	6.22
Critical Hdwy Stg 1	-	-	-	-	5.42	-
Critical Hdwy Stg 2	-	-	-	-	5.42	-
Follow-up Hdwy	-	-	-	-	3.518	3.318
Pot Cap-1 Maneuver	-	0	0	-	350	658
Stage 1	-	0	0	-	683	-
Stage 2	-	0	0	-	664	-
Platoon blocked, %	-			-		
Mov Cap-1 Maneuver	-	-	-	-	350	658
Mov Cap-2 Maneuver	-	-	-	-	350	-
Stage 1	-	-	-	-	683	-
Stage 2	-	-	-	-	664	-

Approach	EB	WB	NB
HCM Control Delay, s	0	0	0
HCM LOS			A

Minor Lane/Major Mvmt	NBLn1	EBT	WBT
Capacity (veh/h)	-	-	-
HCM Lane V/C Ratio	-	-	-
HCM Control Delay (s)	0	-	-
HCM Lane LOS	A	-	-
HCM 95th %tile Q(veh)	-	-	-

Movement	EBL	EBT	EBR	WBL	WBT	WBR	NBL	NBT	NBR	SBL	SBT	SBR
Lane Configurations												
Traffic Volume (veh/h)	50	240	70	20	260	40	50	25	10	55	30	75
Future Volume (veh/h)	50	240	70	20	260	40	50	25	10	55	30	75
Initial Q (Qb), veh	0	0	0	0	0	0	0	0	0	0	0	0
Ped-Bike Adj(A_pbT)	1.00		1.00	1.00		1.00	1.00		1.00	1.00		1.00
Parking Bus, Adj	1.00	1.00	1.00	1.00	1.00	1.00	1.00	1.00	1.00	1.00	1.00	1.00
Work Zone On Approach		No			No			No			No	
Adj Sat Flow, veh/h/ln	1870	1870	1870	1856	1856	1856	1870	1870	1870	1885	1885	1885
Adj Flow Rate, veh/h	54	261	76	22	283	43	54	27	11	60	33	82
Peak Hour Factor	0.92	0.92	0.92	0.92	0.92	0.92	0.92	0.92	0.92	0.92	0.92	0.92
Percent Heavy Veh, %	2	2	2	3	3	3	2	2	2	1	1	1
Cap, veh/h	619	508	148	581	677	573	394	103	29	653	92	228
Arrive On Green	0.36	0.36	0.36	0.36	0.36	0.36	0.19	0.19	0.19	0.19	0.19	0.19
Sat Flow, veh/h	1054	1392	405	1035	1856	1572	584	536	152	1381	479	1191
Grp Volume(v), veh/h	54	0	337	22	283	43	92	0	0	60	0	115
Grp Sat Flow(s),veh/h/ln	1054	0	1797	1035	1856	1572	1272	0	0	1381	0	1671
Q Serve(g_s), s	0.8	0.0	3.0	0.3	2.3	0.4	0.4	0.0	0.0	0.0	0.0	1.2
Cycle Q Clear(g_c), s	3.1	0.0	3.0	3.3	2.3	0.4	1.6	0.0	0.0	0.6	0.0	1.2
Prop In Lane	1.00		0.23	1.00		1.00	0.59		0.12	1.00		0.71
Lane Grp Cap(c), veh/h	619	0	655	581	677	573	526	0	0	653	0	320
V/C Ratio(X)	0.09	0.00	0.51	0.04	0.42	0.08	0.18	0.00	0.00	0.09	0.00	0.36
Avail Cap(c_a), veh/h	1559	0	2259	1504	2333	1977	2065	0	0	2123	0	2100
HCM Platoon Ratio	1.00	1.00	1.00	1.00	1.00	1.00	1.00	1.00	1.00	1.00	1.00	1.00
Upstream Filter(I)	1.00	0.00	1.00	1.00	1.00	1.00	1.00	0.00	0.00	1.00	0.00	1.00
Uniform Delay (d), s/veh	6.0	0.0	5.0	6.3	4.8	4.2	7.2	0.0	0.0	6.9	0.0	7.1
Incr Delay (d2), s/veh	0.1	0.0	0.6	0.0	0.4	0.1	0.2	0.0	0.0	0.1	0.0	0.7
Initial Q Delay(d3),s/veh	0.0	0.0	0.0	0.0	0.0	0.0	0.0	0.0	0.0	0.0	0.0	0.0
%ile BackOfQ(95%),veh/ln	0.2	0.0	0.7	0.1	0.4	0.1	0.4	0.0	0.0	0.2	0.0	0.5
Unsig. Movement Delay, s/veh												
LnGrp Delay(d),s/veh	6.1	0.0	5.7	6.4	5.2	4.3	7.3	0.0	0.0	6.9	0.0	7.8
LnGrp LOS	A	A	A	A	A	A	A	A	A	A	A	A
Approach Vol, veh/h		391			348			92			175	
Approach Delay, s/veh		5.7			5.2			7.3			7.5	
Approach LOS		A			A			A			A	

Timer - Assigned Phs	2	4	6	8
Phs Duration (G+Y+Rc), s	8.4	11.9	8.4	11.9
Change Period (Y+Rc), s	4.5	4.5	4.5	4.5
Max Green Setting (Gmax), s	25.5	25.5	25.5	25.5
Max Q Clear Time (g_c+I1), s	3.6	5.1	3.2	5.3
Green Ext Time (p_c), s	0.5	2.3	0.8	1.7

Intersection Summary	
HCM 6th Ctrl Delay	6.0
HCM 6th LOS	A

Notes

User approved pedestrian interval to be less than phase max green.

HCM 6th Signalized Intersection Summary
1: Jackson Dr & WIS-60

05/19/2020

Movement	EBL	EBT	EBR	WBL	WBT	WBR	NBL	NBT	NBR	SBL	SBT	SBR
Lane Configurations												
Traffic Volume (veh/h)	70	335	30	10	340	20	115	55	20	45	25	185
Future Volume (veh/h)	70	335	30	10	340	20	115	55	20	45	25	185
Initial Q (Qb), veh	0	0	0	0	0	0	0	0	0	0	0	0
Ped-Bike Adj(A_pbT)	1.00		1.00	1.00		1.00	1.00		0.97	1.00		0.99
Parking Bus, Adj	1.00	1.00	1.00	1.00	1.00	1.00	1.00	1.00	1.00	1.00	1.00	1.00
Work Zone On Approach		No			No			No			No	
Adj Sat Flow, veh/h/ln	1752	1554	1554	1767	1767	1767	1826	1619	1619	1856	1646	1646
Adj Flow Rate, veh/h	73	349	31	10	354	21	120	57	21	47	26	193
Peak Hour Factor	0.96	0.96	0.96	0.96	0.96	0.96	0.96	0.96	0.96	0.96	0.96	0.96
Percent Heavy Veh, %	10	10	10	9	9	9	5	5	5	3	3	3
Cap, veh/h	500	723	64	69	497	29	295	315	116	442	47	351
Arrive On Green	0.10	0.51	0.51	0.31	0.31	0.31	0.28	0.28	0.28	0.28	0.28	0.28
Sat Flow, veh/h	1668	1406	125	16	1625	95	1131	1119	412	1305	168	1246
Grp Volume(v), veh/h	73	0	380	385	0	0	120	0	78	47	0	219
Grp Sat Flow(s),veh/h/ln	1668	0	1531	1735	0	0	1131	0	1531	1305	0	1413
Q Serve(g_s), s	1.5	0.0	9.3	0.0	0.0	0.0	5.8	0.0	2.2	1.6	0.0	7.6
Cycle Q Clear(g_c), s	1.5	0.0	9.3	11.3	0.0	0.0	13.4	0.0	2.2	3.9	0.0	7.6
Prop In Lane	1.00		0.08	0.03		0.05	1.00		0.27	1.00		0.88
Lane Grp Cap(c), veh/h	500	0	787	595	0	0	295	0	432	442	0	399
V/C Ratio(X)	0.15	0.00	0.48	0.65	0.00	0.00	0.41	0.00	0.18	0.11	0.00	0.55
Avail Cap(c_a), veh/h	1063	0	2026	1403	0	0	660	0	927	864	0	856
HCM Platoon Ratio	1.00	1.00	1.00	1.00	1.00	1.00	1.00	1.00	1.00	1.00	1.00	1.00
Upstream Filter(I)	1.00	0.00	1.00	1.00	0.00	0.00	1.00	0.00	1.00	1.00	0.00	1.00
Uniform Delay (d), s/veh	9.6	0.0	9.1	17.9	0.0	0.0	23.3	0.0	15.7	17.2	0.0	17.6
Incr Delay (d2), s/veh	0.0	0.0	0.7	1.8	0.0	0.0	0.3	0.0	0.1	0.0	0.0	0.4
Initial Q Delay(d3),s/veh	0.0	0.0	0.0	0.0	0.0	0.0	0.0	0.0	0.0	0.0	0.0	0.0
%ile BackOfQ(95%),veh/ln	0.9	0.0	4.9	8.0	0.0	0.0	2.7	0.0	1.3	0.8	0.0	4.2
Unsig. Movement Delay, s/veh												
LnGrp Delay(d),s/veh	9.7	0.0	9.8	19.6	0.0	0.0	23.7	0.0	15.8	17.2	0.0	18.1
LnGrp LOS	A	A	A	B	A	A	C	A	B	B	A	B
Approach Vol, veh/h		453			385			198			266	
Approach Delay, s/veh		9.7			19.6			20.6			17.9	
Approach LOS		A			B			C			B	

Timer - Assigned Phs	1	2		4		6		8				
Phs Duration (G+Y+Rc), s	12.0	23.0		22.8		35.0		22.8				
Change Period (Y+Rc), s	6.5	* 5.3		6.5		* 5.3		6.5				
Max Green Setting (Gmax), s	25.0	* 45		35.0		* 77		35.0				
Max Q Clear Time (g_c+I1), s	3.5	13.3		15.4		11.3		9.6				
Green Ext Time (p_c), s	0.1	4.1		0.4		4.4		0.8				

Intersection Summary												
HCM 6th Ctrl Delay			16.0									
HCM 6th LOS			B									

Notes

* HCM 6th computational engine requires equal clearance times for the phases crossing the barrier.

Intersection	
Int Delay, s/veh	0.2

Movement	EBL	EBT	WBT	WBR	SBL	SBR
Lane Configurations		↑	↑		⋔	
Traffic Vol, veh/h	10	390	370	5	5	0
Future Vol, veh/h	10	390	370	5	5	0
Conflicting Peds, #/hr	0	0	0	0	0	0
Sign Control	Free	Free	Free	Free	Stop	Stop
RT Channelized	-	None	-	None	-	None
Storage Length	-	-	-	-	0	-
Veh in Median Storage, #	-	0	0	-	0	-
Grade, %	-	0	0	-	0	-
Peak Hour Factor	92	92	92	92	92	92
Heavy Vehicles, %	4	4	9	9	2	2
Mvmt Flow	11	424	402	5	5	0

Major/Minor	Major1		Major2		Minor2	
Conflicting Flow All	407	0	-	0	851	405
Stage 1	-	-	-	-	405	-
Stage 2	-	-	-	-	446	-
Critical Hdwy	4.14	-	-	-	6.42	6.22
Critical Hdwy Stg 1	-	-	-	-	5.42	-
Critical Hdwy Stg 2	-	-	-	-	5.42	-
Follow-up Hdwy	2.236	-	-	-	3.518	3.318
Pot Cap-1 Maneuver	1141	-	-	-	330	646
Stage 1	-	-	-	-	673	-
Stage 2	-	-	-	-	645	-
Platoon blocked, %		-	-	-		
Mov Cap-1 Maneuver	1141	-	-	-	326	646
Mov Cap-2 Maneuver	-	-	-	-	326	-
Stage 1	-	-	-	-	664	-
Stage 2	-	-	-	-	645	-

Approach	EB	WB	SB
HCM Control Delay, s	0.2	0	16.2
HCM LOS			C

Minor Lane/Major Mvmt	EBL	EBT	WBT	WBR	SBLn1
Capacity (veh/h)	1141	-	-	-	326
HCM Lane V/C Ratio	0.01	-	-	-	0.017
HCM Control Delay (s)	8.2	-	-	-	16.2
HCM Lane LOS	A	-	-	-	C
HCM 95th %tile Q(veh)	0	-	-	-	0.1

Intersection	
Int Delay, s/veh	3.1

Movement	EBL	EBT	WBT	WBR	SBL	SBR
Lane Configurations						
Traffic Vol, veh/h	10	385	315	15	75	60
Future Vol, veh/h	10	385	315	15	75	60
Conflicting Peds, #/hr	0	0	0	0	0	0
Sign Control	Free	Free	Free	Free	Stop	Stop
RT Channelized	-	None	-	None	-	None
Storage Length	-	-	-	-	0	-
Veh in Median Storage, #	-	0	0	-	0	-
Grade, %	-	0	0	-	0	-
Peak Hour Factor	84	84	84	84	84	84
Heavy Vehicles, %	4	4	6	6	1	1
Mvmt Flow	12	458	375	18	89	71

Major/Minor	Major1		Major2		Minor2	
Conflicting Flow All	393	0	-	0	866	384
Stage 1	-	-	-	-	384	-
Stage 2	-	-	-	-	482	-
Critical Hdwy	4.14	-	-	-	6.41	6.21
Critical Hdwy Stg 1	-	-	-	-	5.41	-
Critical Hdwy Stg 2	-	-	-	-	5.41	-
Follow-up Hdwy	2.236	-	-	-	3.509	3.309
Pot Cap-1 Maneuver	1155	-	-	-	325	666
Stage 1	-	-	-	-	691	-
Stage 2	-	-	-	-	623	-
Platoon blocked, %		-	-	-		
Mov Cap-1 Maneuver	1155	-	-	-	320	666
Mov Cap-2 Maneuver	-	-	-	-	320	-
Stage 1	-	-	-	-	681	-
Stage 2	-	-	-	-	623	-

Approach	EB	WB	SB
HCM Control Delay, s	0.2	0	19
HCM LOS			C

Minor Lane/Major Mvmt	EBL	EBT	WBT	WBR	SBLn1
Capacity (veh/h)	1155	-	-	-	416
HCM Lane V/C Ratio	0.01	-	-	-	0.386
HCM Control Delay (s)	8.1	0	-	-	19
HCM Lane LOS	A	A	-	-	C
HCM 95th %tile Q(veh)	0	-	-	-	1.8

Intersection	
Int Delay, s/veh	0

Movement	EBL	EBT	WBT	WBR	SBL	SBR
Lane Configurations		↑	↑		⋔	
Traffic Vol, veh/h	0	460	330	0	0	0
Future Vol, veh/h	0	460	330	0	0	0
Conflicting Peds, #/hr	0	0	0	0	0	0
Sign Control	Free	Free	Free	Free	Stop	Stop
RT Channelized	-	None	-	None	-	None
Storage Length	-	-	-	-	0	-
Veh in Median Storage, #	-	0	0	-	0	-
Grade, %	-	0	0	-	0	-
Peak Hour Factor	92	92	92	92	92	92
Heavy Vehicles, %	6	6	6	6	2	2
Mvmt Flow	0	500	359	0	0	0

Major/Minor	Major1		Major2		Minor2	
Conflicting Flow All	-	0	-	0	859	359
Stage 1	-	-	-	-	359	-
Stage 2	-	-	-	-	500	-
Critical Hdwy	-	-	-	-	6.42	6.22
Critical Hdwy Stg 1	-	-	-	-	5.42	-
Critical Hdwy Stg 2	-	-	-	-	5.42	-
Follow-up Hdwy	-	-	-	-	3.518	3.318
Pot Cap-1 Maneuver	0	-	-	0	327	685
Stage 1	0	-	-	0	707	-
Stage 2	0	-	-	0	609	-
Platoon blocked, %		-	-			
Mov Cap-1 Maneuver	-	-	-	-	327	685
Mov Cap-2 Maneuver	-	-	-	-	327	-
Stage 1	-	-	-	-	707	-
Stage 2	-	-	-	-	609	-

Approach	EB	WB	SB
HCM Control Delay, s	0	0	0
HCM LOS			A

Minor Lane/Major Mvmt	EBT	WBT	SBLn1
Capacity (veh/h)	-	-	-
HCM Lane V/C Ratio	-	-	-
HCM Control Delay (s)	-	-	0
HCM Lane LOS	-	-	A
HCM 95th %tile Q(veh)	-	-	-

Intersection	
Int Delay, s/veh	0

Movement	EBT	EBR	WBL	WBT	NBL	NBR
Lane Configurations	↑			↑	⋔	
Traffic Vol, veh/h	460	0	0	330	0	0
Future Vol, veh/h	460	0	0	330	0	0
Conflicting Peds, #/hr	0	0	0	0	0	0
Sign Control	Free	Free	Free	Free	Stop	Stop
RT Channelized	-	None	-	None	-	None
Storage Length	-	-	-	-	0	-
Veh in Median Storage, #	0	-	-	0	0	-
Grade, %	0	-	-	0	0	-
Peak Hour Factor	92	92	92	92	92	92
Heavy Vehicles, %	6	6	6	6	2	2
Mvmt Flow	500	0	0	359	0	0

Major/Minor	Major1		Major2		Minor1	
Conflicting Flow All	0	-	-	-	859	500
Stage 1	-	-	-	-	500	-
Stage 2	-	-	-	-	359	-
Critical Hdwy	-	-	-	-	6.42	6.22
Critical Hdwy Stg 1	-	-	-	-	5.42	-
Critical Hdwy Stg 2	-	-	-	-	5.42	-
Follow-up Hdwy	-	-	-	-	3.518	3.318
Pot Cap-1 Maneuver	-	0	0	-	327	571
Stage 1	-	0	0	-	609	-
Stage 2	-	0	0	-	707	-
Platoon blocked, %	-			-		
Mov Cap-1 Maneuver	-	-	-	-	327	571
Mov Cap-2 Maneuver	-	-	-	-	327	-
Stage 1	-	-	-	-	609	-
Stage 2	-	-	-	-	707	-

Approach	EB	WB	NB
HCM Control Delay, s	0	0	0
HCM LOS			A

Minor Lane/Major Mvmt	NBLn1	EBT	WBT
Capacity (veh/h)	-	-	-
HCM Lane V/C Ratio	-	-	-
HCM Control Delay (s)	0	-	-
HCM Lane LOS	A	-	-
HCM 95th %tile Q(veh)	-	-	-

Movement	EBL	EBT	EBR	WBL	WBT	WBR	NBL	NBT	NBR	SBL	SBT	SBR
Lane Configurations												
Traffic Volume (veh/h)	75	350	35	15	235	90	25	20	25	80	15	70
Future Volume (veh/h)	75	350	35	15	235	90	25	20	25	80	15	70
Initial Q (Qb), veh	0	0	0	0	0	0	0	0	0	0	0	0
Ped-Bike Adj(A_pbT)	1.00		1.00	1.00		1.00	1.00		1.00	1.00		1.00
Parking Bus, Adj	1.00	1.00	1.00	1.00	1.00	1.00	1.00	1.00	1.00	1.00	1.00	1.00
Work Zone On Approach		No			No			No			No	
Adj Sat Flow, veh/h/ln	1811	1811	1811	1841	1841	1841	1796	1796	1796	1811	1811	1811
Adj Flow Rate, veh/h	89	417	42	18	280	107	30	24	30	95	18	83
Peak Hour Factor	0.84	0.84	0.84	0.84	0.84	0.84	0.84	0.84	0.84	0.84	0.84	0.84
Percent Heavy Veh, %	6	6	6	4	4	4	7	7	7	6	6	6
Cap, veh/h	628	696	70	525	792	670	277	103	93	571	51	234
Arrive On Green	0.43	0.43	0.43	0.43	0.43	0.43	0.18	0.18	0.18	0.18	0.18	0.18
Sat Flow, veh/h	964	1618	163	917	1841	1558	361	569	517	1307	281	1297
Grp Volume(v), veh/h	89	0	459	18	280	107	84	0	0	95	0	101
Grp Sat Flow(s),veh/h/ln	964	0	1782	917	1841	1558	1447	0	0	1307	0	1578
Q Serve(g_s), s	1.6	0.0	4.6	0.4	2.4	1.0	0.0	0.0	0.0	0.0	0.0	1.3
Cycle Q Clear(g_c), s	3.9	0.0	4.6	4.9	2.4	1.0	1.3	0.0	0.0	1.1	0.0	1.3
Prop In Lane	1.00		0.09	1.00		1.00	0.36		0.36	1.00		0.82
Lane Grp Cap(c), veh/h	628	0	767	525	792	670	472	0	0	571	0	285
V/C Ratio(X)	0.14	0.00	0.60	0.03	0.35	0.16	0.18	0.00	0.00	0.17	0.00	0.35
Avail Cap(c_a), veh/h	1276	0	1965	1142	2030	1718	1827	0	0	1777	0	1740
HCM Platoon Ratio	1.00	1.00	1.00	1.00	1.00	1.00	1.00	1.00	1.00	1.00	1.00	1.00
Upstream Filter(I)	1.00	0.00	1.00	1.00	1.00	1.00	1.00	0.00	0.00	1.00	0.00	1.00
Uniform Delay (d), s/veh	5.7	0.0	5.1	6.9	4.4	4.0	8.2	0.0	0.0	8.2	0.0	8.3
Incr Delay (d2), s/veh	0.1	0.0	0.8	0.0	0.3	0.1	0.2	0.0	0.0	0.1	0.0	0.7
Initial Q Delay(d3),s/veh	0.0	0.0	0.0	0.0	0.0	0.0	0.0	0.0	0.0	0.0	0.0	0.0
%ile BackOfQ(95%),veh/ln	0.3	0.0	1.1	0.1	0.4	0.1	0.5	0.0	0.0	0.5	0.0	0.6
Unsig. Movement Delay, s/veh												
LnGrp Delay(d),s/veh	5.9	0.0	5.8	7.0	4.7	4.1	8.4	0.0	0.0	8.4	0.0	9.0
LnGrp LOS	A	A	A	A	A	A	A	A	A	A	A	A
Approach Vol, veh/h		548			405			84			196	
Approach Delay, s/veh		5.8			4.6			8.4			8.7	
Approach LOS		A			A			A			A	

Timer - Assigned Phs		2		4		6		8				
Phs Duration (G+Y+Rc), s		8.7		14.4		8.7		14.4				
Change Period (Y+Rc), s		4.5		4.5		4.5		4.5				
Max Green Setting (Gmax), s		25.5		25.5		25.5		25.5				
Max Q Clear Time (g_c+I1), s		3.3		6.6		3.3		6.9				
Green Ext Time (p_c), s		0.4		3.3		0.9		1.9				

Intersection Summary												
HCM 6th Ctrl Delay			6.1									
HCM 6th LOS			A									

HCM 6th Signalized Intersection Summary
1: Jackson Dr & WIS-60

05/19/2020

Movement	EBL	EBT	EBR	WBL	WBT	WBR	NBL	NBT	NBR	SBL	SBT	SBR
Lane Configurations												
Traffic Volume (veh/h)	180	410	125	15	325	50	75	80	15	40	65	105
Future Volume (veh/h)	180	410	125	15	325	50	75	80	15	40	65	105
Initial Q (Qb), veh	0	0	0	0	0	0	0	0	0	0	0	0
Ped-Bike Adj(A_pbT)	1.00		0.98	1.00		0.98	0.99		0.99	0.99		0.97
Parking Bus, Adj	1.00	1.00	1.00	1.00	1.00	1.00	1.00	1.00	1.00	1.00	1.00	1.00
Work Zone On Approach		No			No			No			No	
Adj Sat Flow, veh/h/ln	1856	1646	1646	1841	1841	1841	1856	1646	1646	1885	1672	1672
Adj Flow Rate, veh/h	194	441	134	16	349	54	81	86	16	43	70	113
Peak Hour Factor	0.93	0.93	0.93	0.93	0.93	0.93	0.93	0.93	0.93	0.93	0.93	0.93
Percent Heavy Veh, %	3	3	3	4	4	4	3	3	3	1	1	1
Cap, veh/h	591	683	207	73	486	73	267	309	57	353	129	209
Arrive On Green	0.13	0.57	0.57	0.32	0.32	0.32	0.23	0.23	0.23	0.23	0.23	0.23
Sat Flow, veh/h	1767	1204	366	27	1506	227	1185	1347	251	1294	564	911
Grp Volume(v), veh/h	194	0	575	419	0	0	81	0	102	43	0	183
Grp Sat Flow(s),veh/h/ln	1767	0	1570	1760	0	0	1185	0	1598	1294	0	1475
Q Serve(g_s), s	3.6	0.0	14.5	1.1	0.0	0.0	3.7	0.0	3.0	1.6	0.0	6.3
Cycle Q Clear(g_c), s	3.6	0.0	14.5	12.0	0.0	0.0	10.1	0.0	3.0	4.7	0.0	6.3
Prop In Lane	1.00		0.23	0.04		0.13	1.00		0.16	1.00		0.62
Lane Grp Cap(c), veh/h	591	0	890	633	0	0	267	0	367	353	0	338
V/C Ratio(X)	0.33	0.00	0.65	0.66	0.00	0.00	0.30	0.00	0.28	0.12	0.00	0.54
Avail Cap(c_a), veh/h	1121	0	2074	1411	0	0	711	0	965	838	0	891
HCM Platoon Ratio	1.00	1.00	1.00	1.00	1.00	1.00	1.00	1.00	1.00	1.00	1.00	1.00
Upstream Filter(I)	1.00	0.00	1.00	1.00	0.00	0.00	1.00	0.00	1.00	1.00	0.00	1.00
Uniform Delay (d), s/veh	8.5	0.0	8.6	17.3	0.0	0.0	24.1	0.0	18.4	20.3	0.0	19.6
Incr Delay (d2), s/veh	0.1	0.0	1.2	1.8	0.0	0.0	0.2	0.0	0.2	0.1	0.0	0.5
Initial Q Delay(d3),s/veh	0.0	0.0	0.0	0.0	0.0	0.0	0.0	0.0	0.0	0.0	0.0	0.0
%ile BackOfQ(95%),veh/ln	2.2	0.0	7.5	8.4	0.0	0.0	1.8	0.0	1.9	0.9	0.0	3.7
Unsig. Movement Delay, s/veh												
LnGrp Delay(d),s/veh	8.6	0.0	9.7	19.1	0.0	0.0	24.3	0.0	18.5	20.4	0.0	20.1
LnGrp LOS	A	A	A	B	A	A	C	A	B	C	A	C
Approach Vol, veh/h		769			419			183			226	
Approach Delay, s/veh		9.5			19.1			21.1			20.2	
Approach LOS		A			B			C			C	

Timer - Assigned Phs	1	2		4		6		8
Phs Duration (G+Y+Rc), s	14.1	24.0		19.8		38.1		19.8
Change Period (Y+Rc), s	6.5	* 5.3		6.5		* 5.3		6.5
Max Green Setting (Gmax), s	25.0	* 45		35.0		* 77		35.0
Max Q Clear Time (g_c+I1), s	5.6	14.0		12.1		16.5		8.3
Green Ext Time (p_c), s	0.2	4.6		0.4		7.7		0.6

Intersection Summary	
HCM 6th Ctrl Delay	14.8
HCM 6th LOS	B

Notes

* HCM 6th computational engine requires equal clearance times for the phases crossing the barrier.

Intersection	
Int Delay, s/veh	0.3

Movement	EBL	EBT	WBT	WBR	SBL	SBR
Lane Configurations		↑	↑		⋔	
Traffic Vol, veh/h	5	460	385	0	10	5
Future Vol, veh/h	5	460	385	0	10	5
Conflicting Peds, #/hr	0	0	0	0	0	0
Sign Control	Free	Free	Free	Free	Stop	Stop
RT Channelized	-	None	-	None	-	None
Storage Length	-	-	-	-	0	-
Veh in Median Storage, #	-	0	0	-	0	-
Grade, %	-	0	0	-	0	-
Peak Hour Factor	92	92	92	92	92	92
Heavy Vehicles, %	3	3	4	4	2	2
Mvmt Flow	5	500	418	0	11	5

Major/Minor	Major1		Major2		Minor2	
Conflicting Flow All	418	0	-	0	928	418
Stage 1	-	-	-	-	418	-
Stage 2	-	-	-	-	510	-
Critical Hdwy	4.13	-	-	-	6.42	6.22
Critical Hdwy Stg 1	-	-	-	-	5.42	-
Critical Hdwy Stg 2	-	-	-	-	5.42	-
Follow-up Hdwy	2.227	-	-	-	3.518	3.318
Pot Cap-1 Maneuver	1136	-	-	0	297	635
Stage 1	-	-	-	0	664	-
Stage 2	-	-	-	0	603	-
Platoon blocked, %		-	-			
Mov Cap-1 Maneuver	1136	-	-	-	295	635
Mov Cap-2 Maneuver	-	-	-	-	295	-
Stage 1	-	-	-	-	660	-
Stage 2	-	-	-	-	603	-

Approach	EB	WB	SB
HCM Control Delay, s	0.1	0	15.5
HCM LOS			C

Minor Lane/Major Mvmt	EBL	EBT	WBT	SBLn1
Capacity (veh/h)	1136	-	-	359
HCM Lane V/C Ratio	0.005	-	-	0.045
HCM Control Delay (s)	8.2	-	-	15.5
HCM Lane LOS	A	-	-	C
HCM 95th %tile Q(veh)	0	-	-	0.1

Intersection	
Int Delay, s/veh	1.1

Movement	EBL	EBT	WBT	WBR	SBL	SBR
Lane Configurations						
Traffic Vol, veh/h	50	420	375	45	20	10
Future Vol, veh/h	50	420	375	45	20	10
Conflicting Peds, #/hr	1	0	0	1	0	0
Sign Control	Free	Free	Free	Free	Stop	Stop
RT Channelized	-	None	-	None	-	None
Storage Length	-	-	-	-	0	-
Veh in Median Storage, #	-	0	0	-	0	-
Grade, %	-	0	0	-	0	-
Peak Hour Factor	87	87	87	87	87	87
Heavy Vehicles, %	3	3	4	4	1	1
Mvmt Flow	57	483	431	52	23	11

Major/Minor	Major1		Major2		Minor2	
Conflicting Flow All	484	0	-	0	1055	458
Stage 1	-	-	-	-	458	-
Stage 2	-	-	-	-	597	-
Critical Hdwy	4.13	-	-	-	6.41	6.21
Critical Hdwy Stg 1	-	-	-	-	5.41	-
Critical Hdwy Stg 2	-	-	-	-	5.41	-
Follow-up Hdwy	2.227	-	-	-	3.509	3.309
Pot Cap-1 Maneuver	1074	-	-	-	251	605
Stage 1	-	-	-	-	639	-
Stage 2	-	-	-	-	552	-
Platoon blocked, %		-	-	-		
Mov Cap-1 Maneuver	1073	-	-	-	232	604
Mov Cap-2 Maneuver	-	-	-	-	232	-
Stage 1	-	-	-	-	592	-
Stage 2	-	-	-	-	551	-

Approach	EB	WB	SB
HCM Control Delay, s	0.9	0	19
HCM LOS			C

Minor Lane/Major Mvmt	EBL	EBT	WBT	WBR	SBLn1
Capacity (veh/h)	1073	-	-	-	292
HCM Lane V/C Ratio	0.054	-	-	-	0.118
HCM Control Delay (s)	8.5	0	-	-	19
HCM Lane LOS	A	A	-	-	C
HCM 95th %tile Q(veh)	0.2	-	-	-	0.4

Intersection	
Int Delay, s/veh	0

Movement	EBL	EBT	WBT	WBR	SBL	SBR
Lane Configurations		↑	↑		⋔	
Traffic Vol, veh/h	0	440	420	0	0	0
Future Vol, veh/h	0	440	420	0	0	0
Conflicting Peds, #/hr	0	0	0	0	0	0
Sign Control	Free	Free	Free	Free	Stop	Stop
RT Channelized	-	None	-	None	-	None
Storage Length	-	-	-	-	0	-
Veh in Median Storage, #	-	0	0	-	0	-
Grade, %	-	0	0	-	0	-
Peak Hour Factor	92	92	92	92	92	92
Heavy Vehicles, %	2	2	4	4	2	2
Mvmt Flow	0	478	457	0	0	0

Major/Minor	Major1		Major2		Minor2	
Conflicting Flow All	-	0	-	0	935	457
Stage 1	-	-	-	-	457	-
Stage 2	-	-	-	-	478	-
Critical Hdwy	-	-	-	-	6.42	6.22
Critical Hdwy Stg 1	-	-	-	-	5.42	-
Critical Hdwy Stg 2	-	-	-	-	5.42	-
Follow-up Hdwy	-	-	-	-	3.518	3.318
Pot Cap-1 Maneuver	0	-	-	0	295	604
Stage 1	0	-	-	0	638	-
Stage 2	0	-	-	0	624	-
Platoon blocked, %		-	-			
Mov Cap-1 Maneuver	-	-	-	-	295	604
Mov Cap-2 Maneuver	-	-	-	-	295	-
Stage 1	-	-	-	-	638	-
Stage 2	-	-	-	-	624	-

Approach	EB	WB	SB
HCM Control Delay, s	0	0	0
HCM LOS			A

Minor Lane/Major Mvmt	EBT	WBT	SBLn1
Capacity (veh/h)	-	-	-
HCM Lane V/C Ratio	-	-	-
HCM Control Delay (s)	-	-	0
HCM Lane LOS	-	-	A
HCM 95th %tile Q(veh)	-	-	-

Intersection	
Int Delay, s/veh	0

Movement	EBT	EBR	WBL	WBT	NBL	NBR
Lane Configurations	↑			↑	⋔	
Traffic Vol, veh/h	440	0	0	420	0	0
Future Vol, veh/h	440	0	0	420	0	0
Conflicting Peds, #/hr	0	0	0	0	0	0
Sign Control	Free	Free	Free	Free	Stop	Stop
RT Channelized	-	None	-	None	-	None
Storage Length	-	-	-	-	0	-
Veh in Median Storage, #	0	-	-	0	0	-
Grade, %	0	-	-	0	0	-
Peak Hour Factor	92	92	92	92	92	92
Heavy Vehicles, %	2	2	4	4	2	2
Mvmt Flow	478	0	0	457	0	0

Major/Minor	Major1		Major2		Minor1	
Conflicting Flow All	0	-	-	-	935	478
Stage 1	-	-	-	-	478	-
Stage 2	-	-	-	-	457	-
Critical Hdwy	-	-	-	-	6.42	6.22
Critical Hdwy Stg 1	-	-	-	-	5.42	-
Critical Hdwy Stg 2	-	-	-	-	5.42	-
Follow-up Hdwy	-	-	-	-	3.518	3.318
Pot Cap-1 Maneuver	-	0	0	-	295	587
Stage 1	-	0	0	-	624	-
Stage 2	-	0	0	-	638	-
Platoon blocked, %	-			-		
Mov Cap-1 Maneuver	-	-	-	-	295	587
Mov Cap-2 Maneuver	-	-	-	-	295	-
Stage 1	-	-	-	-	624	-
Stage 2	-	-	-	-	638	-

Approach	EB	WB	NB
HCM Control Delay, s	0	0	0
HCM LOS			A

Minor Lane/Major Mvmt	NBLn1	EBT	WBT
Capacity (veh/h)	-	-	-
HCM Lane V/C Ratio	-	-	-
HCM Control Delay (s)	0	-	-
HCM Lane LOS	A	-	-
HCM 95th %tile Q(veh)	-	-	-

Movement	EBL	EBT	EBR	WBL	WBT	WBR	NBL	NBT	NBR	SBL	SBT	SBR
Lane Configurations												
Traffic Volume (veh/h)	55	280	105	35	315	85	50	45	20	60	35	55
Future Volume (veh/h)	55	280	105	35	315	85	50	45	20	60	35	55
Initial Q (Qb), veh	0	0	0	0	0	0	0	0	0	0	0	0
Ped-Bike Adj(A_pbT)	1.00		1.00	1.00		0.98	1.00		0.98	1.00		1.00
Parking Bus, Adj	1.00	1.00	1.00	1.00	1.00	1.00	1.00	1.00	1.00	1.00	1.00	1.00
Work Zone On Approach		No			No			No			No	
Adj Sat Flow, veh/h/ln	1870	1870	1870	1870	1870	1870	1885	1885	1885	1885	1885	1885
Adj Flow Rate, veh/h	67	341	128	43	384	104	61	55	24	73	43	67
Peak Hour Factor	0.82	0.82	0.82	0.82	0.82	0.82	0.82	0.82	0.82	0.82	0.82	0.82
Percent Heavy Veh, %	2	2	2	2	2	2	1	1	1	1	1	1
Cap, veh/h	562	563	211	515	812	674	305	130	45	600	126	197
Arrive On Green	0.43	0.43	0.43	0.43	0.43	0.43	0.19	0.19	0.19	0.19	0.19	0.19
Sat Flow, veh/h	908	1296	487	924	1870	1552	469	686	239	1330	664	1035
Grp Volume(v), veh/h	67	0	469	43	384	104	140	0	0	73	0	110
Grp Sat Flow(s),veh/h/ln	908	0	1783	924	1870	1552	1394	0	0	1330	0	1699
Q Serve(g_s), s	1.4	0.0	4.8	0.9	3.5	1.0	1.1	0.0	0.0	0.0	0.0	1.3
Cycle Q Clear(g_c), s	4.9	0.0	4.8	5.7	3.5	1.0	2.4	0.0	0.0	0.8	0.0	1.3
Prop In Lane	1.00		0.27	1.00		1.00	0.44		0.17	1.00		0.61
Lane Grp Cap(c), veh/h	562	0	774	515	812	674	481	0	0	600	0	323
V/C Ratio(X)	0.12	0.00	0.61	0.08	0.47	0.15	0.29	0.00	0.00	0.12	0.00	0.34
Avail Cap(c_a), veh/h	1135	0	1898	1098	1992	1653	1816	0	0	1764	0	1809
HCM Platoon Ratio	1.00	1.00	1.00	1.00	1.00	1.00	1.00	1.00	1.00	1.00	1.00	1.00
Upstream Filter(I)	1.00	0.00	1.00	1.00	1.00	1.00	1.00	0.00	0.00	1.00	0.00	1.00
Uniform Delay (d), s/veh	6.6	0.0	5.2	7.4	4.8	4.1	8.8	0.0	0.0	8.2	0.0	8.4
Incr Delay (d2), s/veh	0.1	0.0	0.8	0.1	0.4	0.1	0.3	0.0	0.0	0.1	0.0	0.6
Initial Q Delay(d3),s/veh	0.0	0.0	0.0	0.0	0.0	0.0	0.0	0.0	0.0	0.0	0.0	0.0
%ile BackOfQ(95%),veh/ln	0.3	0.0	1.3	0.2	0.8	0.2	0.9	0.0	0.0	0.4	0.0	0.7
Unsig. Movement Delay, s/veh												
LnGrp Delay(d),s/veh	6.6	0.0	6.0	7.5	5.3	4.2	9.1	0.0	0.0	8.3	0.0	9.0
LnGrp LOS	A	A	A	A	A	A	A	A	A	A	A	A
Approach Vol, veh/h		536			531			140			183	
Approach Delay, s/veh		6.1			5.2			9.1			8.7	
Approach LOS		A			A			A			A	

Timer - Assigned Phs	2	4	6	8
Phs Duration (G+Y+Rc), s	9.0	14.9	9.0	14.9
Change Period (Y+Rc), s	4.5	4.5	4.5	4.5
Max Green Setting (Gmax), s	25.5	25.5	25.5	25.5
Max Q Clear Time (g_c+I1), s	4.4	6.9	3.3	7.7
Green Ext Time (p_c), s	0.8	3.3	0.8	2.7

Intersection Summary	
HCM 6th Ctrl Delay	6.4
HCM 6th LOS	A

HCM 6th Signalized Intersection Summary
1: Jackson Dr & WIS-60

05/19/2020

Movement	EBL	EBT	EBR	WBL	WBT	WBR	NBL	NBT	NBR	SBL	SBT	SBR
Lane Configurations												
Traffic Volume (veh/h)	65	320	85	15	350	35	95	45	15	25	35	80
Future Volume (veh/h)	65	320	85	15	350	35	95	45	15	25	35	80
Initial Q (Qb), veh	0	0	0	0	0	0	0	0	0	0	0	0
Ped-Bike Adj(A_pbT)	1.00		1.00	1.00		1.00	1.00		1.00	1.00		1.00
Parking Bus, Adj	1.00	1.00	1.00	1.00	1.00	1.00	1.00	1.00	1.00	1.00	1.00	1.00
Work Zone On Approach		No			No			No			No	
Adj Sat Flow, veh/h/ln	1870	1659	1659	1870	1870	1870	1885	1672	1672	1870	1659	1659
Adj Flow Rate, veh/h	66	327	87	15	357	36	97	46	15	26	36	82
Peak Hour Factor	0.98	0.98	0.98	0.98	0.98	0.98	0.98	0.98	0.98	0.98	0.98	0.98
Percent Heavy Veh, %	2	2	2	2	2	2	1	1	1	2	2	2
Cap, veh/h	598	704	187	85	536	53	315	242	79	374	90	206
Arrive On Green	0.10	0.56	0.56	0.33	0.33	0.33	0.20	0.20	0.20	0.20	0.20	0.20
Sat Flow, veh/h	1781	1262	336	26	1630	160	1284	1207	394	1341	450	1025
Grp Volume(v), veh/h	66	0	414	408	0	0	97	0	61	26	0	118
Grp Sat Flow(s),veh/h/ln	1781	0	1597	1817	0	0	1284	0	1601	1341	0	1474
Q Serve(g_s), s	1.0	0.0	7.6	0.0	0.0	0.0	3.5	0.0	1.6	0.8	0.0	3.4
Cycle Q Clear(g_c), s	1.0	0.0	7.6	9.4	0.0	0.0	6.9	0.0	1.6	2.4	0.0	3.4
Prop In Lane	1.00		0.21	0.04		0.09	1.00		0.25	1.00		0.69
Lane Grp Cap(c), veh/h	598	0	892	674	0	0	315	0	321	374	0	296
V/C Ratio(X)	0.11	0.00	0.46	0.61	0.00	0.00	0.31	0.00	0.19	0.07	0.00	0.40
Avail Cap(c_a), veh/h	1335	0	2494	1723	0	0	975	0	1144	1063	0	1053
HCM Platoon Ratio	1.00	1.00	1.00	1.00	1.00	1.00	1.00	1.00	1.00	1.00	1.00	1.00
Upstream Filter(I)	1.00	0.00	1.00	1.00	0.00	0.00	1.00	0.00	1.00	1.00	0.00	1.00
Uniform Delay (d), s/veh	7.2	0.0	6.4	14.2	0.0	0.0	20.0	0.0	16.3	17.2	0.0	17.0
Incr Delay (d2), s/veh	0.0	0.0	0.6	1.3	0.0	0.0	0.2	0.0	0.1	0.0	0.0	0.3
Initial Q Delay(d3),s/veh	0.0	0.0	0.0	0.0	0.0	0.0	0.0	0.0	0.0	0.0	0.0	0.0
%ile BackOfQ(95%),veh/ln	0.6	0.0	3.6	6.5	0.0	0.0	1.8	0.0	1.0	0.4	0.0	1.9
Unsig. Movement Delay, s/veh												
LnGrp Delay(d),s/veh	7.3	0.0	7.0	15.5	0.0	0.0	20.2	0.0	16.4	17.3	0.0	17.3
LnGrp LOS	A	A	A	B	A	A	C	A	B	B	A	B
Approach Vol, veh/h		480			408			158			144	
Approach Delay, s/veh		7.0			15.5			18.7			17.3	
Approach LOS		A			B			B			B	

Timer - Assigned Phs	1	2		4		6		8
Phs Duration (G+Y+Rc), s	11.2	21.4		16.3		32.7		16.3
Change Period (Y+Rc), s	6.5	* 5.3		6.5		* 5.3		6.5
Max Green Setting (Gmax), s	25.0	* 45		35.0		* 77		35.0
Max Q Clear Time (g_c+I1), s	3.0	11.4		8.9		9.6		5.4
Green Ext Time (p_c), s	0.0	4.5		0.3		4.9		0.4

Intersection Summary	
HCM 6th Ctrl Delay	12.7
HCM 6th LOS	B

Notes

* HCM 6th computational engine requires equal clearance times for the phases crossing the barrier.

Intersection	
Int Delay, s/veh	0

Movement	EBL	EBT	WBT	WBR	SBL	SBR
Lane Configurations		↑	↑		⋔	
Traffic Vol, veh/h	0	360	400	0	0	0
Future Vol, veh/h	0	360	400	0	0	0
Conflicting Peds, #/hr	0	0	0	0	0	0
Sign Control	Free	Free	Free	Free	Stop	Stop
RT Channelized	-	None	-	None	-	None
Storage Length	-	-	-	-	0	-
Veh in Median Storage, #	-	0	0	-	0	-
Grade, %	-	0	0	-	0	-
Peak Hour Factor	92	92	92	92	92	92
Heavy Vehicles, %	3	3	2	2	2	2
Mvmt Flow	0	391	435	0	0	0

Major/Minor	Major1		Major2		Minor2	
Conflicting Flow All	-	0	-	0	826	435
Stage 1	-	-	-	-	435	-
Stage 2	-	-	-	-	391	-
Critical Hdwy	-	-	-	-	6.42	6.22
Critical Hdwy Stg 1	-	-	-	-	5.42	-
Critical Hdwy Stg 2	-	-	-	-	5.42	-
Follow-up Hdwy	-	-	-	-	3.518	3.318
Pot Cap-1 Maneuver	0	-	-	0	342	621
Stage 1	0	-	-	0	653	-
Stage 2	0	-	-	0	683	-
Platoon blocked, %		-	-			
Mov Cap-1 Maneuver	-	-	-	-	342	621
Mov Cap-2 Maneuver	-	-	-	-	342	-
Stage 1	-	-	-	-	653	-
Stage 2	-	-	-	-	683	-

Approach	EB	WB	SB
HCM Control Delay, s	0	0	0
HCM LOS			A

Minor Lane/Major Mvmt	EBT	WBT	SBLn1
Capacity (veh/h)	-	-	-
HCM Lane V/C Ratio	-	-	-
HCM Control Delay (s)	-	-	0
HCM Lane LOS	-	-	A
HCM 95th %tile Q(veh)	-	-	-

Intersection	
Int Delay, s/veh	1.1

Movement	EBL	EBT	WBT	WBR	SBL	SBR
Lane Configurations						
Traffic Vol, veh/h	20	340	365	20	20	35
Future Vol, veh/h	20	340	365	20	20	35
Conflicting Peds, #/hr	1	0	0	1	0	0
Sign Control	Free	Free	Free	Free	Stop	Stop
RT Channelized	-	None	-	None	-	None
Storage Length	-	-	-	-	0	-
Veh in Median Storage, #	-	0	0	-	0	-
Grade, %	-	0	0	-	0	-
Peak Hour Factor	94	94	94	94	94	94
Heavy Vehicles, %	3	3	3	3	2	2
Mvmt Flow	21	362	388	21	21	37

Major/Minor	Major1		Major2		Minor2	
Conflicting Flow All	410	0	-	0	804	400
Stage 1	-	-	-	-	400	-
Stage 2	-	-	-	-	404	-
Critical Hdwy	4.13	-	-	-	6.42	6.22
Critical Hdwy Stg 1	-	-	-	-	5.42	-
Critical Hdwy Stg 2	-	-	-	-	5.42	-
Follow-up Hdwy	2.227	-	-	-	3.518	3.318
Pot Cap-1 Maneuver	1143	-	-	-	352	650
Stage 1	-	-	-	-	677	-
Stage 2	-	-	-	-	674	-
Platoon blocked, %		-	-	-		
Mov Cap-1 Maneuver	1142	-	-	-	343	649
Mov Cap-2 Maneuver	-	-	-	-	343	-
Stage 1	-	-	-	-	661	-
Stage 2	-	-	-	-	673	-

Approach	EB	WB	SB
HCM Control Delay, s	0.5	0	13.3
HCM LOS			B

Minor Lane/Major Mvmt	EBL	EBT	WBT	WBR	SBLn1
Capacity (veh/h)	1142	-	-	-	490
HCM Lane V/C Ratio	0.019	-	-	-	0.119
HCM Control Delay (s)	8.2	0	-	-	13.3
HCM Lane LOS	A	A	-	-	B
HCM 95th %tile Q(veh)	0.1	-	-	-	0.4

Intersection	
Int Delay, s/veh	0

Movement	EBL	EBT	WBT	WBR	SBL	SBR
Lane Configurations		↑	↑		⋔	
Traffic Vol, veh/h	0	360	385	0	0	0
Future Vol, veh/h	0	360	385	0	0	0
Conflicting Peds, #/hr	0	0	0	0	0	0
Sign Control	Free	Free	Free	Free	Stop	Stop
RT Channelized	-	None	-	None	-	None
Storage Length	-	-	-	-	0	-
Veh in Median Storage, #	-	0	0	-	0	-
Grade, %	-	0	0	-	0	-
Peak Hour Factor	92	92	92	92	92	92
Heavy Vehicles, %	2	2	3	3	2	2
Mvmt Flow	0	391	418	0	0	0

Major/Minor	Major1		Major2		Minor2	
Conflicting Flow All	-	0	-	0	809	418
Stage 1	-	-	-	-	418	-
Stage 2	-	-	-	-	391	-
Critical Hdwy	-	-	-	-	6.42	6.22
Critical Hdwy Stg 1	-	-	-	-	5.42	-
Critical Hdwy Stg 2	-	-	-	-	5.42	-
Follow-up Hdwy	-	-	-	-	3.518	3.318
Pot Cap-1 Maneuver	0	-	-	0	350	635
Stage 1	0	-	-	0	664	-
Stage 2	0	-	-	0	683	-
Platoon blocked, %		-	-			
Mov Cap-1 Maneuver	-	-	-	-	350	635
Mov Cap-2 Maneuver	-	-	-	-	350	-
Stage 1	-	-	-	-	664	-
Stage 2	-	-	-	-	683	-

Approach	EB	WB	SB
HCM Control Delay, s	0	0	0
HCM LOS			A

Minor Lane/Major Mvmt	EBT	WBT	SBLn1
Capacity (veh/h)	-	-	-
HCM Lane V/C Ratio	-	-	-
HCM Control Delay (s)	-	-	0
HCM Lane LOS	-	-	A
HCM 95th %tile Q(veh)	-	-	-

Intersection	
Int Delay, s/veh	0

Movement	EBT	EBR	WBL	WBT	NBL	NBR
Lane Configurations	↑			↑	⋔	
Traffic Vol, veh/h	360	0	0	385	0	0
Future Vol, veh/h	360	0	0	385	0	0
Conflicting Peds, #/hr	0	0	0	0	0	0
Sign Control	Free	Free	Free	Free	Stop	Stop
RT Channelized	-	None	-	None	-	None
Storage Length	-	-	-	-	0	-
Veh in Median Storage, #	0	-	-	0	0	-
Grade, %	0	-	-	0	0	-
Peak Hour Factor	92	92	92	92	92	92
Heavy Vehicles, %	2	2	3	3	2	2
Mvmt Flow	391	0	0	418	0	0

Major/Minor	Major1		Major2		Minor1	
Conflicting Flow All	0	-	-	-	809	391
Stage 1	-	-	-	-	391	-
Stage 2	-	-	-	-	418	-
Critical Hdwy	-	-	-	-	6.42	6.22
Critical Hdwy Stg 1	-	-	-	-	5.42	-
Critical Hdwy Stg 2	-	-	-	-	5.42	-
Follow-up Hdwy	-	-	-	-	3.518	3.318
Pot Cap-1 Maneuver	-	0	0	-	350	658
Stage 1	-	0	0	-	683	-
Stage 2	-	0	0	-	664	-
Platoon blocked, %	-			-		
Mov Cap-1 Maneuver	-	-	-	-	350	658
Mov Cap-2 Maneuver	-	-	-	-	350	-
Stage 1	-	-	-	-	683	-
Stage 2	-	-	-	-	664	-

Approach	EB	WB	NB
HCM Control Delay, s	0	0	0
HCM LOS			A

Minor Lane/Major Mvmt	NBLn1	EBT	WBT
Capacity (veh/h)	-	-	-
HCM Lane V/C Ratio	-	-	-
HCM Control Delay (s)	0	-	-
HCM Lane LOS	A	-	-
HCM 95th %tile Q(veh)	-	-	-

Movement	EBL	EBT	EBR	WBL	WBT	WBR	NBL	NBT	NBR	SBL	SBT	SBR
Lane Configurations												
Traffic Volume (veh/h)	50	240	70	20	260	40	50	30	10	60	30	75
Future Volume (veh/h)	50	240	70	20	260	40	50	30	10	60	30	75
Initial Q (Qb), veh	0	0	0	0	0	0	0	0	0	0	0	0
Ped-Bike Adj(A_pbT)	1.00		1.00	1.00		1.00	1.00		1.00	1.00		1.00
Parking Bus, Adj	1.00	1.00	1.00	1.00	1.00	1.00	1.00	1.00	1.00	1.00	1.00	1.00
Work Zone On Approach		No			No			No			No	
Adj Sat Flow, veh/h/ln	1870	1870	1870	1856	1856	1856	1870	1870	1870	1885	1885	1885
Adj Flow Rate, veh/h	54	261	76	22	283	43	54	33	11	65	33	82
Peak Hour Factor	0.92	0.92	0.92	0.92	0.92	0.92	0.92	0.92	0.92	0.92	0.92	0.92
Percent Heavy Veh, %	2	2	2	3	3	3	2	2	2	1	1	1
Cap, veh/h	616	506	147	578	675	572	383	117	29	654	93	232
Arrive On Green	0.36	0.36	0.36	0.36	0.36	0.36	0.19	0.19	0.19	0.19	0.19	0.19
Sat Flow, veh/h	1054	1392	405	1035	1856	1572	560	603	147	1373	479	1191
Grp Volume(v), veh/h	54	0	337	22	283	43	98	0	0	65	0	115
Grp Sat Flow(s),veh/h/ln	1054	0	1797	1035	1856	1572	1311	0	0	1373	0	1671
Q Serve(g_s), s	0.8	0.0	3.0	0.3	2.3	0.4	0.4	0.0	0.0	0.0	0.0	1.2
Cycle Q Clear(g_c), s	3.2	0.0	3.0	3.3	2.3	0.4	1.6	0.0	0.0	0.6	0.0	1.2
Prop In Lane	1.00		0.23	1.00		1.00	0.55		0.11	1.00		0.71
Lane Grp Cap(c), veh/h	616	0	654	578	675	572	529	0	0	654	0	325
V/C Ratio(X)	0.09	0.00	0.52	0.04	0.42	0.08	0.19	0.00	0.00	0.10	0.00	0.35
Avail Cap(c_a), veh/h	1552	0	2249	1497	2322	1968	2078	0	0	2105	0	2091
HCM Platoon Ratio	1.00	1.00	1.00	1.00	1.00	1.00	1.00	1.00	1.00	1.00	1.00	1.00
Upstream Filter(I)	1.00	0.00	1.00	1.00	1.00	1.00	1.00	0.00	0.00	1.00	0.00	1.00
Uniform Delay (d), s/veh	6.1	0.0	5.1	6.4	4.9	4.2	7.2	0.0	0.0	6.9	0.0	7.1
Incr Delay (d2), s/veh	0.1	0.0	0.6	0.0	0.4	0.1	0.2	0.0	0.0	0.1	0.0	0.7
Initial Q Delay(d3),s/veh	0.0	0.0	0.0	0.0	0.0	0.0	0.0	0.0	0.0	0.0	0.0	0.0
%ile BackOfQ(95%),veh/ln	0.2	0.0	0.7	0.1	0.4	0.1	0.4	0.0	0.0	0.3	0.0	0.5
Unsig. Movement Delay, s/veh												
LnGrp Delay(d),s/veh	6.1	0.0	5.7	6.4	5.3	4.3	7.3	0.0	0.0	6.9	0.0	7.8
LnGrp LOS	A	A	A	A	A	A	A	A	A	A	A	A
Approach Vol, veh/h		391			348			98			180	
Approach Delay, s/veh		5.8			5.2			7.3			7.5	
Approach LOS		A			A			A			A	

Timer - Assigned Phs	2	4	6	8
Phs Duration (G+Y+Rc), s	8.5	11.9	8.5	11.9
Change Period (Y+Rc), s	4.5	4.5	4.5	4.5
Max Green Setting (Gmax), s	25.5	25.5	25.5	25.5
Max Q Clear Time (g_c+I1), s	3.6	5.2	3.2	5.3
Green Ext Time (p_c), s	0.5	2.3	0.8	1.7

Intersection Summary	
HCM 6th Ctrl Delay	6.0
HCM 6th LOS	A

Appendix F: Transportation System Improvements with Build Traffic Operational Analysis

Base Year Build - Improved Capacity analysis inputs/outputs
Interim Year Build - Improved Capacity analysis inputs/outputs
Horizon Year Build Alt 1 - Improved Capacity analysis inputs/outputs
Horizon Year Build Alt 2 - Improved Capacity analysis inputs/outputs

HCM 6th Signalized Intersection Summary
1: Jackson Dr & WIS-60

05/19/2020

Movement	EBL	EBT	EBR	WBL	WBT	WBR	NBL	NBT	NBR	SBL	SBT	SBR
Lane Configurations												
Traffic Volume (veh/h)	70	345	30	10	340	20	110	50	25	50	25	180
Future Volume (veh/h)	70	345	30	10	340	20	110	50	25	50	25	180
Initial Q (Qb), veh	0	0	0	0	0	0	0	0	0	0	0	0
Ped-Bike Adj(A_pbT)	1.00		1.00	1.00		1.00	1.00		0.97	1.00		0.99
Parking Bus, Adj	1.00	1.00	1.00	1.00	1.00	1.00	1.00	1.00	1.00	1.00	1.00	1.00
Work Zone On Approach		No			No			No			No	
Adj Sat Flow, veh/h/ln	1752	1554	1554	1767	1767	1767	1826	1619	1619	1856	1646	1646
Adj Flow Rate, veh/h	73	359	31	10	354	21	115	52	26	52	26	188
Peak Hour Factor	0.96	0.96	0.96	0.96	0.96	0.96	0.96	0.96	0.96	0.96	0.96	0.96
Percent Heavy Veh, %	10	10	10	9	9	9	5	5	5	3	3	3
Cap, veh/h	506	729	63	70	499	29	293	278	139	434	47	342
Arrive On Green	0.10	0.52	0.52	0.31	0.31	0.31	0.28	0.28	0.28	0.28	0.28	0.28
Sat Flow, veh/h	1668	1410	122	16	1625	95	1136	1008	504	1305	172	1242
Grp Volume(v), veh/h	73	0	390	385	0	0	115	0	78	52	0	214
Grp Sat Flow(s),veh/h/ln	1668	0	1531	1735	0	0	1136	0	1511	1305	0	1414
Q Serve(g_s), s	1.5	0.0	9.4	0.0	0.0	0.0	5.5	0.0	2.2	1.8	0.0	7.4
Cycle Q Clear(g_c), s	1.5	0.0	9.4	11.2	0.0	0.0	12.8	0.0	2.2	4.1	0.0	7.4
Prop In Lane	1.00		0.08	0.03		0.05	1.00		0.33	1.00		0.88
Lane Grp Cap(c), veh/h	506	0	792	598	0	0	293	0	417	434	0	390
V/C Ratio(X)	0.14	0.00	0.49	0.64	0.00	0.00	0.39	0.00	0.19	0.12	0.00	0.55
Avail Cap(c_a), veh/h	1077	0	2054	1422	0	0	677	0	928	875	0	868
HCM Platoon Ratio	1.00	1.00	1.00	1.00	1.00	1.00	1.00	1.00	1.00	1.00	1.00	1.00
Upstream Filter(I)	1.00	0.00	1.00	1.00	0.00	0.00	1.00	0.00	1.00	1.00	0.00	1.00
Uniform Delay (d), s/veh	9.4	0.0	8.9	17.5	0.0	0.0	23.1	0.0	15.8	17.3	0.0	17.6
Incr Delay (d2), s/veh	0.0	0.0	0.7	1.7	0.0	0.0	0.3	0.0	0.1	0.0	0.0	0.4
Initial Q Delay(d3),s/veh	0.0	0.0	0.0	0.0	0.0	0.0	0.0	0.0	0.0	0.0	0.0	0.0
%ile BackOfQ(95%),veh/ln	0.9	0.0	5.0	7.8	0.0	0.0	2.5	0.0	1.3	0.9	0.0	4.1
Unsig. Movement Delay, s/veh												
LnGrp Delay(d),s/veh	9.4	0.0	9.6	19.3	0.0	0.0	23.4	0.0	15.9	17.4	0.0	18.1
LnGrp LOS	A	A	A	B	A	A	C	A	B	B	A	B
Approach Vol, veh/h		463			385			193			266	
Approach Delay, s/veh		9.6			19.3			20.4			17.9	
Approach LOS		A			B			C			B	

Timer - Assigned Phs	1	2		4		6		8
Phs Duration (G+Y+Rc), s	12.0	22.8		22.2		34.8		22.2
Change Period (Y+Rc), s	6.5	* 5.3		6.5		* 5.3		6.5
Max Green Setting (Gmax), s	25.0	* 45		35.0		* 77		35.0
Max Q Clear Time (g_c+I1), s	3.5	13.2		14.8		11.4		9.4
Green Ext Time (p_c), s	0.1	4.1		0.4		4.5		0.8

Intersection Summary	
HCM 6th Ctrl Delay	15.7
HCM 6th LOS	B

Notes

* HCM 6th computational engine requires equal clearance times for the phases crossing the barrier.

Intersection	
Int Delay, s/veh	0.2

Movement	EBL	EBT	WBT	WBR	SBL	SBR
Lane Configurations		↑	↑		⋔	
Traffic Vol, veh/h	10	410	370	5	5	0
Future Vol, veh/h	10	410	370	5	5	0
Conflicting Peds, #/hr	0	0	0	0	0	0
Sign Control	Free	Free	Free	Free	Stop	Stop
RT Channelized	-	None	-	None	-	None
Storage Length	-	-	-	-	0	-
Veh in Median Storage, #	-	0	0	-	0	-
Grade, %	-	0	0	-	0	-
Peak Hour Factor	92	92	92	92	92	92
Heavy Vehicles, %	4	4	9	9	2	2
Mvmt Flow	11	446	402	5	5	0

Major/Minor	Major1		Major2		Minor2	
Conflicting Flow All	407	0	-	0	873	405
Stage 1	-	-	-	-	405	-
Stage 2	-	-	-	-	468	-
Critical Hdwy	4.14	-	-	-	6.42	6.22
Critical Hdwy Stg 1	-	-	-	-	5.42	-
Critical Hdwy Stg 2	-	-	-	-	5.42	-
Follow-up Hdwy	2.236	-	-	-	3.518	3.318
Pot Cap-1 Maneuver	1141	-	-	-	321	646
Stage 1	-	-	-	-	673	-
Stage 2	-	-	-	-	630	-
Platoon blocked, %		-	-	-		
Mov Cap-1 Maneuver	1141	-	-	-	317	646
Mov Cap-2 Maneuver	-	-	-	-	317	-
Stage 1	-	-	-	-	664	-
Stage 2	-	-	-	-	630	-

Approach	EB	WB	SB
HCM Control Delay, s	0.2	0	16.6
HCM LOS			C

Minor Lane/Major Mvmt	EBL	EBT	WBT	WBR	SBLn1
Capacity (veh/h)	1141	-	-	-	317
HCM Lane V/C Ratio	0.01	-	-	-	0.017
HCM Control Delay (s)	8.2	-	-	-	16.6
HCM Lane LOS	A	-	-	-	C
HCM 95th %tile Q(veh)	0	-	-	-	0.1

Intersection	
Int Delay, s/veh	3.6

Movement	EBL	EBT	EBR	WBL	WBT	WBR	NBL	NBT	NBR	SBL	SBT	SBR
Lane Configurations												
Traffic Vol, veh/h	10	380	25	5	310	15	5	0	5	70	0	60
Future Vol, veh/h	10	380	25	5	310	15	5	0	5	70	0	60
Conflicting Peds, #/hr	0	0	0	0	0	0	0	0	0	0	0	0
Sign Control	Free	Free	Free	Free	Free	Free	Stop	Stop	Stop	Stop	Stop	Stop
RT Channelized	-	-	None	-	-	None	-	-	None	-	-	None
Storage Length	-	-	-	-	-	-	-	-	-	-	-	-
Veh in Median Storage, #	-	0	-	-	0	-	-	0	-	-	0	-
Grade, %	-	0	-	-	0	-	-	0	-	-	0	-
Peak Hour Factor	84	84	84	84	84	84	84	84	84	84	84	84
Heavy Vehicles, %	4	4	4	6	6	6	2	2	2	1	1	1
Mvmt Flow	12	452	30	6	369	18	6	0	6	83	0	71

Major/Minor	Major1			Major2			Minor1			Minor2		
Conflicting Flow All	387	0	0	482	0	0	917	890	467	884	896	378
Stage 1	-	-	-	-	-	-	491	491	-	390	390	-
Stage 2	-	-	-	-	-	-	426	399	-	494	506	-
Critical Hdwy	4.14	-	-	4.16	-	-	7.12	6.52	6.22	7.11	6.51	6.21
Critical Hdwy Stg 1	-	-	-	-	-	-	6.12	5.52	-	6.11	5.51	-
Critical Hdwy Stg 2	-	-	-	-	-	-	6.12	5.52	-	6.11	5.51	-
Follow-up Hdwy	2.236	-	-	2.254	-	-	3.518	4.018	3.318	3.509	4.009	3.309
Pot Cap-1 Maneuver	1161	-	-	1060	-	-	253	282	596	267	281	671
Stage 1	-	-	-	-	-	-	559	548	-	636	609	-
Stage 2	-	-	-	-	-	-	606	602	-	559	541	-
Platoon blocked, %		-	-		-	-						
Mov Cap-1 Maneuver	1161	-	-	1060	-	-	222	276	596	260	275	671
Mov Cap-2 Maneuver	-	-	-	-	-	-	222	276	-	260	275	-
Stage 1	-	-	-	-	-	-	551	540	-	627	605	-
Stage 2	-	-	-	-	-	-	538	598	-	546	533	-

Approach	EB	WB	NB	SB
HCM Control Delay, s	0.2	0.1	16.5	22.2
HCM LOS			C	C

Minor Lane/Major Mvmt	NBLn1	EBL	EBT	EBR	WBL	WBT	WBR	SBLn1
Capacity (veh/h)	324	1161	-	-	1060	-	-	362
HCM Lane V/C Ratio	0.037	0.01	-	-	0.006	-	-	0.428
HCM Control Delay (s)	16.5	8.1	0	-	8.4	0	-	22.2
HCM Lane LOS	C	A	A	-	A	A	-	C
HCM 95th %tile Q(veh)	0.1	0	-	-	0	-	-	2.1

Intersection	
Int Delay, s/veh	0

Movement	EBL	EBT	WBT	WBR	SBL	SBR
Lane Configurations		↑	↑		⋔	
Traffic Vol, veh/h	0	455	330	0	0	0
Future Vol, veh/h	0	455	330	0	0	0
Conflicting Peds, #/hr	0	0	0	0	0	0
Sign Control	Free	Free	Free	Free	Stop	Stop
RT Channelized	-	None	-	None	-	None
Storage Length	-	-	-	-	0	-
Veh in Median Storage, #	-	0	0	-	0	-
Grade, %	-	0	0	-	0	-
Peak Hour Factor	92	92	92	92	92	92
Heavy Vehicles, %	6	6	6	6	2	2
Mvmt Flow	0	495	359	0	0	0

Major/Minor	Major1		Major2		Minor2	
Conflicting Flow All	-	0	-	0	854	359
Stage 1	-	-	-	-	359	-
Stage 2	-	-	-	-	495	-
Critical Hdwy	-	-	-	-	6.42	6.22
Critical Hdwy Stg 1	-	-	-	-	5.42	-
Critical Hdwy Stg 2	-	-	-	-	5.42	-
Follow-up Hdwy	-	-	-	-	3.518	3.318
Pot Cap-1 Maneuver	0	-	-	0	329	685
Stage 1	0	-	-	0	707	-
Stage 2	0	-	-	0	613	-
Platoon blocked, %		-	-			
Mov Cap-1 Maneuver	-	-	-	-	329	685
Mov Cap-2 Maneuver	-	-	-	-	329	-
Stage 1	-	-	-	-	707	-
Stage 2	-	-	-	-	613	-

Approach	EB	WB	SB
HCM Control Delay, s	0	0	0
HCM LOS			A

Minor Lane/Major Mvmt	EBT	WBT	SBLn1
Capacity (veh/h)	-	-	-
HCM Lane V/C Ratio	-	-	-
HCM Control Delay (s)	-	-	0
HCM Lane LOS	-	-	A
HCM 95th %tile Q(veh)	-	-	-

Intersection	
Int Delay, s/veh	0

Movement	EBT	EBR	WBL	WBT	NBL	NBR
Lane Configurations	↑			↑	⋔	
Traffic Vol, veh/h	455	0	0	330	0	0
Future Vol, veh/h	455	0	0	330	0	0
Conflicting Peds, #/hr	0	0	0	0	0	0
Sign Control	Free	Free	Free	Free	Stop	Stop
RT Channelized	-	None	-	None	-	None
Storage Length	-	-	-	-	0	-
Veh in Median Storage, #	0	-	-	0	0	-
Grade, %	0	-	-	0	0	-
Peak Hour Factor	92	92	92	92	92	92
Heavy Vehicles, %	6	6	6	6	2	2
Mvmt Flow	495	0	0	359	0	0

Major/Minor	Major1		Major2		Minor1	
Conflicting Flow All	0	-	-	-	854	495
Stage 1	-	-	-	-	495	-
Stage 2	-	-	-	-	359	-
Critical Hdwy	-	-	-	-	6.42	6.22
Critical Hdwy Stg 1	-	-	-	-	5.42	-
Critical Hdwy Stg 2	-	-	-	-	5.42	-
Follow-up Hdwy	-	-	-	-	3.518	3.318
Pot Cap-1 Maneuver	-	0	0	-	329	575
Stage 1	-	0	0	-	613	-
Stage 2	-	0	0	-	707	-
Platoon blocked, %	-			-		
Mov Cap-1 Maneuver	-	-	-	-	329	575
Mov Cap-2 Maneuver	-	-	-	-	329	-
Stage 1	-	-	-	-	613	-
Stage 2	-	-	-	-	707	-

Approach	EB	WB	NB
HCM Control Delay, s	0	0	0
HCM LOS			A

Minor Lane/Major Mvmt	NBLn1	EBT	WBT
Capacity (veh/h)	-	-	-
HCM Lane V/C Ratio	-	-	-
HCM Control Delay (s)	0	-	-
HCM Lane LOS	A	-	-
HCM 95th %tile Q(veh)	-	-	-

Movement	EBL	EBT	EBR	WBL	WBT	WBR	NBL	NBT	NBR	SBL	SBT	SBR
Lane Configurations												
Traffic Volume (veh/h)	70	350	35	15	240	85	25	20	25	80	15	65
Future Volume (veh/h)	70	350	35	15	240	85	25	20	25	80	15	65
Initial Q (Qb), veh	0	0	0	0	0	0	0	0	0	0	0	0
Ped-Bike Adj(A_pbT)	1.00		1.00	1.00		1.00	1.00		1.00	1.00		1.00
Parking Bus, Adj	1.00	1.00	1.00	1.00	1.00	1.00	1.00	1.00	1.00	1.00	1.00	1.00
Work Zone On Approach		No			No			No			No	
Adj Sat Flow, veh/h/ln	1811	1811	1811	1841	1841	1841	1796	1796	1796	1811	1811	1811
Adj Flow Rate, veh/h	83	417	42	18	286	101	30	24	30	95	18	77
Peak Hour Factor	0.84	0.84	0.84	0.84	0.84	0.84	0.84	0.84	0.84	0.84	0.84	0.84
Percent Heavy Veh, %	6	6	6	4	4	4	7	7	7	6	6	6
Cap, veh/h	626	696	70	525	791	670	279	103	94	569	54	230
Arrive On Green	0.43	0.43	0.43	0.43	0.43	0.43	0.18	0.18	0.18	0.18	0.18	0.18
Sat Flow, veh/h	964	1618	163	917	1841	1558	372	573	525	1307	299	1281
Grp Volume(v), veh/h	83	0	459	18	286	101	84	0	0	95	0	95
Grp Sat Flow(s),veh/h/ln	964	0	1782	917	1841	1558	1469	0	0	1307	0	1580
Q Serve(g_s), s	1.5	0.0	4.6	0.4	2.4	0.9	0.0	0.0	0.0	0.0	0.0	1.2
Cycle Q Clear(g_c), s	3.9	0.0	4.6	4.9	2.4	0.9	1.2	0.0	0.0	1.1	0.0	1.2
Prop In Lane	1.00		0.09	1.00		1.00	0.36		0.36	1.00		0.81
Lane Grp Cap(c), veh/h	626	0	766	525	791	670	476	0	0	569	0	284
V/C Ratio(X)	0.13	0.00	0.60	0.03	0.36	0.15	0.18	0.00	0.00	0.17	0.00	0.33
Avail Cap(c_a), veh/h	1279	0	1972	1146	2037	1725	1840	0	0	1782	0	1749
HCM Platoon Ratio	1.00	1.00	1.00	1.00	1.00	1.00	1.00	1.00	1.00	1.00	1.00	1.00
Upstream Filter(I)	1.00	0.00	1.00	1.00	1.00	1.00	1.00	0.00	0.00	1.00	0.00	1.00
Uniform Delay (d), s/veh	5.7	0.0	5.0	6.9	4.4	4.0	8.2	0.0	0.0	8.2	0.0	8.3
Incr Delay (d2), s/veh	0.1	0.0	0.8	0.0	0.3	0.1	0.2	0.0	0.0	0.1	0.0	0.7
Initial Q Delay(d3),s/veh	0.0	0.0	0.0	0.0	0.0	0.0	0.0	0.0	0.0	0.0	0.0	0.0
%ile BackOfQ(95%),veh/ln	0.3	0.0	1.1	0.1	0.4	0.1	0.5	0.0	0.0	0.5	0.0	0.6
Unsig. Movement Delay, s/veh												
LnGrp Delay(d),s/veh	5.8	0.0	5.8	7.0	4.7	4.1	8.3	0.0	0.0	8.3	0.0	8.9
LnGrp LOS	A	A	A	A	A	A	A	A	A	A	A	A
Approach Vol, veh/h		542			405			84			190	
Approach Delay, s/veh		5.8			4.7			8.3			8.6	
Approach LOS		A			A			A			A	

Timer - Assigned Phs		2		4		6		8				
Phs Duration (G+Y+Rc), s		8.6		14.4		8.6		14.4				
Change Period (Y+Rc), s		4.5		4.5		4.5		4.5				
Max Green Setting (Gmax), s		25.5		25.5		25.5		25.5				
Max Q Clear Time (g_c+I1), s		3.2		6.6		3.2		6.9				
Green Ext Time (p_c), s		0.4		3.3		0.8		1.9				

Intersection Summary		
HCM 6th Ctrl Delay		6.0
HCM 6th LOS		A

HCM 6th Signalized Intersection Summary
1: Jackson Dr & WIS-60

05/19/2020

Movement	EBL	EBT	EBR	WBL	WBT	WBR	NBL	NBT	NBR	SBL	SBT	SBR
Lane Configurations												
Traffic Volume (veh/h)	175	405	120	15	330	55	70	75	15	40	60	105
Future Volume (veh/h)	175	405	120	15	330	55	70	75	15	40	60	105
Initial Q (Qb), veh	0	0	0	0	0	0	0	0	0	0	0	0
Ped-Bike Adj(A_pbT)	1.00		0.98	1.00		0.98	0.99		0.99	0.99		0.97
Parking Bus, Adj	1.00	1.00	1.00	1.00	1.00	1.00	1.00	1.00	1.00	1.00	1.00	1.00
Work Zone On Approach		No			No			No			No	
Adj Sat Flow, veh/h/ln	1856	1646	1646	1841	1841	1841	1856	1646	1646	1885	1672	1672
Adj Flow Rate, veh/h	188	435	129	16	355	59	75	81	16	43	65	113
Peak Hour Factor	0.93	0.93	0.93	0.93	0.93	0.93	0.93	0.93	0.93	0.93	0.93	0.93
Percent Heavy Veh, %	3	3	3	4	4	4	3	3	3	1	1	1
Cap, veh/h	592	696	206	73	492	80	261	296	59	348	119	207
Arrive On Green	0.13	0.57	0.57	0.33	0.33	0.33	0.22	0.22	0.22	0.22	0.22	0.22
Sat Flow, veh/h	1767	1212	359	26	1491	241	1190	1332	263	1300	537	933
Grp Volume(v), veh/h	188	0	564	430	0	0	75	0	97	43	0	178
Grp Sat Flow(s),veh/h/ln	1767	0	1572	1759	0	0	1190	0	1595	1300	0	1469
Q Serve(g_s), s	3.5	0.0	13.8	1.1	0.0	0.0	3.4	0.0	2.9	1.6	0.0	6.2
Cycle Q Clear(g_c), s	3.5	0.0	13.8	12.3	0.0	0.0	9.7	0.0	2.9	4.6	0.0	6.2
Prop In Lane	1.00		0.23	0.04		0.14	1.00		0.16	1.00		0.63
Lane Grp Cap(c), veh/h	592	0	902	645	0	0	261	0	355	348	0	327
V/C Ratio(X)	0.32	0.00	0.63	0.67	0.00	0.00	0.29	0.00	0.27	0.12	0.00	0.54
Avail Cap(c_a), veh/h	1122	0	2076	1412	0	0	716	0	964	844	0	888
HCM Platoon Ratio	1.00	1.00	1.00	1.00	1.00	1.00	1.00	1.00	1.00	1.00	1.00	1.00
Upstream Filter(I)	1.00	0.00	1.00	1.00	0.00	0.00	1.00	0.00	1.00	1.00	0.00	1.00
Uniform Delay (d), s/veh	8.2	0.0	8.2	17.1	0.0	0.0	24.2	0.0	18.6	20.5	0.0	19.9
Incr Delay (d2), s/veh	0.1	0.0	1.1	1.8	0.0	0.0	0.2	0.0	0.2	0.1	0.0	0.5
Initial Q Delay(d3),s/veh	0.0	0.0	0.0	0.0	0.0	0.0	0.0	0.0	0.0	0.0	0.0	0.0
%ile BackOfQ(95%),veh/ln	2.1	0.0	7.1	8.5	0.0	0.0	1.7	0.0	1.9	0.9	0.0	3.7
Unsig. Movement Delay, s/veh												
LnGrp Delay(d),s/veh	8.3	0.0	9.3	18.9	0.0	0.0	24.4	0.0	18.8	20.6	0.0	20.4
LnGrp LOS	A	A	A	B	A	A	C	A	B	C	A	C
Approach Vol, veh/h		752			430			172			221	
Approach Delay, s/veh		9.0			18.9			21.2			20.5	
Approach LOS		A			B			C			C	

Timer - Assigned Phs	1	2		4		6		8				
Phs Duration (G+Y+Rc), s	14.1	24.4		19.4		38.5		19.4				
Change Period (Y+Rc), s	6.5	* 5.3		6.5		* 5.3		6.5				
Max Green Setting (Gmax), s	25.0	* 45		35.0		* 77		35.0				
Max Q Clear Time (g_c+I1), s	5.5	14.3		11.7		15.8		8.2				
Green Ext Time (p_c), s	0.2	4.7		0.4		7.5		0.6				

Intersection Summary												
HCM 6th Ctrl Delay			14.7									
HCM 6th LOS			B									

Notes

* HCM 6th computational engine requires equal clearance times for the phases crossing the barrier.

Intersection	
Int Delay, s/veh	0.3

Movement	EBL	EBT	WBT	WBR	SBL	SBR
Lane Configurations		↑	↑		⋔	
Traffic Vol, veh/h	5	455	395	0	10	5
Future Vol, veh/h	5	455	395	0	10	5
Conflicting Peds, #/hr	0	0	0	0	0	0
Sign Control	Free	Free	Free	Free	Stop	Stop
RT Channelized	-	None	-	None	-	None
Storage Length	-	-	-	-	0	-
Veh in Median Storage, #	-	0	0	-	0	-
Grade, %	-	0	0	-	0	-
Peak Hour Factor	92	92	92	92	92	92
Heavy Vehicles, %	3	3	4	4	2	2
Mvmt Flow	5	495	429	0	11	5

Major/Minor	Major1		Major2		Minor2	
Conflicting Flow All	429	0	-	0	934	429
Stage 1	-	-	-	-	429	-
Stage 2	-	-	-	-	505	-
Critical Hdwy	4.13	-	-	-	6.42	6.22
Critical Hdwy Stg 1	-	-	-	-	5.42	-
Critical Hdwy Stg 2	-	-	-	-	5.42	-
Follow-up Hdwy	2.227	-	-	-	3.518	3.318
Pot Cap-1 Maneuver	1125	-	-	0	295	626
Stage 1	-	-	-	0	657	-
Stage 2	-	-	-	0	606	-
Platoon blocked, %		-	-			
Mov Cap-1 Maneuver	1125	-	-	-	293	626
Mov Cap-2 Maneuver	-	-	-	-	293	-
Stage 1	-	-	-	-	653	-
Stage 2	-	-	-	-	606	-

Approach	EB	WB	SB
HCM Control Delay, s	0.1	0	15.6
HCM LOS			C

Minor Lane/Major Mvmt	EBL	EBT	WBT	SBLn1
Capacity (veh/h)	1125	-	-	356
HCM Lane V/C Ratio	0.005	-	-	0.046
HCM Control Delay (s)	8.2	-	-	15.6
HCM Lane LOS	A	-	-	C
HCM 95th %tile Q(veh)	0	-	-	0.1

Intersection	
Int Delay, s/veh	1.6

Movement	EBL	EBT	EBR	WBL	WBT	WBR	NBL	NBT	NBR	SBL	SBT	SBR
Lane Configurations												
Traffic Vol, veh/h	50	410	5	0	370	45	15	0	5	20	0	10
Future Vol, veh/h	50	410	5	0	370	45	15	0	5	20	0	10
Conflicting Peds, #/hr	1	0	0	0	0	1	0	0	0	0	0	0
Sign Control	Free	Free	Free	Free	Free	Free	Stop	Stop	Stop	Stop	Stop	Stop
RT Channelized	-	-	None	-	-	None	-	-	None	-	-	None
Storage Length	-	-	-	-	-	-	-	-	-	-	-	-
Veh in Median Storage, #	-	0	-	-	0	-	-	0	-	-	0	-
Grade, %	-	0	-	-	0	-	-	0	-	-	0	-
Peak Hour Factor	87	87	87	87	87	87	87	87	87	87	87	87
Heavy Vehicles, %	3	3	3	4	4	4	2	2	2	1	1	1
Mvmt Flow	57	471	6	0	425	52	17	0	6	23	0	11

Major/Minor	Major1			Major2			Minor1			Minor2		
Conflicting Flow All	478	0	0	477	0	0	1045	1066	474	1043	1043	452
Stage 1	-	-	-	-	-	-	588	588	-	452	452	-
Stage 2	-	-	-	-	-	-	457	478	-	591	591	-
Critical Hdwy	4.13	-	-	4.14	-	-	7.12	6.52	6.22	7.11	6.51	6.21
Critical Hdwy Stg 1	-	-	-	-	-	-	6.12	5.52	-	6.11	5.51	-
Critical Hdwy Stg 2	-	-	-	-	-	-	6.12	5.52	-	6.11	5.51	-
Follow-up Hdwy	2.227	-	-	2.236	-	-	3.518	4.018	3.318	3.509	4.009	3.309
Pot Cap-1 Maneuver	1079	-	-	1075	-	-	207	222	590	208	230	610
Stage 1	-	-	-	-	-	-	495	496	-	589	572	-
Stage 2	-	-	-	-	-	-	583	556	-	495	496	-
Platoon blocked, %		-	-		-	-						
Mov Cap-1 Maneuver	1078	-	-	1075	-	-	192	206	590	194	213	609
Mov Cap-2 Maneuver	-	-	-	-	-	-	192	206	-	194	213	-
Stage 1	-	-	-	-	-	-	459	460	-	546	571	-
Stage 2	-	-	-	-	-	-	572	555	-	455	460	-

Approach	EB	WB	NB	SB
HCM Control Delay, s	0.9	0	22.3	21.6
HCM LOS			C	C

Minor Lane/Major Mvmt	NBLn1	EBL	EBT	EBR	WBL	WBT	WBR	SBLn1
Capacity (veh/h)	231	1078	-	-	1075	-	-	251
HCM Lane V/C Ratio	0.1	0.053	-	-	-	-	-	0.137
HCM Control Delay (s)	22.3	8.5	0	-	0	-	-	21.6
HCM Lane LOS	C	A	A	-	A	-	-	C
HCM 95th %tile Q(veh)	0.3	0.2	-	-	0	-	-	0.5

Intersection	
Int Delay, s/veh	0

Movement	EBL	EBT	WBT	WBR	SBL	SBR
Lane Configurations		↑	↑		⋔	
Traffic Vol, veh/h	0	435	415	0	0	0
Future Vol, veh/h	0	435	415	0	0	0
Conflicting Peds, #/hr	0	0	0	0	0	0
Sign Control	Free	Free	Free	Free	Stop	Stop
RT Channelized	-	None	-	None	-	None
Storage Length	-	-	-	-	0	-
Veh in Median Storage, #	-	0	0	-	0	-
Grade, %	-	0	0	-	0	-
Peak Hour Factor	92	92	92	92	92	92
Heavy Vehicles, %	2	2	4	4	2	2
Mvmt Flow	0	473	451	0	0	0

Major/Minor	Major1		Major2		Minor2	
Conflicting Flow All	-	0	-	0	924	451
Stage 1	-	-	-	-	451	-
Stage 2	-	-	-	-	473	-
Critical Hdwy	-	-	-	-	6.42	6.22
Critical Hdwy Stg 1	-	-	-	-	5.42	-
Critical Hdwy Stg 2	-	-	-	-	5.42	-
Follow-up Hdwy	-	-	-	-	3.518	3.318
Pot Cap-1 Maneuver	0	-	-	0	299	608
Stage 1	0	-	-	0	642	-
Stage 2	0	-	-	0	627	-
Platoon blocked, %		-	-			
Mov Cap-1 Maneuver	-	-	-	-	299	608
Mov Cap-2 Maneuver	-	-	-	-	299	-
Stage 1	-	-	-	-	642	-
Stage 2	-	-	-	-	627	-

Approach	EB	WB	SB
HCM Control Delay, s	0	0	0
HCM LOS			A

Minor Lane/Major Mvmt	EBT	WBT	SBLn1
Capacity (veh/h)	-	-	-
HCM Lane V/C Ratio	-	-	-
HCM Control Delay (s)	-	-	0
HCM Lane LOS	-	-	A
HCM 95th %tile Q(veh)	-	-	-

Intersection	
Int Delay, s/veh	0

Movement	EBT	EBR	WBL	WBT	NBL	NBR
Lane Configurations	↑			↑	⋔	
Traffic Vol, veh/h	435	0	0	415	0	0
Future Vol, veh/h	435	0	0	415	0	0
Conflicting Peds, #/hr	0	0	0	0	0	0
Sign Control	Free	Free	Free	Free	Stop	Stop
RT Channelized	-	None	-	None	-	None
Storage Length	-	-	-	-	0	-
Veh in Median Storage, #	0	-	-	0	0	-
Grade, %	0	-	-	0	0	-
Peak Hour Factor	92	92	92	92	92	92
Heavy Vehicles, %	2	2	4	4	2	2
Mvmt Flow	473	0	0	451	0	0

Major/Minor	Major1		Major2		Minor1	
Conflicting Flow All	0	-	-	-	924	473
Stage 1	-	-	-	-	473	-
Stage 2	-	-	-	-	451	-
Critical Hdwy	-	-	-	-	6.42	6.22
Critical Hdwy Stg 1	-	-	-	-	5.42	-
Critical Hdwy Stg 2	-	-	-	-	5.42	-
Follow-up Hdwy	-	-	-	-	3.518	3.318
Pot Cap-1 Maneuver	-	0	0	-	299	591
Stage 1	-	0	0	-	627	-
Stage 2	-	0	0	-	642	-
Platoon blocked, %	-			-		
Mov Cap-1 Maneuver	-	-	-	-	299	591
Mov Cap-2 Maneuver	-	-	-	-	299	-
Stage 1	-	-	-	-	627	-
Stage 2	-	-	-	-	642	-

Approach	EB	WB	NB
HCM Control Delay, s	0	0	0
HCM LOS			A

Minor Lane/Major Mvmt	NBLn1	EBT	WBT
Capacity (veh/h)	-	-	-
HCM Lane V/C Ratio	-	-	-
HCM Control Delay (s)	0	-	-
HCM Lane LOS	A	-	-
HCM 95th %tile Q(veh)	-	-	-

Movement	EBL	EBT	EBR	WBL	WBT	WBR	NBL	NBT	NBR	SBL	SBT	SBR
Lane Configurations												
Traffic Volume (veh/h)	55	280	100	35	310	80	50	40	20	55	35	55
Future Volume (veh/h)	55	280	100	35	310	80	50	40	20	55	35	55
Initial Q (Qb), veh	0	0	0	0	0	0	0	0	0	0	0	0
Ped-Bike Adj(A_pbT)	1.00		1.00	1.00		0.98	1.00		0.98	1.00		1.00
Parking Bus, Adj	1.00	1.00	1.00	1.00	1.00	1.00	1.00	1.00	1.00	1.00	1.00	1.00
Work Zone On Approach		No			No			No			No	
Adj Sat Flow, veh/h/ln	1870	1870	1870	1870	1870	1870	1885	1885	1885	1885	1885	1885
Adj Flow Rate, veh/h	67	341	122	43	378	98	61	49	24	67	43	67
Peak Hour Factor	0.82	0.82	0.82	0.82	0.82	0.82	0.82	0.82	0.82	0.82	0.82	0.82
Percent Heavy Veh, %	2	2	2	2	2	2	1	1	1	1	1	1
Cap, veh/h	569	567	203	521	807	670	312	118	46	601	124	194
Arrive On Green	0.43	0.43	0.43	0.43	0.43	0.43	0.19	0.19	0.19	0.19	0.19	0.19
Sat Flow, veh/h	918	1315	471	929	1870	1552	482	632	243	1338	664	1035
Grp Volume(v), veh/h	67	0	463	43	378	98	134	0	0	67	0	110
Grp Sat Flow(s),veh/h/ln	918	0	1786	929	1870	1552	1358	0	0	1338	0	1699
Q Serve(g_s), s	1.3	0.0	4.7	0.9	3.4	0.9	1.0	0.0	0.0	0.0	0.0	1.3
Cycle Q Clear(g_c), s	4.7	0.0	4.7	5.6	3.4	0.9	2.4	0.0	0.0	0.7	0.0	1.3
Prop In Lane	1.00		0.26	1.00		1.00	0.46		0.18	1.00		0.61
Lane Grp Cap(c), veh/h	569	0	770	521	807	670	476	0	0	601	0	318
V/C Ratio(X)	0.12	0.00	0.60	0.08	0.47	0.15	0.28	0.00	0.00	0.11	0.00	0.35
Avail Cap(c_a), veh/h	1165	0	1929	1124	2021	1677	1828	0	0	1796	0	1835
HCM Platoon Ratio	1.00	1.00	1.00	1.00	1.00	1.00	1.00	1.00	1.00	1.00	1.00	1.00
Upstream Filter(I)	1.00	0.00	1.00	1.00	1.00	1.00	1.00	0.00	0.00	1.00	0.00	1.00
Uniform Delay (d), s/veh	6.5	0.0	5.2	7.3	4.8	4.1	8.7	0.0	0.0	8.1	0.0	8.3
Incr Delay (d2), s/veh	0.1	0.0	0.8	0.1	0.4	0.1	0.3	0.0	0.0	0.1	0.0	0.6
Initial Q Delay(d3),s/veh	0.0	0.0	0.0	0.0	0.0	0.0	0.0	0.0	0.0	0.0	0.0	0.0
%ile BackOfQ(95%),veh/ln	0.3	0.0	1.2	0.2	0.7	0.2	0.8	0.0	0.0	0.4	0.0	0.7
Unsig. Movement Delay, s/veh												
LnGrp Delay(d),s/veh	6.6	0.0	5.9	7.4	5.2	4.2	9.1	0.0	0.0	8.2	0.0	9.0
LnGrp LOS	A	A	A	A	A	A	A	A	A	A	A	A
Approach Vol, veh/h		530			519			134			177	
Approach Delay, s/veh		6.0			5.2			9.1			8.7	
Approach LOS		A			A			A			A	

Timer - Assigned Phs	2	4	6	8
Phs Duration (G+Y+Rc), s	8.9	14.7	8.9	14.7
Change Period (Y+Rc), s	4.5	4.5	4.5	4.5
Max Green Setting (Gmax), s	25.5	25.5	25.5	25.5
Max Q Clear Time (g_c+I1), s	4.4	6.7	3.3	7.6
Green Ext Time (p_c), s	0.7	3.3	0.8	2.6

Intersection Summary	
HCM 6th Ctrl Delay	6.3
HCM 6th LOS	A

Notes

User approved pedestrian interval to be less than phase max green.

HCM 6th Signalized Intersection Summary
1: Jackson Dr & WIS-60

05/19/2020

Movement	EBL	EBT	EBR	WBL	WBT	WBR	NBL	NBT	NBR	SBL	SBT	SBR
Lane Configurations												
Traffic Volume (veh/h)	65	320	80	15	345	35	90	40	15	25	30	80
Future Volume (veh/h)	65	320	80	15	345	35	90	40	15	25	30	80
Initial Q (Qb), veh	0	0	0	0	0	0	0	0	0	0	0	0
Ped-Bike Adj(A_pbT)	1.00		1.00	1.00		1.00	1.00		1.00	1.00		1.00
Parking Bus, Adj	1.00	1.00	1.00	1.00	1.00	1.00	1.00	1.00	1.00	1.00	1.00	1.00
Work Zone On Approach		No			No			No			No	
Adj Sat Flow, veh/h/ln	1870	1659	1659	1870	1870	1870	1885	1672	1672	1870	1659	1659
Adj Flow Rate, veh/h	66	327	82	15	352	36	92	41	15	26	31	82
Peak Hour Factor	0.98	0.98	0.98	0.98	0.98	0.98	0.98	0.98	0.98	0.98	0.98	0.98
Percent Heavy Veh, %	2	2	2	2	2	2	1	1	1	2	2	2
Cap, veh/h	601	712	179	85	531	53	321	235	86	379	81	214
Arrive On Green	0.10	0.56	0.56	0.33	0.33	0.33	0.20	0.20	0.20	0.20	0.20	0.20
Sat Flow, veh/h	1781	1279	321	26	1628	162	1290	1168	427	1348	402	1065
Grp Volume(v), veh/h	66	0	409	403	0	0	92	0	56	26	0	113
Grp Sat Flow(s),veh/h/ln	1781	0	1600	1816	0	0	1290	0	1595	1348	0	1467
Q Serve(g_s), s	1.0	0.0	7.4	0.0	0.0	0.0	3.2	0.0	1.4	0.8	0.0	3.2
Cycle Q Clear(g_c), s	1.0	0.0	7.4	9.2	0.0	0.0	6.5	0.0	1.4	2.2	0.0	3.2
Prop In Lane	1.00		0.20	0.04		0.09	1.00		0.27	1.00		0.73
Lane Grp Cap(c), veh/h	601	0	891	669	0	0	321	0	321	379	0	295
V/C Ratio(X)	0.11	0.00	0.46	0.60	0.00	0.00	0.29	0.00	0.17	0.07	0.00	0.38
Avail Cap(c_a), veh/h	1342	0	2512	1732	0	0	988	0	1146	1077	0	1054
HCM Platoon Ratio	1.00	1.00	1.00	1.00	1.00	1.00	1.00	1.00	1.00	1.00	1.00	1.00
Upstream Filter(I)	1.00	0.00	1.00	1.00	0.00	0.00	1.00	0.00	1.00	1.00	0.00	1.00
Uniform Delay (d), s/veh	7.3	0.0	6.4	14.2	0.0	0.0	19.7	0.0	16.1	17.0	0.0	16.8
Incr Delay (d2), s/veh	0.0	0.0	0.5	1.3	0.0	0.0	0.2	0.0	0.1	0.0	0.0	0.3
Initial Q Delay(d3),s/veh	0.0	0.0	0.0	0.0	0.0	0.0	0.0	0.0	0.0	0.0	0.0	0.0
%ile BackOfQ(95%),veh/ln	0.6	0.0	3.5	6.4	0.0	0.0	1.6	0.0	0.9	0.4	0.0	1.8
Unsig. Movement Delay, s/veh												
LnGrp Delay(d),s/veh	7.3	0.0	7.0	15.4	0.0	0.0	19.8	0.0	16.2	17.1	0.0	17.2
LnGrp LOS	A	A	A	B	A	A	B	A	B	B	A	B
Approach Vol, veh/h		475			403			148			139	
Approach Delay, s/veh		7.0			15.4			18.5			17.1	
Approach LOS		A			B			B			B	

Timer - Assigned Phs	1	2		4		6		8
Phs Duration (G+Y+Rc), s	11.2	21.2		16.3		32.4		16.3
Change Period (Y+Rc), s	6.5	* 5.3		6.5		* 5.3		6.5
Max Green Setting (Gmax), s	25.0	* 45		35.0		* 77		35.0
Max Q Clear Time (g_c+I1), s	3.0	11.2		8.5		9.4		5.2
Green Ext Time (p_c), s	0.0	4.4		0.2		4.8		0.4

Intersection Summary	
HCM 6th Ctrl Delay	12.6
HCM 6th LOS	B

Notes

* HCM 6th computational engine requires equal clearance times for the phases crossing the barrier.

Intersection	
Int Delay, s/veh	0

Movement	EBL	EBT	WBT	WBR	SBL	SBR
Lane Configurations		↑	↑		⋔	
Traffic Vol, veh/h	0	360	395	0	0	0
Future Vol, veh/h	0	360	395	0	0	0
Conflicting Peds, #/hr	0	0	0	0	0	0
Sign Control	Free	Free	Free	Free	Stop	Stop
RT Channelized	-	None	-	None	-	None
Storage Length	-	-	-	-	0	-
Veh in Median Storage, #	-	0	0	-	0	-
Grade, %	-	0	0	-	0	-
Peak Hour Factor	92	92	92	92	92	92
Heavy Vehicles, %	3	3	2	2	2	2
Mvmt Flow	0	391	429	0	0	0

Major/Minor	Major1		Major2		Minor2	
Conflicting Flow All	-	0	-	0	820	429
Stage 1	-	-	-	-	429	-
Stage 2	-	-	-	-	391	-
Critical Hdwy	-	-	-	-	6.42	6.22
Critical Hdwy Stg 1	-	-	-	-	5.42	-
Critical Hdwy Stg 2	-	-	-	-	5.42	-
Follow-up Hdwy	-	-	-	-	3.518	3.318
Pot Cap-1 Maneuver	0	-	-	0	345	626
Stage 1	0	-	-	0	657	-
Stage 2	0	-	-	0	683	-
Platoon blocked, %		-	-			
Mov Cap-1 Maneuver	-	-	-	-	345	626
Mov Cap-2 Maneuver	-	-	-	-	345	-
Stage 1	-	-	-	-	657	-
Stage 2	-	-	-	-	683	-

Approach	EB	WB	SB
HCM Control Delay, s	0	0	0
HCM LOS			A

Minor Lane/Major Mvmt	EBT	WBT	SBLn1
Capacity (veh/h)	-	-	-
HCM Lane V/C Ratio	-	-	-
HCM Control Delay (s)	-	-	0
HCM Lane LOS	-	-	A
HCM 95th %tile Q(veh)	-	-	-

Intersection	
Int Delay, s/veh	1.2

Movement	EBL	EBT	EBR	WBL	WBT	WBR	NBL	NBT	NBR	SBL	SBT	SBR
Lane Configurations												
Traffic Vol, veh/h	20	335	5	0	360	20	0	0	0	20	0	35
Future Vol, veh/h	20	335	5	0	360	20	0	0	0	20	0	35
Conflicting Peds, #/hr	1	0	0	0	0	1	0	0	0	0	0	0
Sign Control	Free	Free	Free	Free	Free	Free	Stop	Stop	Stop	Stop	Stop	Stop
RT Channelized	-	-	None	-	-	None	-	-	None	-	-	None
Storage Length	-	-	-	-	-	-	-	-	-	-	-	-
Veh in Median Storage, #	-	0	-	-	0	-	-	0	-	-	0	-
Grade, %	-	0	-	-	0	-	-	0	-	-	0	-
Peak Hour Factor	94	94	94	94	94	94	94	94	94	94	94	94
Heavy Vehicles, %	3	3	3	3	3	3	2	2	2	2	2	2
Mvmt Flow	21	356	5	0	383	21	0	0	0	21	0	37

Major/Minor	Major1			Major2			Minor1			Minor2		
Conflicting Flow All	405	0	0	361	0	0	813	806	359	796	798	395
Stage 1	-	-	-	-	-	-	401	401	-	395	395	-
Stage 2	-	-	-	-	-	-	412	405	-	401	403	-
Critical Hdwy	4.13	-	-	4.13	-	-	7.12	6.52	6.22	7.12	6.52	6.22
Critical Hdwy Stg 1	-	-	-	-	-	-	6.12	5.52	-	6.12	5.52	-
Critical Hdwy Stg 2	-	-	-	-	-	-	6.12	5.52	-	6.12	5.52	-
Follow-up Hdwy	2.227	-	-	2.227	-	-	3.518	4.018	3.318	3.518	4.018	3.318
Pot Cap-1 Maneuver	1148	-	-	1192	-	-	297	316	685	305	319	654
Stage 1	-	-	-	-	-	-	626	601	-	630	605	-
Stage 2	-	-	-	-	-	-	617	598	-	626	600	-
Platoon blocked, %		-	-		-	-						
Mov Cap-1 Maneuver	1147	-	-	1192	-	-	275	308	685	300	311	653
Mov Cap-2 Maneuver	-	-	-	-	-	-	275	308	-	300	311	-
Stage 1	-	-	-	-	-	-	612	587	-	615	604	-
Stage 2	-	-	-	-	-	-	582	597	-	612	586	-

Approach	EB	WB	NB	SB
HCM Control Delay, s	0.5	0	0	14
HCM LOS			A	B

Minor Lane/Major Mvmt	NBLn1	EBL	EBT	EBR	WBL	WBT	WBR	SBLn1
Capacity (veh/h)	-	1147	-	-	1192	-	-	457
HCM Lane V/C Ratio	-	0.019	-	-	-	-	-	0.128
HCM Control Delay (s)	0	8.2	0	-	0	-	-	14
HCM Lane LOS	A	A	A	-	A	-	-	B
HCM 95th %tile Q(veh)	-	0.1	-	-	0	-	-	0.4

Intersection	
Int Delay, s/veh	0

Movement	EBL	EBT	WBT	WBR	SBL	SBR
Lane Configurations		↑	↑		⋔	
Traffic Vol, veh/h	0	355	380	0	0	0
Future Vol, veh/h	0	355	380	0	0	0
Conflicting Peds, #/hr	0	0	0	0	0	0
Sign Control	Free	Free	Free	Free	Stop	Stop
RT Channelized	-	None	-	None	-	None
Storage Length	-	-	-	-	0	-
Veh in Median Storage, #	-	0	0	-	0	-
Grade, %	-	0	0	-	0	-
Peak Hour Factor	92	92	92	92	92	92
Heavy Vehicles, %	2	2	3	3	2	2
Mvmt Flow	0	386	413	0	0	0

Major/Minor	Major1		Major2		Minor2	
Conflicting Flow All	-	0	-	0	799	413
Stage 1	-	-	-	-	413	-
Stage 2	-	-	-	-	386	-
Critical Hdwy	-	-	-	-	6.42	6.22
Critical Hdwy Stg 1	-	-	-	-	5.42	-
Critical Hdwy Stg 2	-	-	-	-	5.42	-
Follow-up Hdwy	-	-	-	-	3.518	3.318
Pot Cap-1 Maneuver	0	-	-	0	355	639
Stage 1	0	-	-	0	668	-
Stage 2	0	-	-	0	687	-
Platoon blocked, %		-	-			
Mov Cap-1 Maneuver	-	-	-	-	355	639
Mov Cap-2 Maneuver	-	-	-	-	355	-
Stage 1	-	-	-	-	668	-
Stage 2	-	-	-	-	687	-

Approach	EB	WB	SB
HCM Control Delay, s	0	0	0
HCM LOS			A

Minor Lane/Major Mvmt	EBT	WBT	SBLn1
Capacity (veh/h)	-	-	-
HCM Lane V/C Ratio	-	-	-
HCM Control Delay (s)	-	-	0
HCM Lane LOS	-	-	A
HCM 95th %tile Q(veh)	-	-	-

Intersection	
Int Delay, s/veh	0

Movement	EBT	EBR	WBL	WBT	NBL	NBR
Lane Configurations	↑			↑	⋔	
Traffic Vol, veh/h	355	0	0	380	0	0
Future Vol, veh/h	355	0	0	380	0	0
Conflicting Peds, #/hr	0	0	0	0	0	0
Sign Control	Free	Free	Free	Free	Stop	Stop
RT Channelized	-	None	-	None	-	None
Storage Length	-	-	-	-	0	-
Veh in Median Storage, #	0	-	-	0	0	-
Grade, %	0	-	-	0	0	-
Peak Hour Factor	92	92	92	92	92	92
Heavy Vehicles, %	2	2	3	3	2	2
Mvmt Flow	386	0	0	413	0	0

Major/Minor	Major1		Major2		Minor1	
Conflicting Flow All	0	-	-	-	799	386
Stage 1	-	-	-	-	386	-
Stage 2	-	-	-	-	413	-
Critical Hdwy	-	-	-	-	6.42	6.22
Critical Hdwy Stg 1	-	-	-	-	5.42	-
Critical Hdwy Stg 2	-	-	-	-	5.42	-
Follow-up Hdwy	-	-	-	-	3.518	3.318
Pot Cap-1 Maneuver	-	0	0	-	355	662
Stage 1	-	0	0	-	687	-
Stage 2	-	0	0	-	668	-
Platoon blocked, %	-			-		
Mov Cap-1 Maneuver	-	-	-	-	355	662
Mov Cap-2 Maneuver	-	-	-	-	355	-
Stage 1	-	-	-	-	687	-
Stage 2	-	-	-	-	668	-

Approach	EB	WB	NB
HCM Control Delay, s	0	0	0
HCM LOS			A

Minor Lane/Major Mvmt	NBLn1	EBT	WBT
Capacity (veh/h)	-	-	-
HCM Lane V/C Ratio	-	-	-
HCM Control Delay (s)	0	-	-
HCM Lane LOS	A	-	-
HCM 95th %tile Q(veh)	-	-	-

Movement	EBL	EBT	EBR	WBL	WBT	WBR	NBL	NBT	NBR	SBL	SBT	SBR
Lane Configurations												
Traffic Volume (veh/h)	50	235	70	20	255	40	50	25	10	55	30	75
Future Volume (veh/h)	50	235	70	20	255	40	50	25	10	55	30	75
Initial Q (Qb), veh	0	0	0	0	0	0	0	0	0	0	0	0
Ped-Bike Adj(A_pbT)	1.00		1.00	1.00		1.00	1.00		1.00	1.00		1.00
Parking Bus, Adj	1.00	1.00	1.00	1.00	1.00	1.00	1.00	1.00	1.00	1.00	1.00	1.00
Work Zone On Approach		No			No			No			No	
Adj Sat Flow, veh/h/ln	1870	1870	1870	1856	1856	1856	1870	1870	1870	1885	1885	1885
Adj Flow Rate, veh/h	54	255	76	22	277	43	54	27	11	60	33	82
Peak Hour Factor	0.92	0.92	0.92	0.92	0.92	0.92	0.92	0.92	0.92	0.92	0.92	0.92
Percent Heavy Veh, %	2	2	2	3	3	3	2	2	2	1	1	1
Cap, veh/h	621	500	149	583	670	568	396	103	29	656	92	229
Arrive On Green	0.36	0.36	0.36	0.36	0.36	0.36	0.19	0.19	0.19	0.19	0.19	0.19
Sat Flow, veh/h	1060	1384	412	1041	1856	1572	585	536	152	1381	479	1191
Grp Volume(v), veh/h	54	0	331	22	277	43	92	0	0	60	0	115
Grp Sat Flow(s),veh/h/ln	1060	0	1796	1041	1856	1572	1274	0	0	1381	0	1671
Q Serve(g_s), s	0.8	0.0	2.9	0.3	2.3	0.4	0.4	0.0	0.0	0.0	0.0	1.2
Cycle Q Clear(g_c), s	3.1	0.0	2.9	3.3	2.3	0.4	1.6	0.0	0.0	0.6	0.0	1.2
Prop In Lane	1.00		0.23	1.00		1.00	0.59		0.12	1.00		0.71
Lane Grp Cap(c), veh/h	621	0	649	583	670	568	528	0	0	656	0	321
V/C Ratio(X)	0.09	0.00	0.51	0.04	0.41	0.08	0.17	0.00	0.00	0.09	0.00	0.36
Avail Cap(c_a), veh/h	1578	0	2271	1523	2346	1988	2078	0	0	2136	0	2113
HCM Platoon Ratio	1.00	1.00	1.00	1.00	1.00	1.00	1.00	1.00	1.00	1.00	1.00	1.00
Upstream Filter(I)	1.00	0.00	1.00	1.00	1.00	1.00	1.00	0.00	0.00	1.00	0.00	1.00
Uniform Delay (d), s/veh	6.0	0.0	5.0	6.3	4.8	4.2	7.1	0.0	0.0	6.8	0.0	7.1
Incr Delay (d2), s/veh	0.1	0.0	0.6	0.0	0.4	0.1	0.2	0.0	0.0	0.1	0.0	0.7
Initial Q Delay(d3),s/veh	0.0	0.0	0.0	0.0	0.0	0.0	0.0	0.0	0.0	0.0	0.0	0.0
%ile BackOfQ(95%),veh/ln	0.2	0.0	0.7	0.1	0.4	0.1	0.4	0.0	0.0	0.2	0.0	0.5
Unsig. Movement Delay, s/veh												
LnGrp Delay(d),s/veh	6.0	0.0	5.7	6.3	5.2	4.3	7.3	0.0	0.0	6.9	0.0	7.7
LnGrp LOS	A	A	A	A	A	A	A	A	A	A	A	A
Approach Vol, veh/h		385			342			92			175	
Approach Delay, s/veh		5.7			5.2			7.3			7.4	
Approach LOS		A			A			A			A	

Timer - Assigned Phs	2	4	6	8
Phs Duration (G+Y+Rc), s	8.4	11.8	8.4	11.8
Change Period (Y+Rc), s	4.5	4.5	4.5	4.5
Max Green Setting (Gmax), s	25.5	25.5	25.5	25.5
Max Q Clear Time (g_c+I1), s	3.6	5.1	3.2	5.3
Green Ext Time (p_c), s	0.5	2.2	0.8	1.7

Intersection Summary	
HCM 6th Ctrl Delay	6.0
HCM 6th LOS	A

HCM 6th Signalized Intersection Summary
1: Jackson Dr & WIS-60

05/19/2020

Movement	EBL	EBT	EBR	WBL	WBT	WBR	NBL	NBT	NBR	SBL	SBT	SBR
Lane Configurations												
Traffic Volume (veh/h)	70	355	30	15	370	30	115	50	25	50	25	185
Future Volume (veh/h)	70	355	30	15	370	30	115	50	25	50	25	185
Initial Q (Qb), veh	0	0	0	0	0	0	0	0	0	0	0	0
Ped-Bike Adj(A_pbT)	1.00		1.00	1.00		1.00	1.00		0.97	1.00		0.99
Parking Bus, Adj	1.00	1.00	1.00	1.00	1.00	1.00	1.00	1.00	1.00	1.00	1.00	1.00
Work Zone On Approach		No			No			No			No	
Adj Sat Flow, veh/h/ln	1752	1554	1554	1767	1767	1767	1826	1619	1619	1856	1646	1646
Adj Flow Rate, veh/h	73	370	31	16	385	31	120	52	26	52	26	193
Peak Hour Factor	0.96	0.96	0.96	0.96	0.96	0.96	0.96	0.96	0.96	0.96	0.96	0.96
Percent Heavy Veh, %	10	10	10	9	9	9	5	5	5	3	3	3
Cap, veh/h	480	748	63	69	521	41	283	282	141	430	47	348
Arrive On Green	0.09	0.53	0.53	0.33	0.33	0.33	0.28	0.28	0.28	0.28	0.28	0.28
Sat Flow, veh/h	1668	1413	118	26	1571	123	1131	1008	504	1305	168	1246
Grp Volume(v), veh/h	73	0	401	432	0	0	120	0	78	52	0	219
Grp Sat Flow(s),veh/h/ln	1668	0	1532	1720	0	0	1131	0	1512	1305	0	1413
Q Serve(g_s), s	1.5	0.0	10.3	1.7	0.0	0.0	6.2	0.0	2.4	1.9	0.0	8.2
Cycle Q Clear(g_c), s	1.5	0.0	10.3	13.7	0.0	0.0	14.4	0.0	2.4	4.4	0.0	8.2
Prop In Lane	1.00		0.08	0.04		0.07	1.00		0.33	1.00		0.88
Lane Grp Cap(c), veh/h	480	0	811	631	0	0	283	0	422	430	0	395
V/C Ratio(X)	0.15	0.00	0.49	0.68	0.00	0.00	0.42	0.00	0.18	0.12	0.00	0.55
Avail Cap(c_a), veh/h	1001	0	1899	1302	0	0	609	0	857	805	0	802
HCM Platoon Ratio	1.00	1.00	1.00	1.00	1.00	1.00	1.00	1.00	1.00	1.00	1.00	1.00
Upstream Filter(I)	1.00	0.00	1.00	1.00	0.00	0.00	1.00	0.00	1.00	1.00	0.00	1.00
Uniform Delay (d), s/veh	9.5	0.0	9.3	18.3	0.0	0.0	25.1	0.0	16.9	18.6	0.0	19.0
Incr Delay (d2), s/veh	0.1	0.0	0.7	2.0	0.0	0.0	0.4	0.0	0.1	0.0	0.0	0.5
Initial Q Delay(d3),s/veh	0.0	0.0	0.0	0.0	0.0	0.0	0.0	0.0	0.0	0.0	0.0	0.0
%ile BackOfQ(95%),veh/ln	0.9	0.0	5.6	9.2	0.0	0.0	2.9	0.0	1.4	1.0	0.0	4.6
Unsig. Movement Delay, s/veh												
LnGrp Delay(d),s/veh	9.6	0.0	9.9	20.3	0.0	0.0	25.5	0.0	17.0	18.6	0.0	19.4
LnGrp LOS	A	A	A	C	A	A	C	A	B	B	A	B
Approach Vol, veh/h		474			432			198			271	
Approach Delay, s/veh		9.9			20.3			22.1			19.3	
Approach LOS		A			C			C			B	

Timer - Assigned Phs	1	2		4		6		8
Phs Duration (G+Y+Rc), s	12.2	25.8		23.7		38.0		23.7
Change Period (Y+Rc), s	6.5	* 5.3		6.5		* 5.3		6.5
Max Green Setting (Gmax), s	25.0	* 45		35.0		* 77		35.0
Max Q Clear Time (g_c+I1), s	3.5	15.7		16.4		12.3		10.2
Green Ext Time (p_c), s	0.1	4.7		0.4		4.7		0.8

Intersection Summary	
HCM 6th Ctrl Delay	16.8
HCM 6th LOS	B

Notes

* HCM 6th computational engine requires equal clearance times for the phases crossing the barrier.

Intersection	
Int Delay, s/veh	0.2

Movement	EBL	EBT	WBT	WBR	SBL	SBR
Lane Configurations						
Traffic Vol, veh/h	10	420	415	5	5	0
Future Vol, veh/h	10	420	415	5	5	0
Conflicting Peds, #/hr	0	0	0	0	0	0
Sign Control	Free	Free	Free	Free	Stop	Stop
RT Channelized	-	None	-	None	-	None
Storage Length	-	-	-	-	0	-
Veh in Median Storage, #	-	0	0	-	0	-
Grade, %	-	0	0	-	0	-
Peak Hour Factor	92	92	92	92	92	92
Heavy Vehicles, %	4	4	9	9	2	2
Mvmt Flow	11	457	451	5	5	0

Major/Minor	Major1		Major2		Minor2	
Conflicting Flow All	456	0	-	0	933	454
Stage 1	-	-	-	-	454	-
Stage 2	-	-	-	-	479	-
Critical Hdwy	4.14	-	-	-	6.42	6.22
Critical Hdwy Stg 1	-	-	-	-	5.42	-
Critical Hdwy Stg 2	-	-	-	-	5.42	-
Follow-up Hdwy	2.236	-	-	-	3.518	3.318
Pot Cap-1 Maneuver	1094	-	-	-	295	606
Stage 1	-	-	-	-	640	-
Stage 2	-	-	-	-	623	-
Platoon blocked, %		-	-	-		
Mov Cap-1 Maneuver	1094	-	-	-	291	606
Mov Cap-2 Maneuver	-	-	-	-	291	-
Stage 1	-	-	-	-	632	-
Stage 2	-	-	-	-	623	-

Approach	EB	WB	SB
HCM Control Delay, s	0.2	0	17.6
HCM LOS			C

Minor Lane/Major Mvmt	EBL	EBT	WBT	WBR	SBLn1
Capacity (veh/h)	1094	-	-	-	291
HCM Lane V/C Ratio	0.01	-	-	-	0.019
HCM Control Delay (s)	8.3	0	-	-	17.6
HCM Lane LOS	A	A	-	-	C
HCM 95th %tile Q(veh)	0	-	-	-	0.1

Movement	EBL	EBT	EBR	WBL	WBT	WBR	NBL	NBT	NBR	SBL	SBT	SBR
Lane Configurations												
Traffic Volume (veh/h)	10	385	30	5	315	15	45	0	5	70	0	60
Future Volume (veh/h)	10	385	30	5	315	15	45	0	5	70	0	60
Initial Q (Qb), veh	0	0	0	0	0	0	0	0	0	0	0	0
Ped-Bike Adj(A_pbT)	1.00		0.98	1.00		1.00	1.00		1.00	1.00		1.00
Parking Bus, Adj	1.00	1.00	1.00	1.00	1.00	1.00	1.00	1.00	1.00	1.00	1.00	1.00
Work Zone On Approach		No			No			No			No	
Adj Sat Flow, veh/h/ln	1841	1841	1841	1811	1811	1811	1870	1870	1870	1885	1885	1885
Adj Flow Rate, veh/h	12	458	36	6	375	18	54	0	6	83	0	71
Peak Hour Factor	0.84	0.84	0.84	0.84	0.84	0.84	0.84	0.84	0.84	0.84	0.84	0.84
Percent Heavy Veh, %	4	4	4	6	6	6	2	2	2	1	1	1
Cap, veh/h	594	740	58	519	754	36	520	16	26	377	4	117
Arrive On Green	0.44	0.44	0.44	0.44	0.44	0.44	0.16	0.00	0.16	0.16	0.00	0.16
Sat Flow, veh/h	975	1681	132	874	1714	82	1336	98	159	815	23	717
Grp Volume(v), veh/h	12	0	494	6	0	393	60	0	0	154	0	0
Grp Sat Flow(s),veh/h/ln	975	0	1814	874	0	1796	1593	0	0	1555	0	0
Q Serve(g_s), s	0.2	0.0	4.8	0.1	0.0	3.6	0.0	0.0	0.0	1.4	0.0	0.0
Cycle Q Clear(g_c), s	3.8	0.0	4.8	4.9	0.0	3.6	0.7	0.0	0.0	2.0	0.0	0.0
Prop In Lane	1.00		0.07	1.00		0.05	0.90		0.10	0.54		0.46
Lane Grp Cap(c), veh/h	594	0	798	519	0	790	562	0	0	498	0	0
V/C Ratio(X)	0.02	0.00	0.62	0.01	0.00	0.50	0.11	0.00	0.00	0.31	0.00	0.00
Avail Cap(c_a), veh/h	1476	0	2439	1310	0	2416	1562	0	0	1607	0	0
HCM Platoon Ratio	1.00	1.00	1.00	1.00	1.00	1.00	1.00	1.00	1.00	1.00	1.00	1.00
Upstream Filter(I)	1.00	0.00	1.00	1.00	0.00	1.00	1.00	0.00	0.00	1.00	0.00	0.00
Uniform Delay (d), s/veh	5.9	0.0	4.9	6.8	0.0	4.6	8.2	0.0	0.0	8.7	0.0	0.0
Incr Delay (d2), s/veh	0.0	0.0	0.8	0.0	0.0	0.5	0.1	0.0	0.0	0.3	0.0	0.0
Initial Q Delay(d3),s/veh	0.0	0.0	0.0	0.0	0.0	0.0	0.0	0.0	0.0	0.0	0.0	0.0
%ile BackOfQ(95%),veh/ln	0.0	0.0	0.8	0.0	0.0	0.6	0.3	0.0	0.0	0.8	0.0	0.0
Unsig. Movement Delay, s/veh												
LnGrp Delay(d),s/veh	5.9	0.0	5.7	6.8	0.0	5.0	8.3	0.0	0.0	9.1	0.0	0.0
LnGrp LOS	A	A	A	A	A	A	A	A	A	A	A	A
Approach Vol, veh/h		506			399			60			154	
Approach Delay, s/veh		5.7			5.1			8.3			9.1	
Approach LOS		A			A			A			A	

Timer - Assigned Phs		2		4		6		8				
Phs Duration (G+Y+Rc), s		8.2		14.5		8.2		14.5				
Change Period (Y+Rc), s		4.5		4.5		4.5		4.5				
Max Green Setting (Gmax), s		20.5		30.5		20.5		30.5				
Max Q Clear Time (g_c+I1), s		2.7		6.8		4.0		6.9				
Green Ext Time (p_c), s		0.2		3.2		0.7		2.4				

Intersection Summary	
HCM 6th Ctrl Delay	6.1
HCM 6th LOS	A

Intersection	
Int Delay, s/veh	0

Movement	EBL	EBT	WBT	WBR	SBL	SBR
Lane Configurations		↑	↑		⋔	
Traffic Vol, veh/h	0	460	335	0	0	0
Future Vol, veh/h	0	460	335	0	0	0
Conflicting Peds, #/hr	0	0	0	0	0	0
Sign Control	Free	Free	Free	Free	Stop	Stop
RT Channelized	-	None	-	None	-	None
Storage Length	-	-	-	-	0	-
Veh in Median Storage, #	-	0	0	-	0	-
Grade, %	-	0	0	-	0	-
Peak Hour Factor	92	92	92	92	92	92
Heavy Vehicles, %	6	6	6	6	2	2
Mvmt Flow	0	500	364	0	0	0

Major/Minor	Major1		Major2		Minor2	
Conflicting Flow All	-	0	-	0	864	364
Stage 1	-	-	-	-	364	-
Stage 2	-	-	-	-	500	-
Critical Hdwy	-	-	-	-	6.42	6.22
Critical Hdwy Stg 1	-	-	-	-	5.42	-
Critical Hdwy Stg 2	-	-	-	-	5.42	-
Follow-up Hdwy	-	-	-	-	3.518	3.318
Pot Cap-1 Maneuver	0	-	-	0	325	681
Stage 1	0	-	-	0	703	-
Stage 2	0	-	-	0	609	-
Platoon blocked, %		-	-			
Mov Cap-1 Maneuver	-	-	-	-	325	681
Mov Cap-2 Maneuver	-	-	-	-	325	-
Stage 1	-	-	-	-	703	-
Stage 2	-	-	-	-	609	-

Approach	EB	WB	SB
HCM Control Delay, s	0	0	0
HCM LOS			A

Minor Lane/Major Mvmt	EBT	WBT	SBLn1
Capacity (veh/h)	-	-	-
HCM Lane V/C Ratio	-	-	-
HCM Control Delay (s)	-	-	0
HCM Lane LOS	-	-	A
HCM 95th %tile Q(veh)	-	-	-

Intersection	
Int Delay, s/veh	0

Movement	EBT	EBR	WBL	WBT	NBL	NBR
Lane Configurations	↑			↑	⋔	
Traffic Vol, veh/h	460	0	0	335	0	0
Future Vol, veh/h	460	0	0	335	0	0
Conflicting Peds, #/hr	0	0	0	0	0	0
Sign Control	Free	Free	Free	Free	Stop	Stop
RT Channelized	-	None	-	None	-	None
Storage Length	-	-	-	-	0	-
Veh in Median Storage, #	0	-	-	0	0	-
Grade, %	0	-	-	0	0	-
Peak Hour Factor	92	92	92	92	92	92
Heavy Vehicles, %	6	6	6	6	2	2
Mvmt Flow	500	0	0	364	0	0

Major/Minor	Major1		Major2		Minor1	
Conflicting Flow All	0	-	-	-	864	500
Stage 1	-	-	-	-	500	-
Stage 2	-	-	-	-	364	-
Critical Hdwy	-	-	-	-	6.42	6.22
Critical Hdwy Stg 1	-	-	-	-	5.42	-
Critical Hdwy Stg 2	-	-	-	-	5.42	-
Follow-up Hdwy	-	-	-	-	3.518	3.318
Pot Cap-1 Maneuver	-	0	0	-	325	571
Stage 1	-	0	0	-	609	-
Stage 2	-	0	0	-	703	-
Platoon blocked, %	-			-		
Mov Cap-1 Maneuver	-	-	-	-	325	571
Mov Cap-2 Maneuver	-	-	-	-	325	-
Stage 1	-	-	-	-	609	-
Stage 2	-	-	-	-	703	-

Approach	EB	WB	NB
HCM Control Delay, s	0	0	0
HCM LOS			A

Minor Lane/Major Mvmt	NBLn1	EBT	WBT
Capacity (veh/h)	-	-	-
HCM Lane V/C Ratio	-	-	-
HCM Control Delay (s)	0	-	-
HCM Lane LOS	A	-	-
HCM 95th %tile Q(veh)	-	-	-

Movement	EBL	EBT	EBR	WBL	WBT	WBR	NBL	NBT	NBR	SBL	SBT	SBR
Lane Configurations												
Traffic Volume (veh/h)	70	355	35	25	240	90	25	20	35	80	15	70
Future Volume (veh/h)	70	355	35	25	240	90	25	20	35	80	15	70
Initial Q (Qb), veh	0	0	0	0	0	0	0	0	0	0	0	0
Ped-Bike Adj(A_pbT)	1.00		1.00	1.00		1.00	1.00		1.00	1.00		1.00
Parking Bus, Adj	1.00	1.00	1.00	1.00	1.00	1.00	1.00	1.00	1.00	1.00	1.00	1.00
Work Zone On Approach		No			No			No			No	
Adj Sat Flow, veh/h/ln	1811	1811	1811	1841	1841	1841	1796	1796	1796	1811	1811	1811
Adj Flow Rate, veh/h	83	423	42	30	286	107	30	24	42	95	18	83
Peak Hour Factor	0.84	0.84	0.84	0.84	0.84	0.84	0.84	0.84	0.84	0.84	0.84	0.84
Percent Heavy Veh, %	6	6	6	4	4	4	7	7	7	6	6	6
Cap, veh/h	623	700	69	520	795	673	261	92	117	570	51	236
Arrive On Green	0.43	0.43	0.43	0.43	0.43	0.43	0.18	0.18	0.18	0.18	0.18	0.18
Sat Flow, veh/h	959	1621	161	912	1841	1558	319	503	640	1293	281	1297
Grp Volume(v), veh/h	83	0	465	30	286	107	96	0	0	95	0	101
Grp Sat Flow(s),veh/h/ln	959	0	1782	912	1841	1558	1462	0	0	1293	0	1578
Q Serve(g_s), s	1.5	0.0	4.7	0.6	2.4	1.0	0.1	0.0	0.0	0.0	0.0	1.3
Cycle Q Clear(g_c), s	3.9	0.0	4.7	5.3	2.4	1.0	1.4	0.0	0.0	1.1	0.0	1.3
Prop In Lane	1.00		0.09	1.00		1.00	0.31		0.44	1.00		0.82
Lane Grp Cap(c), veh/h	623	0	769	520	795	673	469	0	0	570	0	287
V/C Ratio(X)	0.13	0.00	0.60	0.06	0.36	0.16	0.20	0.00	0.00	0.17	0.00	0.35
Avail Cap(c_a), veh/h	1258	0	1949	1124	2014	1704	1814	0	0	1749	0	1726
HCM Platoon Ratio	1.00	1.00	1.00	1.00	1.00	1.00	1.00	1.00	1.00	1.00	1.00	1.00
Upstream Filter(I)	1.00	0.00	1.00	1.00	1.00	1.00	1.00	0.00	0.00	1.00	0.00	1.00
Uniform Delay (d), s/veh	5.8	0.0	5.1	7.1	4.5	4.0	8.3	0.0	0.0	8.3	0.0	8.3
Incr Delay (d2), s/veh	0.1	0.0	0.8	0.0	0.3	0.1	0.2	0.0	0.0	0.1	0.0	0.7
Initial Q Delay(d3),s/veh	0.0	0.0	0.0	0.0	0.0	0.0	0.0	0.0	0.0	0.0	0.0	0.0
%ile BackOfQ(95%),veh/ln	0.3	0.0	1.2	0.1	0.5	0.2	0.5	0.0	0.0	0.5	0.0	0.6
Unsig. Movement Delay, s/veh												
LnGrp Delay(d),s/veh	5.9	0.0	5.9	7.2	4.7	4.1	8.5	0.0	0.0	8.4	0.0	9.1
LnGrp LOS	A	A	A	A	A	A	A	A	A	A	A	A
Approach Vol, veh/h		548			423			96			196	
Approach Delay, s/veh		5.9			4.8			8.5			8.7	
Approach LOS		A			A			A			A	

Timer - Assigned Phs	2	4	6	8
Phs Duration (G+Y+Rc), s	8.7	14.6	8.7	14.6
Change Period (Y+Rc), s	4.5	4.5	4.5	4.5
Max Green Setting (Gmax), s	25.5	25.5	25.5	25.5
Max Q Clear Time (g_c+I1), s	3.4	6.7	3.3	7.3
Green Ext Time (p_c), s	0.5	3.3	0.9	2.0

Intersection Summary	
HCM 6th Ctrl Delay	6.1
HCM 6th LOS	A

HCM 6th Signalized Intersection Summary
1: Jackson Dr & WIS-60

05/19/2020

Movement	EBL	EBT	EBR	WBL	WBT	WBR	NBL	NBT	NBR	SBL	SBT	SBR
Lane Configurations												
Traffic Volume (veh/h)	180	430	125	20	350	55	70	80	20	50	65	105
Future Volume (veh/h)	180	430	125	20	350	55	70	80	20	50	65	105
Initial Q (Qb), veh	0	0	0	0	0	0	0	0	0	0	0	0
Ped-Bike Adj(A_pbT)	1.00		0.98	1.00		0.98	0.99		0.99	0.99		0.97
Parking Bus, Adj	1.00	1.00	1.00	1.00	1.00	1.00	1.00	1.00	1.00	1.00	1.00	1.00
Work Zone On Approach		No			No			No			No	
Adj Sat Flow, veh/h/ln	1856	1646	1646	1841	1841	1841	1856	1646	1646	1885	1672	1672
Adj Flow Rate, veh/h	194	462	134	22	376	59	75	86	22	54	70	113
Peak Hour Factor	0.93	0.93	0.93	0.93	0.93	0.93	0.93	0.93	0.93	0.93	0.93	0.93
Percent Heavy Veh, %	3	3	3	4	4	4	3	3	3	1	1	1
Cap, veh/h	576	708	205	76	512	78	254	282	72	334	126	204
Arrive On Green	0.13	0.58	0.58	0.35	0.35	0.35	0.22	0.22	0.22	0.22	0.22	0.22
Sat Flow, veh/h	1767	1219	354	38	1483	225	1185	1261	323	1287	564	910
Grp Volume(v), veh/h	194	0	596	457	0	0	75	0	108	54	0	183
Grp Sat Flow(s),veh/h/ln	1767	0	1573	1746	0	0	1185	0	1584	1287	0	1474
Q Serve(g_s), s	3.7	0.0	15.4	2.5	0.0	0.0	3.6	0.0	3.4	2.2	0.0	6.6
Cycle Q Clear(g_c), s	3.7	0.0	15.4	13.7	0.0	0.0	10.2	0.0	3.4	5.6	0.0	6.6
Prop In Lane	1.00		0.22	0.05		0.13	1.00		0.20	1.00		0.62
Lane Grp Cap(c), veh/h	576	0	913	665	0	0	254	0	355	334	0	330
V/C Ratio(X)	0.34	0.00	0.65	0.69	0.00	0.00	0.29	0.00	0.30	0.16	0.00	0.55
Avail Cap(c_a), veh/h	1083	0	1995	1343	0	0	677	0	919	793	0	855
HCM Platoon Ratio	1.00	1.00	1.00	1.00	1.00	1.00	1.00	1.00	1.00	1.00	1.00	1.00
Upstream Filter(I)	1.00	0.00	1.00	1.00	0.00	0.00	1.00	0.00	1.00	1.00	0.00	1.00
Uniform Delay (d), s/veh	8.3	0.0	8.5	17.4	0.0	0.0	25.3	0.0	19.5	21.8	0.0	20.7
Incr Delay (d2), s/veh	0.1	0.0	1.2	1.9	0.0	0.0	0.2	0.0	0.2	0.1	0.0	0.5
Initial Q Delay(d3),s/veh	0.0	0.0	0.0	0.0	0.0	0.0	0.0	0.0	0.0	0.0	0.0	0.0
%ile BackOfQ(95%),veh/ln	2.2	0.0	8.0	9.3	0.0	0.0	1.8	0.0	2.2	1.2	0.0	4.0
Unsig. Movement Delay, s/veh												
LnGrp Delay(d),s/veh	8.4	0.0	9.7	19.2	0.0	0.0	25.5	0.0	19.7	21.9	0.0	21.3
LnGrp LOS	A	A	A	B	A	A	C	A	B	C	A	C
Approach Vol, veh/h		790			457			183			237	
Approach Delay, s/veh		9.4			19.2			22.1			21.4	
Approach LOS		A			B			C			C	

Timer - Assigned Phs	1	2		4		6		8
Phs Duration (G+Y+Rc), s	14.2	26.1		20.0		40.3		20.0
Change Period (Y+Rc), s	6.5	* 5.3		6.5		* 5.3		6.5
Max Green Setting (Gmax), s	25.0	* 45		35.0		* 77		35.0
Max Q Clear Time (g_c+I1), s	5.7	15.7		12.2		17.4		8.6
Green Ext Time (p_c), s	0.2	5.1		0.4		8.1		0.7

Intersection Summary	
HCM 6th Ctrl Delay	15.2
HCM 6th LOS	B

Notes

* HCM 6th computational engine requires equal clearance times for the phases crossing the barrier.

Intersection	
Int Delay, s/veh	0.3

Movement	EBL	EBT	WBT	WBR	SBL	SBR
Lane Configurations						
Traffic Vol, veh/h	5	495	420	0	10	5
Future Vol, veh/h	5	495	420	0	10	5
Conflicting Peds, #/hr	0	0	0	0	0	0
Sign Control	Free	Free	Free	Free	Stop	Stop
RT Channelized	-	None	-	None	-	None
Storage Length	-	-	-	-	0	-
Veh in Median Storage, #	-	0	0	-	0	-
Grade, %	-	0	0	-	0	-
Peak Hour Factor	92	92	92	92	92	92
Heavy Vehicles, %	3	3	4	4	2	2
Mvmt Flow	5	538	457	0	11	5

Major/Minor	Major1		Major2		Minor2	
Conflicting Flow All	457	0	-	0	1005	457
Stage 1	-	-	-	-	457	-
Stage 2	-	-	-	-	548	-
Critical Hdwy	4.13	-	-	-	6.42	6.22
Critical Hdwy Stg 1	-	-	-	-	5.42	-
Critical Hdwy Stg 2	-	-	-	-	5.42	-
Follow-up Hdwy	2.227	-	-	-	3.518	3.318
Pot Cap-1 Maneuver	1099	-	-	-	268	604
Stage 1	-	-	-	-	638	-
Stage 2	-	-	-	-	579	-
Platoon blocked, %		-	-	-		
Mov Cap-1 Maneuver	1099	-	-	-	266	604
Mov Cap-2 Maneuver	-	-	-	-	266	-
Stage 1	-	-	-	-	634	-
Stage 2	-	-	-	-	579	-

Approach	EB	WB	SB
HCM Control Delay, s	0.1	0	16.6
HCM LOS			C

Minor Lane/Major Mvmt	EBL	EBT	WBT	WBR	SBLn1
Capacity (veh/h)	1099	-	-	-	327
HCM Lane V/C Ratio	0.005	-	-	-	0.05
HCM Control Delay (s)	8.3	0	-	-	16.6
HCM Lane LOS	A	A	-	-	C
HCM 95th %tile Q(veh)	0	-	-	-	0.2

Movement	EBL	EBT	EBR	WBL	WBT	WBR	NBL	NBT	NBR	SBL	SBT	SBR
Lane Configurations												
Traffic Volume (veh/h)	50	415	40	0	375	45	35	0	5	20	0	10
Future Volume (veh/h)	50	415	40	0	375	45	35	0	5	20	0	10
Initial Q (Qb), veh	0	0	0	0	0	0	0	0	0	0	0	0
Ped-Bike Adj(A_pbT)	1.00		1.00	1.00		1.00	1.00		1.00	1.00		1.00
Parking Bus, Adj	1.00	1.00	1.00	1.00	1.00	1.00	1.00	1.00	1.00	1.00	1.00	1.00
Work Zone On Approach		No			No			No			No	
Adj Sat Flow, veh/h/ln	1856	1856	1856	1841	1841	1841	1870	1870	1870	1885	1885	1885
Adj Flow Rate, veh/h	57	477	46	0	431	52	40	0	6	23	0	11
Peak Hour Factor	0.87	0.87	0.87	0.87	0.87	0.87	0.87	0.87	0.87	0.87	0.87	0.87
Percent Heavy Veh, %	3	3	3	4	4	4	2	2	2	1	1	1
Cap, veh/h	298	646	62	149	625	75	660	10	80	529	24	205
Arrive On Green	0.39	0.39	0.39	0.00	0.39	0.39	0.43	0.00	0.43	0.43	0.00	0.43
Sat Flow, veh/h	905	1666	161	865	1611	194	1225	23	187	950	56	481
Grp Volume(v), veh/h	57	0	523	0	0	483	46	0	0	34	0	0
Grp Sat Flow(s),veh/h/ln	905	0	1826	865	0	1805	1435	0	0	1488	0	0
Q Serve(g_s), s	2.7	0.0	11.8	0.0	0.0	10.8	0.2	0.0	0.0	0.0	0.0	0.0
Cycle Q Clear(g_c), s	13.5	0.0	11.8	0.0	0.0	10.8	0.8	0.0	0.0	0.5	0.0	0.0
Prop In Lane	1.00		0.09	1.00		0.11	0.87		0.13	0.68		0.32
Lane Grp Cap(c), veh/h	298	0	709	149	0	701	750	0	0	758	0	0
V/C Ratio(X)	0.19	0.00	0.74	0.00	0.00	0.69	0.06	0.00	0.00	0.04	0.00	0.00
Avail Cap(c_a), veh/h	520	0	1156	361	0	1142	750	0	0	758	0	0
HCM Platoon Ratio	1.00	1.00	1.00	1.00	1.00	1.00	1.00	1.00	1.00	1.00	1.00	1.00
Upstream Filter(I)	1.00	0.00	1.00	0.00	0.00	1.00	1.00	0.00	0.00	1.00	0.00	0.00
Uniform Delay (d), s/veh	18.0	0.0	12.6	0.0	0.0	12.3	8.2	0.0	0.0	8.1	0.0	0.0
Incr Delay (d2), s/veh	0.3	0.0	1.5	0.0	0.0	1.2	0.2	0.0	0.0	0.1	0.0	0.0
Initial Q Delay(d3),s/veh	0.0	0.0	0.0	0.0	0.0	0.0	0.0	0.0	0.0	0.0	0.0	0.0
%ile BackOfQ(95%),veh/ln	0.9	0.0	7.2	0.0	0.0	6.4	0.5	0.0	0.0	0.3	0.0	0.0
Unsig. Movement Delay, s/veh												
LnGrp Delay(d),s/veh	18.3	0.0	14.2	0.0	0.0	13.5	8.3	0.0	0.0	8.2	0.0	0.0
LnGrp LOS	B	A	B	A	A	B	A	A	A	A	A	A
Approach Vol, veh/h		580			483			46			34	
Approach Delay, s/veh		14.6			13.5			8.3			8.2	
Approach LOS		B			B			A			A	

Timer - Assigned Phs		2		4		6		8				
Phs Duration (G+Y+Rc), s		25.0		23.2		25.0		23.2				
Change Period (Y+Rc), s		4.5		4.5		4.5		4.5				
Max Green Setting (Gmax), s		20.5		30.5		20.5		30.5				
Max Q Clear Time (g_c+I1), s		2.8		15.5		2.5		12.8				
Green Ext Time (p_c), s		0.1		3.2		0.1		2.8				

Intersection Summary												
HCM 6th Ctrl Delay			13.7									
HCM 6th LOS			B									

Intersection	
Int Delay, s/veh	0

Movement	EBL	EBT	WBT	WBR	SBL	SBR
Lane Configurations		↑	↑		⋔	
Traffic Vol, veh/h	0	440	420	0	0	0
Future Vol, veh/h	0	440	420	0	0	0
Conflicting Peds, #/hr	0	0	0	0	0	0
Sign Control	Free	Free	Free	Free	Stop	Stop
RT Channelized	-	None	-	None	-	None
Storage Length	-	-	-	-	0	-
Veh in Median Storage, #	-	0	0	-	0	-
Grade, %	-	0	0	-	0	-
Peak Hour Factor	92	92	92	92	92	92
Heavy Vehicles, %	2	2	4	4	2	2
Mvmt Flow	0	478	457	0	0	0

Major/Minor	Major1		Major2		Minor2	
Conflicting Flow All	-	0	-	0	935	457
Stage 1	-	-	-	-	457	-
Stage 2	-	-	-	-	478	-
Critical Hdwy	-	-	-	-	6.42	6.22
Critical Hdwy Stg 1	-	-	-	-	5.42	-
Critical Hdwy Stg 2	-	-	-	-	5.42	-
Follow-up Hdwy	-	-	-	-	3.518	3.318
Pot Cap-1 Maneuver	0	-	-	0	295	604
Stage 1	0	-	-	0	638	-
Stage 2	0	-	-	0	624	-
Platoon blocked, %		-	-			
Mov Cap-1 Maneuver	-	-	-	-	295	604
Mov Cap-2 Maneuver	-	-	-	-	295	-
Stage 1	-	-	-	-	638	-
Stage 2	-	-	-	-	624	-

Approach	EB	WB	SB
HCM Control Delay, s	0	0	0
HCM LOS			A

Minor Lane/Major Mvmt	EBT	WBT	SBLn1
Capacity (veh/h)	-	-	-
HCM Lane V/C Ratio	-	-	-
HCM Control Delay (s)	-	-	0
HCM Lane LOS	-	-	A
HCM 95th %tile Q(veh)	-	-	-

Intersection	
Int Delay, s/veh	0

Movement	EBT	EBR	WBL	WBT	NBL	NBR
Lane Configurations	↑			↑	⋔	
Traffic Vol, veh/h	440	0	0	420	0	0
Future Vol, veh/h	440	0	0	420	0	0
Conflicting Peds, #/hr	0	0	0	0	0	0
Sign Control	Free	Free	Free	Free	Stop	Stop
RT Channelized	-	None	-	None	-	None
Storage Length	-	-	-	-	0	-
Veh in Median Storage, #	0	-	-	0	0	-
Grade, %	0	-	-	0	0	-
Peak Hour Factor	92	92	92	92	92	92
Heavy Vehicles, %	2	2	4	4	2	2
Mvmt Flow	478	0	0	457	0	0

Major/Minor	Major1		Major2		Minor1	
Conflicting Flow All	0	-	-	-	935	478
Stage 1	-	-	-	-	478	-
Stage 2	-	-	-	-	457	-
Critical Hdwy	-	-	-	-	6.42	6.22
Critical Hdwy Stg 1	-	-	-	-	5.42	-
Critical Hdwy Stg 2	-	-	-	-	5.42	-
Follow-up Hdwy	-	-	-	-	3.518	3.318
Pot Cap-1 Maneuver	-	0	0	-	295	587
Stage 1	-	0	0	-	624	-
Stage 2	-	0	0	-	638	-
Platoon blocked, %	-			-		
Mov Cap-1 Maneuver	-	-	-	-	295	587
Mov Cap-2 Maneuver	-	-	-	-	295	-
Stage 1	-	-	-	-	624	-
Stage 2	-	-	-	-	638	-

Approach	EB	WB	NB
HCM Control Delay, s	0	0	0
HCM LOS			A

Minor Lane/Major Mvmt	NBLn1	EBT	WBT
Capacity (veh/h)	-	-	-
HCM Lane V/C Ratio	-	-	-
HCM Control Delay (s)	0	-	-
HCM Lane LOS	A	-	-
HCM 95th %tile Q(veh)	-	-	-

Movement	EBL	EBT	EBR	WBL	WBT	WBR	NBL	NBT	NBR	SBL	SBT	SBR
Lane Configurations												
Traffic Volume (veh/h)	55	285	100	45	315	80	50	40	25	55	35	55
Future Volume (veh/h)	55	285	100	45	315	80	50	40	25	55	35	55
Initial Q (Qb), veh	0	0	0	0	0	0	0	0	0	0	0	0
Ped-Bike Adj(A_pbT)	1.00		1.00	1.00		0.98	1.00		0.98	1.00		1.00
Parking Bus, Adj	1.00	1.00	1.00	1.00	1.00	1.00	1.00	1.00	1.00	1.00	1.00	1.00
Work Zone On Approach		No			No			No			No	
Adj Sat Flow, veh/h/ln	1870	1870	1870	1870	1870	1870	1885	1885	1885	1885	1885	1885
Adj Flow Rate, veh/h	67	348	122	55	384	98	61	49	30	67	43	67
Peak Hour Factor	0.82	0.82	0.82	0.82	0.82	0.82	0.82	0.82	0.82	0.82	0.82	0.82
Percent Heavy Veh, %	2	2	2	2	2	2	1	1	1	1	1	1
Cap, veh/h	547	559	196	497	791	656	313	142	66	610	137	213
Arrive On Green	0.42	0.42	0.42	0.42	0.42	0.42	0.21	0.21	0.21	0.21	0.21	0.21
Sat Flow, veh/h	913	1323	464	923	1870	1552	484	689	320	1330	664	1035
Grp Volume(v), veh/h	67	0	470	55	384	98	140	0	0	67	0	110
Grp Sat Flow(s),veh/h/ln	913	0	1787	923	1870	1552	1494	0	0	1330	0	1699
Q Serve(g_s), s	1.4	0.0	5.0	1.2	3.6	0.9	0.7	0.0	0.0	0.0	0.0	1.3
Cycle Q Clear(g_c), s	5.0	0.0	5.0	6.2	3.6	0.9	2.0	0.0	0.0	0.7	0.0	1.3
Prop In Lane	1.00		0.26	1.00		1.00	0.44		0.21	1.00		0.61
Lane Grp Cap(c), veh/h	547	0	755	497	791	656	521	0	0	610	0	350
V/C Ratio(X)	0.12	0.00	0.62	0.11	0.49	0.15	0.27	0.00	0.00	0.11	0.00	0.31
Avail Cap(c_a), veh/h	838	0	1326	792	1388	1152	1334	0	0	1323	0	1261
HCM Platoon Ratio	1.00	1.00	1.00	1.00	1.00	1.00	1.00	1.00	1.00	1.00	1.00	1.00
Upstream Filter(I)	1.00	0.00	1.00	1.00	1.00	1.00	1.00	0.00	0.00	1.00	0.00	1.00
Uniform Delay (d), s/veh	6.9	0.0	5.5	7.9	5.1	4.3	8.4	0.0	0.0	7.9	0.0	8.2
Incr Delay (d2), s/veh	0.1	0.0	0.8	0.1	0.5	0.1	0.3	0.0	0.0	0.1	0.0	0.5
Initial Q Delay(d3),s/veh	0.0	0.0	0.0	0.0	0.0	0.0	0.0	0.0	0.0	0.0	0.0	0.0
%ile BackOfQ(95%),veh/ln	0.3	0.0	1.4	0.2	0.9	0.2	0.8	0.0	0.0	0.4	0.0	0.7
Unsig. Movement Delay, s/veh												
LnGrp Delay(d),s/veh	7.0	0.0	6.3	8.0	5.5	4.4	8.7	0.0	0.0	8.0	0.0	8.7
LnGrp LOS	A	A	A	A	A	A	A	A	A	A	A	A
Approach Vol, veh/h		537			537			140			177	
Approach Delay, s/veh		6.4			5.6			8.7			8.4	
Approach LOS		A			A			A			A	

Timer - Assigned Phs	2	4	6	8
Phs Duration (G+Y+Rc), s	9.5	14.8	9.5	14.8
Change Period (Y+Rc), s	4.5	4.5	4.5	4.5
Max Green Setting (Gmax), s	18.0	18.0	18.0	18.0
Max Q Clear Time (g_c+I1), s	4.0	7.0	3.3	8.2
Green Ext Time (p_c), s	0.6	2.6	0.7	2.1

Intersection Summary	
HCM 6th Ctrl Delay	6.6
HCM 6th LOS	A

HCM 6th Signalized Intersection Summary
1: Jackson Dr & WIS-60

05/19/2020

Movement	EBL	EBT	EBR	WBL	WBT	WBR	NBL	NBT	NBR	SBL	SBT	SBR
Lane Configurations												
Traffic Volume (veh/h)	65	345	85	20	370	45	95	40	20	35	30	80
Future Volume (veh/h)	65	345	85	20	370	45	95	40	20	35	30	80
Initial Q (Qb), veh	0	0	0	0	0	0	0	0	0	0	0	0
Ped-Bike Adj(A_pbT)	1.00		1.00	1.00		1.00	1.00		1.00	1.00		1.00
Parking Bus, Adj	1.00	1.00	1.00	1.00	1.00	1.00	1.00	1.00	1.00	1.00	1.00	1.00
Work Zone On Approach		No			No			No			No	
Adj Sat Flow, veh/h/ln	1870	1659	1659	1870	1870	1870	1885	1672	1672	1870	1659	1659
Adj Flow Rate, veh/h	66	352	87	20	378	46	97	41	20	36	31	82
Peak Hour Factor	0.98	0.98	0.98	0.98	0.98	0.98	0.98	0.98	0.98	0.98	0.98	0.98
Percent Heavy Veh, %	2	2	2	2	2	2	1	1	1	2	2	2
Cap, veh/h	588	736	182	86	553	65	306	206	101	359	78	207
Arrive On Green	0.10	0.57	0.57	0.35	0.35	0.35	0.19	0.19	0.19	0.19	0.19	0.19
Sat Flow, veh/h	1781	1283	317	34	1581	187	1290	1061	518	1341	402	1065
Grp Volume(v), veh/h	66	0	439	444	0	0	97	0	61	36	0	113
Grp Sat Flow(s),veh/h/ln	1781	0	1601	1802	0	0	1290	0	1579	1341	0	1467
Q Serve(g_s), s	1.0	0.0	8.2	0.5	0.0	0.0	3.6	0.0	1.6	1.2	0.0	3.4
Cycle Q Clear(g_c), s	1.0	0.0	8.2	10.6	0.0	0.0	7.0	0.0	1.6	2.8	0.0	3.4
Prop In Lane	1.00		0.20	0.05		0.10	1.00		0.33	1.00		0.73
Lane Grp Cap(c), veh/h	588	0	917	704	0	0	306	0	307	359	0	285
V/C Ratio(X)	0.11	0.00	0.48	0.63	0.00	0.00	0.32	0.00	0.20	0.10	0.00	0.40
Avail Cap(c_a), veh/h	1295	0	2412	1649	0	0	945	0	1089	1023	0	1012
HCM Platoon Ratio	1.00	1.00	1.00	1.00	1.00	1.00	1.00	1.00	1.00	1.00	1.00	1.00
Upstream Filter(I)	1.00	0.00	1.00	1.00	0.00	0.00	1.00	0.00	1.00	1.00	0.00	1.00
Uniform Delay (d), s/veh	7.0	0.0	6.4	14.2	0.0	0.0	20.9	0.0	17.1	18.3	0.0	17.8
Incr Delay (d2), s/veh	0.0	0.0	0.6	1.4	0.0	0.0	0.2	0.0	0.1	0.0	0.0	0.3
Initial Q Delay(d3),s/veh	0.0	0.0	0.0	0.0	0.0	0.0	0.0	0.0	0.0	0.0	0.0	0.0
%ile BackOfQ(95%),veh/ln	0.6	0.0	3.9	7.4	0.0	0.0	1.9	0.0	1.0	0.6	0.0	2.0
Unsig. Movement Delay, s/veh												
LnGrp Delay(d),s/veh	7.0	0.0	6.9	15.5	0.0	0.0	21.1	0.0	17.2	18.4	0.0	18.2
LnGrp LOS	A	A	A	B	A	A	C	A	B	B	A	B
Approach Vol, veh/h		505			444			158			149	
Approach Delay, s/veh		7.0			15.5			19.6			18.2	
Approach LOS		A			B			B			B	

Timer - Assigned Phs	1	2		4		6		8
Phs Duration (G+Y+Rc), s	11.3	23.0		16.4		34.4		16.4
Change Period (Y+Rc), s	6.5	* 5.3		6.5		* 5.3		6.5
Max Green Setting (Gmax), s	25.0	* 45		35.0		* 77		35.0
Max Q Clear Time (g_c+I1), s	3.0	12.6		9.0		10.2		5.4
Green Ext Time (p_c), s	0.0	4.9		0.3		5.3		0.4

Intersection Summary	
HCM 6th Ctrl Delay	12.9
HCM 6th LOS	B

Notes

* HCM 6th computational engine requires equal clearance times for the phases crossing the barrier.

Intersection	
Int Delay, s/veh	0

Movement	EBL	EBT	WBT	WBR	SBL	SBR
Lane Configurations						
Traffic Vol, veh/h	0	400	435	0	0	0
Future Vol, veh/h	0	400	435	0	0	0
Conflicting Peds, #/hr	0	0	0	0	0	0
Sign Control	Free	Free	Free	Free	Stop	Stop
RT Channelized	-	None	-	None	-	None
Storage Length	-	-	-	-	0	-
Veh in Median Storage, #	-	0	0	-	0	-
Grade, %	-	0	0	-	0	-
Peak Hour Factor	92	92	92	92	92	92
Heavy Vehicles, %	3	3	2	2	2	2
Mvmt Flow	0	435	473	0	0	0

Major/Minor	Major1		Major2		Minor2	
Conflicting Flow All	473	0	-	0	908	473
Stage 1	-	-	-	-	473	-
Stage 2	-	-	-	-	435	-
Critical Hdwy	4.13	-	-	-	6.42	6.22
Critical Hdwy Stg 1	-	-	-	-	5.42	-
Critical Hdwy Stg 2	-	-	-	-	5.42	-
Follow-up Hdwy	2.227	-	-	-	3.518	3.318
Pot Cap-1 Maneuver	1084	-	-	-	306	591
Stage 1	-	-	-	-	627	-
Stage 2	-	-	-	-	653	-
Platoon blocked, %		-	-	-		
Mov Cap-1 Maneuver	1084	-	-	-	306	591
Mov Cap-2 Maneuver	-	-	-	-	306	-
Stage 1	-	-	-	-	627	-
Stage 2	-	-	-	-	653	-

Approach	EB	WB	SB
HCM Control Delay, s	0	0	0
HCM LOS			A

Minor Lane/Major Mvmt	EBL	EBT	WBT	WBR	SBLn1
Capacity (veh/h)	1084	-	-	-	-
HCM Lane V/C Ratio	-	-	-	-	-
HCM Control Delay (s)	0	-	-	-	0
HCM Lane LOS	A	-	-	-	A
HCM 95th %tile Q(veh)	0	-	-	-	-

Movement	EBL	EBT	EBR	WBL	WBT	WBR	NBL	NBT	NBR	SBL	SBT	SBR
Lane Configurations												
Traffic Volume (veh/h)	20	340	40	0	365	20	35	0	0	20	0	35
Future Volume (veh/h)	20	340	40	0	365	20	35	0	0	20	0	35
Initial Q (Qb), veh	0	0	0	0	0	0	0	0	0	0	0	0
Ped-Bike Adj(A_pbT)	1.00		1.00	1.00		1.00	1.00		1.00	1.00		1.00
Parking Bus, Adj	1.00	1.00	1.00	1.00	1.00	1.00	1.00	1.00	1.00	1.00	1.00	1.00
Work Zone On Approach		No			No			No			No	
Adj Sat Flow, veh/h/ln	1856	1856	1856	1856	1856	1856	1870	1870	1870	1870	1870	1870
Adj Flow Rate, veh/h	21	362	43	0	388	21	37	0	0	21	0	37
Peak Hour Factor	0.94	0.94	0.94	0.94	0.94	0.94	0.94	0.94	0.94	0.94	0.94	0.94
Percent Heavy Veh, %	3	3	3	3	3	3	2	2	2	2	2	2
Cap, veh/h	286	518	62	166	556	30	823	0	0	330	49	467
Arrive On Green	0.32	0.32	0.32	0.00	0.32	0.32	0.47	0.00	0.00	0.47	0.00	0.47
Sat Flow, veh/h	968	1627	193	972	1744	94	1387	0	0	457	103	987
Grp Volume(v), veh/h	21	0	405	0	0	409	37	0	0	58	0	0
Grp Sat Flow(s),veh/h/ln	968	0	1820	972	0	1838	1387	0	0	1547	0	0
Q Serve(g_s), s	0.8	0.0	8.4	0.0	0.0	8.4	0.0	0.0	0.0	0.0	0.0	0.0
Cycle Q Clear(g_c), s	9.3	0.0	8.4	0.0	0.0	8.4	0.5	0.0	0.0	0.8	0.0	0.0
Prop In Lane	1.00		0.11	1.00		0.05	1.00		0.00	0.36		0.64
Lane Grp Cap(c), veh/h	286	0	580	166	0	586	823	0	0	846	0	0
V/C Ratio(X)	0.07	0.00	0.70	0.00	0.00	0.70	0.04	0.00	0.00	0.07	0.00	0.00
Avail Cap(c_a), veh/h	660	0	1282	542	0	1295	823	0	0	846	0	0
HCM Platoon Ratio	1.00	1.00	1.00	1.00	1.00	1.00	1.00	1.00	1.00	1.00	1.00	1.00
Upstream Filter(I)	1.00	0.00	1.00	0.00	0.00	1.00	1.00	0.00	0.00	1.00	0.00	0.00
Uniform Delay (d), s/veh	17.0	0.0	12.9	0.0	0.0	12.9	6.1	0.0	0.0	6.2	0.0	0.0
Incr Delay (d2), s/veh	0.1	0.0	1.5	0.0	0.0	1.5	0.1	0.0	0.0	0.2	0.0	0.0
Initial Q Delay(d3),s/veh	0.0	0.0	0.0	0.0	0.0	0.0	0.0	0.0	0.0	0.0	0.0	0.0
%ile BackOfQ(95%),veh/ln	0.3	0.0	5.2	0.0	0.0	5.3	0.3	0.0	0.0	0.4	0.0	0.0
Unsig. Movement Delay, s/veh												
LnGrp Delay(d),s/veh	17.1	0.0	14.5	0.0	0.0	14.4	6.2	0.0	0.0	6.4	0.0	0.0
LnGrp LOS	B	A	B	A	A	B	A	A	A	A	A	A
Approach Vol, veh/h		426			409			37			58	
Approach Delay, s/veh		14.6			14.4			6.2			6.4	
Approach LOS		B			B			A			A	

Timer - Assigned Phs		2		4		6		8				
Phs Duration (G+Y+Rc), s		25.0		18.3		25.0		18.3				
Change Period (Y+Rc), s		4.5		4.5		4.5		4.5				
Max Green Setting (Gmax), s		20.5		30.5		20.5		30.5				
Max Q Clear Time (g_c+I1), s		2.5		11.3		2.8		10.4				
Green Ext Time (p_c), s		0.1		2.4		0.2		2.4				

Intersection Summary												
HCM 6th Ctrl Delay			13.7									
HCM 6th LOS			B									

Intersection	
Int Delay, s/veh	0

Movement	EBL	EBT	WBT	WBR	SBL	SBR
Lane Configurations		↑	↑		⋔	
Traffic Vol, veh/h	0	360	385	0	0	0
Future Vol, veh/h	0	360	385	0	0	0
Conflicting Peds, #/hr	0	0	0	0	0	0
Sign Control	Free	Free	Free	Free	Stop	Stop
RT Channelized	-	None	-	None	-	None
Storage Length	-	-	-	-	0	-
Veh in Median Storage, #	-	0	0	-	0	-
Grade, %	-	0	0	-	0	-
Peak Hour Factor	92	92	92	92	92	92
Heavy Vehicles, %	2	2	3	3	2	2
Mvmt Flow	0	391	418	0	0	0

Major/Minor	Major1		Major2		Minor2	
Conflicting Flow All	-	0	-	0	809	418
Stage 1	-	-	-	-	418	-
Stage 2	-	-	-	-	391	-
Critical Hdwy	-	-	-	-	6.42	6.22
Critical Hdwy Stg 1	-	-	-	-	5.42	-
Critical Hdwy Stg 2	-	-	-	-	5.42	-
Follow-up Hdwy	-	-	-	-	3.518	3.318
Pot Cap-1 Maneuver	0	-	-	0	350	635
Stage 1	0	-	-	0	664	-
Stage 2	0	-	-	0	683	-
Platoon blocked, %		-	-			
Mov Cap-1 Maneuver	-	-	-	-	350	635
Mov Cap-2 Maneuver	-	-	-	-	350	-
Stage 1	-	-	-	-	664	-
Stage 2	-	-	-	-	683	-

Approach	EB	WB	SB
HCM Control Delay, s	0	0	0
HCM LOS			A

Minor Lane/Major Mvmt	EBT	WBT	SBLn1
Capacity (veh/h)	-	-	-
HCM Lane V/C Ratio	-	-	-
HCM Control Delay (s)	-	-	0
HCM Lane LOS	-	-	A
HCM 95th %tile Q(veh)	-	-	-

Intersection	
Int Delay, s/veh	0

Movement	EBT	EBR	WBL	WBT	NBL	NBR
Lane Configurations	↑			↑	⋔	
Traffic Vol, veh/h	360	0	0	385	0	0
Future Vol, veh/h	360	0	0	385	0	0
Conflicting Peds, #/hr	0	0	0	0	0	0
Sign Control	Free	Free	Free	Free	Stop	Stop
RT Channelized	-	None	-	None	-	None
Storage Length	-	-	-	-	0	-
Veh in Median Storage, #	0	-	-	0	0	-
Grade, %	0	-	-	0	0	-
Peak Hour Factor	92	92	92	92	92	92
Heavy Vehicles, %	2	2	3	3	2	2
Mvmt Flow	391	0	0	418	0	0

Major/Minor	Major1		Major2		Minor1	
Conflicting Flow All	0	-	-	-	809	391
Stage 1	-	-	-	-	391	-
Stage 2	-	-	-	-	418	-
Critical Hdwy	-	-	-	-	6.42	6.22
Critical Hdwy Stg 1	-	-	-	-	5.42	-
Critical Hdwy Stg 2	-	-	-	-	5.42	-
Follow-up Hdwy	-	-	-	-	3.518	3.318
Pot Cap-1 Maneuver	-	0	0	-	350	658
Stage 1	-	0	0	-	683	-
Stage 2	-	0	0	-	664	-
Platoon blocked, %	-			-		
Mov Cap-1 Maneuver	-	-	-	-	350	658
Mov Cap-2 Maneuver	-	-	-	-	350	-
Stage 1	-	-	-	-	683	-
Stage 2	-	-	-	-	664	-

Approach	EB	WB	NB
HCM Control Delay, s	0	0	0
HCM LOS			A

Minor Lane/Major Mvmt	NBLn1	EBT	WBT
Capacity (veh/h)	-	-	-
HCM Lane V/C Ratio	-	-	-
HCM Control Delay (s)	0	-	-
HCM Lane LOS	A	-	-
HCM 95th %tile Q(veh)	-	-	-

Movement	EBL	EBT	EBR	WBL	WBT	WBR	NBL	NBT	NBR	SBL	SBT	SBR
Lane Configurations												
Traffic Volume (veh/h)	50	240	70	30	260	40	50	25	20	55	30	75
Future Volume (veh/h)	50	240	70	30	260	40	50	25	20	55	30	75
Initial Q (Qb), veh	0	0	0	0	0	0	0	0	0	0	0	0
Ped-Bike Adj(A_pbT)	1.00		1.00	1.00		1.00	1.00		1.00	1.00		1.00
Parking Bus, Adj	1.00	1.00	1.00	1.00	1.00	1.00	1.00	1.00	1.00	1.00	1.00	1.00
Work Zone On Approach		No			No			No			No	
Adj Sat Flow, veh/h/ln	1870	1870	1870	1856	1856	1856	1870	1870	1870	1885	1885	1885
Adj Flow Rate, veh/h	54	261	76	33	283	43	54	27	22	60	33	82
Peak Hour Factor	0.92	0.92	0.92	0.92	0.92	0.92	0.92	0.92	0.92	0.92	0.92	0.92
Percent Heavy Veh, %	2	2	2	3	3	3	2	2	2	1	1	1
Cap, veh/h	572	472	137	533	629	533	393	153	78	683	113	281
Arrive On Green	0.34	0.34	0.34	0.34	0.34	0.34	0.24	0.24	0.24	0.24	0.24	0.24
Sat Flow, veh/h	1054	1392	405	1035	1856	1572	567	650	331	1367	479	1191
Grp Volume(v), veh/h	54	0	337	33	283	43	103	0	0	60	0	115
Grp Sat Flow(s),veh/h/ln	1054	0	1797	1035	1856	1572	1548	0	0	1367	0	1671
Q Serve(g_s), s	0.9	0.0	3.2	0.6	2.5	0.4	0.0	0.0	0.0	0.0	0.0	1.2
Cycle Q Clear(g_c), s	3.4	0.0	3.2	3.8	2.5	0.4	1.0	0.0	0.0	0.6	0.0	1.2
Prop In Lane	1.00		0.23	1.00		1.00	0.52		0.21	1.00		0.71
Lane Grp Cap(c), veh/h	572	0	609	533	629	533	625	0	0	683	0	395
V/C Ratio(X)	0.09	0.00	0.55	0.06	0.45	0.08	0.16	0.00	0.00	0.09	0.00	0.29
Avail Cap(c_a), veh/h	1111	0	1528	1062	1578	1337	1521	0	0	1522	0	1420
HCM Platoon Ratio	1.00	1.00	1.00	1.00	1.00	1.00	1.00	1.00	1.00	1.00	1.00	1.00
Upstream Filter(I)	1.00	0.00	1.00	1.00	1.00	1.00	1.00	0.00	0.00	1.00	0.00	1.00
Uniform Delay (d), s/veh	6.8	0.0	5.7	7.2	5.5	4.8	6.6	0.0	0.0	6.4	0.0	6.6
Incr Delay (d2), s/veh	0.1	0.0	0.8	0.0	0.5	0.1	0.1	0.0	0.0	0.1	0.0	0.4
Initial Q Delay(d3),s/veh	0.0	0.0	0.0	0.0	0.0	0.0	0.0	0.0	0.0	0.0	0.0	0.0
%ile BackOfQ(95%),veh/ln	0.2	0.0	1.0	0.1	0.6	0.1	0.4	0.0	0.0	0.2	0.0	0.5
Unsig. Movement Delay, s/veh												
LnGrp Delay(d),s/veh	6.9	0.0	6.5	7.3	6.0	4.8	6.7	0.0	0.0	6.4	0.0	7.0
LnGrp LOS	A	A	A	A	A	A	A	A	A	A	A	A
Approach Vol, veh/h		391			359			103			175	
Approach Delay, s/veh		6.5			6.0			6.7			6.8	
Approach LOS		A			A			A			A	

Timer - Assigned Phs		2		4		6		8				
Phs Duration (G+Y+Rc), s		9.5		11.7		9.5		11.7				
Change Period (Y+Rc), s		4.5		4.5		4.5		4.5				
Max Green Setting (Gmax), s		18.0		18.0		18.0		18.0				
Max Q Clear Time (g_c+I1), s		3.0		5.4		3.2		5.8				
Green Ext Time (p_c), s		0.4		1.8		0.7		1.5				

Intersection Summary	
HCM 6th Ctrl Delay	6.4
HCM 6th LOS	A

HCM 6th Signalized Intersection Summary
1: Jackson Dr & WIS-60

05/19/2020

Movement	EBL	EBT	EBR	WBL	WBT	WBR	NBL	NBT	NBR	SBL	SBT	SBR
Lane Configurations												
Traffic Volume (veh/h)	70	480	30	40	455	45	115	55	60	85	25	185
Future Volume (veh/h)	70	480	30	40	455	45	115	55	60	85	25	185
Initial Q (Qb), veh	0	0	0	0	0	0	0	0	0	0	0	0
Ped-Bike Adj(A_pbT)	1.00		1.00	1.00		1.00	1.00		0.97	1.00		0.99
Parking Bus, Adj	1.00	1.00	1.00	1.00	1.00	1.00	1.00	1.00	1.00	1.00	1.00	1.00
Work Zone On Approach		No			No			No			No	
Adj Sat Flow, veh/h/ln	1752	1554	1554	1767	1767	1767	1826	1619	1619	1856	1646	1646
Adj Flow Rate, veh/h	73	500	31	42	474	47	120	57	62	89	26	193
Peak Hour Factor	0.96	0.96	0.96	0.96	0.96	0.96	0.96	0.96	0.96	0.96	0.96	0.96
Percent Heavy Veh, %	10	10	10	9	9	9	5	5	5	3	3	3
Cap, veh/h	420	828	51	81	584	56	252	190	207	356	46	340
Arrive On Green	0.08	0.57	0.57	0.40	0.40	0.40	0.27	0.27	0.27	0.27	0.27	0.27
Sat Flow, veh/h	1668	1447	90	74	1445	138	1131	698	759	1258	168	1245
Grp Volume(v), veh/h	73	0	531	563	0	0	120	0	119	89	0	219
Grp Sat Flow(s),veh/h/ln	1668	0	1537	1657	0	0	1131	0	1457	1258	0	1413
Q Serve(g_s), s	1.7	0.0	17.2	11.1	0.0	0.0	7.8	0.0	4.9	4.6	0.0	10.1
Cycle Q Clear(g_c), s	1.7	0.0	17.2	23.0	0.0	0.0	17.9	0.0	4.9	9.5	0.0	10.1
Prop In Lane	1.00		0.06	0.07		0.08	1.00		0.52	1.00		0.88
Lane Grp Cap(c), veh/h	420	0	879	720	0	0	252	0	397	356	0	385
V/C Ratio(X)	0.17	0.00	0.60	0.78	0.00	0.00	0.48	0.00	0.30	0.25	0.00	0.57
Avail Cap(c_a), veh/h	830	0	1546	1021	0	0	464	0	670	592	0	650
HCM Platoon Ratio	1.00	1.00	1.00	1.00	1.00	1.00	1.00	1.00	1.00	1.00	1.00	1.00
Upstream Filter(I)	1.00	0.00	1.00	1.00	0.00	0.00	1.00	0.00	1.00	1.00	0.00	1.00
Uniform Delay (d), s/veh	9.4	0.0	10.6	20.1	0.0	0.0	31.5	0.0	21.9	25.7	0.0	23.8
Incr Delay (d2), s/veh	0.1	0.0	1.0	3.4	0.0	0.0	0.5	0.0	0.2	0.1	0.0	0.5
Initial Q Delay(d3),s/veh	0.0	0.0	0.0	0.0	0.0	0.0	0.0	0.0	0.0	0.0	0.0	0.0
%ile BackOfQ(95%),veh/ln	1.1	0.0	9.2	14.0	0.0	0.0	3.8	0.0	3.0	2.4	0.0	6.0
Unsig. Movement Delay, s/veh												
LnGrp Delay(d),s/veh	9.5	0.0	11.6	23.5	0.0	0.0	32.0	0.0	22.1	25.8	0.0	24.3
LnGrp LOS	A	A	B	C	A	A	C	A	C	C	A	C
Approach Vol, veh/h		604			563			239			308	
Approach Delay, s/veh		11.4			23.5			27.1			24.7	
Approach LOS		B			C			C			C	

Timer - Assigned Phs	1	2		4		6		8
Phs Duration (G+Y+Rc), s	12.8	36.0		27.2		48.8		27.2
Change Period (Y+Rc), s	6.5	* 5.3		6.5		* 5.3		6.5
Max Green Setting (Gmax), s	25.0	* 45		35.0		* 77		35.0
Max Q Clear Time (g_c+I1), s	3.7	25.0		19.9		19.2		12.1
Green Ext Time (p_c), s	0.0	5.8		0.5		6.7		0.8

Intersection Summary	
HCM 6th Ctrl Delay	19.9
HCM 6th LOS	B

Notes

* HCM 6th computational engine requires equal clearance times for the phases crossing the barrier.

Intersection	
Int Delay, s/veh	2.8

Movement	EBL	EBT	WBT	WBR	SBL	SBR
Lane Configurations						
Traffic Vol, veh/h	80	545	475	35	40	65
Future Vol, veh/h	80	545	475	35	40	65
Conflicting Peds, #/hr	0	0	0	0	0	0
Sign Control	Free	Free	Free	Free	Stop	Stop
RT Channelized	-	None	-	None	-	None
Storage Length	-	-	-	-	0	-
Veh in Median Storage, #	-	0	0	-	0	-
Grade, %	-	0	0	-	0	-
Peak Hour Factor	92	92	92	92	92	92
Heavy Vehicles, %	4	4	9	9	2	2
Mvmt Flow	87	592	516	38	43	71

Major/Minor	Major1		Major2		Minor2	
Conflicting Flow All	554	0	-	0	1301	535
Stage 1	-	-	-	-	535	-
Stage 2	-	-	-	-	766	-
Critical Hdwy	4.14	-	-	-	6.42	6.22
Critical Hdwy Stg 1	-	-	-	-	5.42	-
Critical Hdwy Stg 2	-	-	-	-	5.42	-
Follow-up Hdwy	2.236	-	-	-	3.518	3.318
Pot Cap-1 Maneuver	1006	-	-	-	178	545
Stage 1	-	-	-	-	587	-
Stage 2	-	-	-	-	459	-
Platoon blocked, %		-	-	-		
Mov Cap-1 Maneuver	1006	-	-	-	155	545
Mov Cap-2 Maneuver	-	-	-	-	155	-
Stage 1	-	-	-	-	511	-
Stage 2	-	-	-	-	459	-

Approach	EB	WB	SB
HCM Control Delay, s	1.1	0	26.7
HCM LOS			D

Minor Lane/Major Mvmt	EBL	EBT	WBT	WBR	SBLn1
Capacity (veh/h)	1006	-	-	-	278
HCM Lane V/C Ratio	0.086	-	-	-	0.411
HCM Control Delay (s)	8.9	0	-	-	26.7
HCM Lane LOS	A	A	-	-	D
HCM 95th %tile Q(veh)	0.3	-	-	-	1.9

Movement	EBL	EBT	EBR	WBL	WBT	WBR	NBL	NBT	NBR	SBL	SBT	SBR
Lane Configurations												
Traffic Volume (veh/h)	10	430	145	40	340	15	110	0	30	75	0	60
Future Volume (veh/h)	10	430	145	40	340	15	110	0	30	75	0	60
Initial Q (Qb), veh	0	0	0	0	0	0	0	0	0	0	0	0
Ped-Bike Adj(A_pbT)	1.00		0.98	1.00		1.00	1.00		1.00	1.00		1.00
Parking Bus, Adj	1.00	1.00	1.00	1.00	1.00	1.00	1.00	1.00	1.00	1.00	1.00	1.00
Work Zone On Approach		No			No			No			No	
Adj Sat Flow, veh/h/ln	1841	1700	1700	1811	1673	1673	1723	1723	1870	1736	1736	1736
Adj Flow Rate, veh/h	12	512	173	48	405	18	131	0	36	89	0	71
Peak Hour Factor	0.84	0.84	0.84	0.84	0.84	0.84	0.84	0.84	0.84	0.84	0.84	0.84
Percent Heavy Veh, %	4	4	4	6	6	6	2	2	2	1	1	1
Cap, veh/h	558	641	217	342	844	38	492	0	335	259	35	107
Arrive On Green	0.53	0.53	0.53	0.53	0.53	0.53	0.21	0.00	0.21	0.21	0.00	0.21
Sat Flow, veh/h	949	1208	408	733	1590	71	1352	0	1585	466	166	505
Grp Volume(v), veh/h	12	0	685	48	0	423	131	0	36	160	0	0
Grp Sat Flow(s),veh/h/ln	949	0	1617	733	0	1660	1352	0	1585	1137	0	0
Q Serve(g_s), s	0.3	0.0	12.1	2.0	0.0	5.6	0.0	0.0	0.6	2.2	0.0	0.0
Cycle Q Clear(g_c), s	5.9	0.0	12.1	14.0	0.0	5.6	2.8	0.0	0.6	5.0	0.0	0.0
Prop In Lane	1.00		0.25	1.00		0.04	1.00		1.00	0.56		0.44
Lane Grp Cap(c), veh/h	558	0	858	342	0	881	492	0	335	401	0	0
V/C Ratio(X)	0.02	0.00	0.80	0.14	0.00	0.48	0.27	0.00	0.11	0.40	0.00	0.00
Avail Cap(c_a), veh/h	882	0	1411	593	0	1449	951	0	930	909	0	0
HCM Platoon Ratio	1.00	1.00	1.00	1.00	1.00	1.00	1.00	1.00	1.00	1.00	1.00	1.00
Upstream Filter(I)	1.00	0.00	1.00	1.00	0.00	1.00	1.00	0.00	1.00	1.00	0.00	0.00
Uniform Delay (d), s/veh	7.0	0.0	6.7	12.4	0.0	5.2	12.0	0.0	11.1	12.9	0.0	0.0
Incr Delay (d2), s/veh	0.0	0.0	1.8	0.2	0.0	0.4	0.3	0.0	0.1	0.6	0.0	0.0
Initial Q Delay(d3),s/veh	0.0	0.0	0.0	0.0	0.0	0.0	0.0	0.0	0.0	0.0	0.0	0.0
%ile BackOfQ(95%),veh/ln	0.1	0.0	3.8	0.5	0.0	1.6	1.3	0.0	0.3	1.8	0.0	0.0
Unsig. Movement Delay, s/veh												
LnGrp Delay(d),s/veh	7.0	0.0	8.4	12.6	0.0	5.6	12.3	0.0	11.3	13.5	0.0	0.0
LnGrp LOS	A	A	A	B	A	A	B	A	B	B	A	A
Approach Vol, veh/h		697			471			167			160	
Approach Delay, s/veh		8.4			6.3			12.0			13.5	
Approach LOS		A			A			B			B	

Timer - Assigned Phs	2	4	6	8
Phs Duration (G+Y+Rc), s	11.9	23.0	11.9	23.0
Change Period (Y+Rc), s	4.5	4.5	4.5	4.5
Max Green Setting (Gmax), s	20.5	30.5	20.5	30.5
Max Q Clear Time (g_c+I1), s	4.8	14.1	7.0	16.0
Green Ext Time (p_c), s	0.7	4.5	0.7	2.5

Intersection Summary	
HCM 6th Ctrl Delay	8.7
HCM 6th LOS	A

Intersection	
Int Delay, s/veh	0.3

Movement	EBL	EBT	WBT	WBR	SBL	SBR
Lane Configurations		↑	↑		⋔	
Traffic Vol, veh/h	25	510	385	5	0	10
Future Vol, veh/h	25	510	385	5	0	10
Conflicting Peds, #/hr	0	0	0	0	0	0
Sign Control	Free	Free	Free	Free	Stop	Stop
RT Channelized	-	None	-	None	-	None
Storage Length	-	-	-	-	0	-
Veh in Median Storage, #	-	0	0	-	0	-
Grade, %	-	0	0	-	0	-
Peak Hour Factor	92	92	92	92	92	92
Heavy Vehicles, %	6	6	6	6	2	2
Mvmt Flow	27	554	418	5	0	11

Major/Minor	Major1		Major2		Minor2	
Conflicting Flow All	423	0	-	0	1029	421
Stage 1	-	-	-	-	421	-
Stage 2	-	-	-	-	608	-
Critical Hdwy	4.16	-	-	-	6.42	6.22
Critical Hdwy Stg 1	-	-	-	-	5.42	-
Critical Hdwy Stg 2	-	-	-	-	5.42	-
Follow-up Hdwy	2.254	-	-	-	3.518	3.318
Pot Cap-1 Maneuver	1115	-	-	-	259	632
Stage 1	-	-	-	-	662	-
Stage 2	-	-	-	-	543	-
Platoon blocked, %		-	-	-		
Mov Cap-1 Maneuver	1115	-	-	-	250	632
Mov Cap-2 Maneuver	-	-	-	-	250	-
Stage 1	-	-	-	-	639	-
Stage 2	-	-	-	-	543	-

Approach	EB	WB	SB
HCM Control Delay, s	0.4	0	10.8
HCM LOS			B

Minor Lane/Major Mvmt	EBL	EBT	WBT	WBR	SBLn1
Capacity (veh/h)	1115	-	-	-	632
HCM Lane V/C Ratio	0.024	-	-	-	0.017
HCM Control Delay (s)	8.3	-	-	-	10.8
HCM Lane LOS	A	-	-	-	B
HCM 95th %tile Q(veh)	0.1	-	-	-	0.1

Intersection	
Int Delay, s/veh	0

Movement	EBT	EBR	WBL	WBT	NBL	NBR
Lane Configurations	↑			↑	⋔	
Traffic Vol, veh/h	510	0	0	390	0	0
Future Vol, veh/h	510	0	0	390	0	0
Conflicting Peds, #/hr	0	0	0	0	0	0
Sign Control	Free	Free	Free	Free	Stop	Stop
RT Channelized	-	None	-	None	-	None
Storage Length	-	-	-	-	0	-
Veh in Median Storage, #	0	-	-	0	0	-
Grade, %	0	-	-	0	0	-
Peak Hour Factor	92	92	92	92	92	92
Heavy Vehicles, %	6	6	6	6	2	2
Mvmt Flow	554	0	0	424	0	0

Major/Minor	Major1		Major2		Minor1	
Conflicting Flow All	0	-	-	-	978	554
Stage 1	-	-	-	-	554	-
Stage 2	-	-	-	-	424	-
Critical Hdwy	-	-	-	-	6.42	6.22
Critical Hdwy Stg 1	-	-	-	-	5.42	-
Critical Hdwy Stg 2	-	-	-	-	5.42	-
Follow-up Hdwy	-	-	-	-	3.518	3.318
Pot Cap-1 Maneuver	-	0	0	-	278	532
Stage 1	-	0	0	-	575	-
Stage 2	-	0	0	-	660	-
Platoon blocked, %	-			-		
Mov Cap-1 Maneuver	-	-	-	-	278	532
Mov Cap-2 Maneuver	-	-	-	-	278	-
Stage 1	-	-	-	-	575	-
Stage 2	-	-	-	-	660	-

Approach	EB	WB	NB
HCM Control Delay, s	0	0	0
HCM LOS			A

Minor Lane/Major Mvmt	NBLn1	EBT	WBT
Capacity (veh/h)	-	-	-
HCM Lane V/C Ratio	-	-	-
HCM Control Delay (s)	0	-	-
HCM Lane LOS	A	-	-
HCM 95th %tile Q(veh)	-	-	-

Movement	EBL	EBT	EBR	WBL	WBT	WBR	NBL	NBT	NBR	SBL	SBT	SBR
Lane Configurations												
Traffic Volume (veh/h)	75	385	50	35	280	90	35	25	50	80	15	75
Future Volume (veh/h)	75	385	50	35	280	90	35	25	50	80	15	75
Initial Q (Qb), veh	0	0	0	0	0	0	0	0	0	0	0	0
Ped-Bike Adj(A_pbT)	1.00		1.00	1.00		1.00	1.00		1.00	1.00		1.00
Parking Bus, Adj	1.00	1.00	1.00	1.00	1.00	1.00	1.00	1.00	1.00	1.00	1.00	1.00
Work Zone On Approach		No			No			No			No	
Adj Sat Flow, veh/h/ln	1811	1673	1673	1841	1736	1841	1654	1654	1654	1811	1668	1668
Adj Flow Rate, veh/h	89	458	60	42	333	107	42	30	60	95	18	89
Peak Hour Factor	0.84	0.84	0.84	0.84	0.84	0.84	0.84	0.84	0.84	0.84	0.84	0.84
Percent Heavy Veh, %	6	6	6	4	4	4	7	7	7	6	6	6
Cap, veh/h	363	569	75	232	682	612	243	176	276	714	107	530
Arrive On Green	0.39	0.39	0.39	0.39	0.39	0.39	0.44	0.44	0.44	0.44	0.44	0.44
Sat Flow, veh/h	919	1449	190	869	1736	1558	352	402	628	1265	244	1207
Grp Volume(v), veh/h	89	0	518	42	333	107	132	0	0	95	0	107
Grp Sat Flow(s),veh/h/ln	919	0	1638	869	1736	1558	1382	0	0	1265	0	1451
Q Serve(g_s), s	4.3	0.0	15.0	2.4	7.7	2.4	0.0	0.0	0.0	0.0	0.0	2.4
Cycle Q Clear(g_c), s	12.0	0.0	15.0	17.4	7.7	2.4	2.8	0.0	0.0	1.8	0.0	2.4
Prop In Lane	1.00		0.12	1.00		1.00	0.32		0.45	1.00		0.83
Lane Grp Cap(c), veh/h	363	0	644	232	682	612	695	0	0	714	0	637
V/C Ratio(X)	0.25	0.00	0.80	0.18	0.49	0.17	0.19	0.00	0.00	0.13	0.00	0.17
Avail Cap(c_a), veh/h	474	0	842	337	892	800	695	0	0	714	0	637
HCM Platoon Ratio	1.00	1.00	1.00	1.00	1.00	1.00	1.00	1.00	1.00	1.00	1.00	1.00
Upstream Filter(I)	1.00	0.00	1.00	1.00	1.00	1.00	1.00	0.00	0.00	1.00	0.00	1.00
Uniform Delay (d), s/veh	16.7	0.0	14.4	22.2	12.2	10.6	9.2	0.0	0.0	8.9	0.0	9.1
Incr Delay (d2), s/veh	0.3	0.0	4.4	0.4	0.5	0.1	0.6	0.0	0.0	0.4	0.0	0.6
Initial Q Delay(d3),s/veh	0.0	0.0	0.0	0.0	0.0	0.0	0.0	0.0	0.0	0.0	0.0	0.0
%ile BackOfQ(95%),veh/ln	1.5	0.0	9.2	0.8	4.6	1.3	1.7	0.0	0.0	1.2	0.0	1.4
Unsig. Movement Delay, s/veh												
LnGrp Delay(d),s/veh	17.1	0.0	18.8	22.5	12.7	10.7	9.8	0.0	0.0	9.3	0.0	9.7
LnGrp LOS	B	A	B	C	B	B	A	A	A	A	A	A
Approach Vol, veh/h		607			482			132			202	
Approach Delay, s/veh		18.5			13.2			9.8			9.5	
Approach LOS		B			B			A			A	

Timer - Assigned Phs		2		4		6		8				
Phs Duration (G+Y+Rc), s		28.0		25.5		28.0		25.5				
Change Period (Y+Rc), s		4.5		4.5		4.5		4.5				
Max Green Setting (Gmax), s		23.5		27.5		23.5		27.5				
Max Q Clear Time (g_c+I1), s		4.8		17.0		4.4		19.4				
Green Ext Time (p_c), s		0.7		2.9		0.9		1.6				

Intersection Summary												
HCM 6th Ctrl Delay			14.6									
HCM 6th LOS			B									

HCM 6th Signalized Intersection Summary
1: Jackson Dr & WIS-60

05/19/2020

Movement	EBL	EBT	EBR	WBL	WBT	WBR	NBL	NBT	NBR	SBL	SBT	SBR
Lane Configurations												
Traffic Volume (veh/h)	180	565	125	50	490	100	75	80	55	85	65	105
Future Volume (veh/h)	180	565	125	50	490	100	75	80	55	85	65	105
Initial Q (Qb), veh	0	0	0	0	0	0	0	0	0	0	0	0
Ped-Bike Adj(A_pbT)	1.00		0.98	1.00		0.98	0.99		0.99	0.99		0.97
Parking Bus, Adj	1.00	1.00	1.00	1.00	1.00	1.00	1.00	1.00	1.00	1.00	1.00	1.00
Work Zone On Approach		No			No			No			No	
Adj Sat Flow, veh/h/ln	1856	1646	1646	1841	1841	1841	1856	1646	1646	1885	1672	1672
Adj Flow Rate, veh/h	194	608	134	54	527	108	81	86	59	91	70	113
Peak Hour Factor	0.93	0.93	0.93	0.93	0.93	0.93	0.93	0.93	0.93	0.93	0.93	0.93
Percent Heavy Veh, %	3	3	3	4	4	4	3	3	3	1	1	1
Cap, veh/h	438	833	184	86	610	121	212	196	135	254	122	197
Arrive On Green	0.10	0.64	0.64	0.47	0.47	0.47	0.22	0.22	0.22	0.22	0.22	0.22
Sat Flow, veh/h	1767	1300	287	84	1308	259	1185	906	621	1245	564	910
Grp Volume(v), veh/h	194	0	742	689	0	0	81	0	145	91	0	183
Grp Sat Flow(s),veh/h/ln	1767	0	1587	1651	0	0	1185	0	1527	1245	0	1474
Q Serve(g_s), s	4.2	0.0	26.1	18.7	0.0	0.0	5.4	0.0	6.8	5.6	0.0	9.2
Cycle Q Clear(g_c), s	4.2	0.0	26.1	31.1	0.0	0.0	14.6	0.0	6.8	12.4	0.0	9.2
Prop In Lane	1.00		0.18	0.08		0.16	1.00		0.41	1.00		0.62
Lane Grp Cap(c), veh/h	438	0	1017	818	0	0	212	0	331	254	0	319
V/C Ratio(X)	0.44	0.00	0.73	0.84	0.00	0.00	0.38	0.00	0.44	0.36	0.00	0.57
Avail Cap(c_a), veh/h	803	0	1467	940	0	0	457	0	646	511	0	624
HCM Platoon Ratio	1.00	1.00	1.00	1.00	1.00	1.00	1.00	1.00	1.00	1.00	1.00	1.00
Upstream Filter(I)	1.00	0.00	1.00	1.00	0.00	0.00	1.00	0.00	1.00	1.00	0.00	1.00
Uniform Delay (d), s/veh	7.9	0.0	10.0	19.7	0.0	0.0	35.5	0.0	28.1	33.4	0.0	29.0
Incr Delay (d2), s/veh	0.3	0.0	1.5	6.8	0.0	0.0	0.4	0.0	0.3	0.3	0.0	0.6
Initial Q Delay(d3),s/veh	0.0	0.0	0.0	0.0	0.0	0.0	0.0	0.0	0.0	0.0	0.0	0.0
%ile BackOfQ(95%),veh/ln	2.7	0.0	13.0	18.6	0.0	0.0	2.8	0.0	4.5	3.1	0.0	5.9
Unsig. Movement Delay, s/veh												
LnGrp Delay(d),s/veh	8.2	0.0	11.6	26.5	0.0	0.0	35.9	0.0	28.4	33.8	0.0	29.6
LnGrp LOS	A	A	B	C	A	A	D	A	C	C	A	C
Approach Vol, veh/h		936			689			226			274	
Approach Delay, s/veh		10.9			26.5			31.1			31.0	
Approach LOS		B			C			C			C	

Timer - Assigned Phs	1	2		4		6		8
Phs Duration (G+Y+Rc), s	14.4	43.9		24.4		58.3		24.4
Change Period (Y+Rc), s	6.5	* 5.3		6.5		* 5.3		6.5
Max Green Setting (Gmax), s	25.0	* 45		35.0		* 77		35.0
Max Q Clear Time (g_c+I1), s	6.2	33.1		16.6		28.1		14.4
Green Ext Time (p_c), s	0.2	5.5		0.5		11.1		0.7

Intersection Summary	
HCM 6th Ctrl Delay	20.7
HCM 6th LOS	C

Notes

* HCM 6th computational engine requires equal clearance times for the phases crossing the barrier.

Intersection	
Int Delay, s/veh	1.4

Movement	EBL	EBT	WBT	WBR	SBL	SBR
Lane Configurations						
Traffic Vol, veh/h	35	670	610	10	25	30
Future Vol, veh/h	35	670	610	10	25	30
Conflicting Peds, #/hr	0	0	0	0	0	0
Sign Control	Free	Free	Free	Free	Stop	Stop
RT Channelized	-	None	-	None	-	None
Storage Length	-	-	-	-	0	-
Veh in Median Storage, #	-	0	0	-	0	-
Grade, %	-	0	0	-	0	-
Peak Hour Factor	92	92	92	92	92	92
Heavy Vehicles, %	3	3	4	4	2	2
Mvmt Flow	38	728	663	11	27	33

Major/Minor	Major1		Major2		Minor2	
Conflicting Flow All	674	0	-	0	1473	669
Stage 1	-	-	-	-	669	-
Stage 2	-	-	-	-	804	-
Critical Hdwy	4.13	-	-	-	6.42	6.22
Critical Hdwy Stg 1	-	-	-	-	5.42	-
Critical Hdwy Stg 2	-	-	-	-	5.42	-
Follow-up Hdwy	2.227	-	-	-	3.518	3.318
Pot Cap-1 Maneuver	912	-	-	-	140	458
Stage 1	-	-	-	-	509	-
Stage 2	-	-	-	-	440	-
Platoon blocked, %		-	-	-		
Mov Cap-1 Maneuver	912	-	-	-	130	458
Mov Cap-2 Maneuver	-	-	-	-	130	-
Stage 1	-	-	-	-	473	-
Stage 2	-	-	-	-	440	-

Approach	EB	WB	SB
HCM Control Delay, s	0.5	0	28.4
HCM LOS			D

Minor Lane/Major Mvmt	EBL	EBT	WBT	WBR	SBLn1
Capacity (veh/h)	912	-	-	-	213
HCM Lane V/C Ratio	0.042	-	-	-	0.281
HCM Control Delay (s)	9.1	0	-	-	28.4
HCM Lane LOS	A	A	-	-	D
HCM 95th %tile Q(veh)	0.1	-	-	-	1.1

Movement	EBL	EBT	EBR	WBL	WBT	WBR	NBL	NBT	NBR	SBL	SBT	SBR
Lane Configurations												
Traffic Volume (veh/h)	50	450	195	40	420	45	190	0	60	20	0	10
Future Volume (veh/h)	50	450	195	40	420	45	190	0	60	20	0	10
Initial Q (Qb), veh	0	0	0	0	0	0	0	0	0	0	0	0
Ped-Bike Adj(A_pbT)	1.00		1.00	1.00		1.00	1.00		1.00	1.00		1.00
Parking Bus, Adj	1.00	1.00	1.00	1.00	1.00	1.00	1.00	1.00	1.00	1.00	1.00	1.00
Work Zone On Approach		No			No			No			No	
Adj Sat Flow, veh/h/ln	1856	1714	1714	1841	1700	1700	1723	1723	1870	1736	1736	1736
Adj Flow Rate, veh/h	57	517	224	46	483	52	218	0	69	23	0	11
Peak Hour Factor	0.87	0.87	0.87	0.87	0.87	0.87	0.87	0.87	0.87	0.87	0.87	0.87
Percent Heavy Veh, %	3	3	3	4	4	4	2	2	2	1	1	1
Cap, veh/h	359	576	250	188	767	83	556	0	542	279	18	94
Arrive On Green	0.51	0.51	0.51	0.51	0.51	0.51	0.34	0.00	0.34	0.34	0.00	0.34
Sat Flow, veh/h	862	1134	491	707	1508	162	1276	0	1585	524	52	275
Grp Volume(v), veh/h	57	0	741	46	0	535	218	0	69	34	0	0
Grp Sat Flow(s),veh/h/ln	862	0	1625	707	0	1671	1276	0	1585	851	0	0
Q Serve(g_s), s	3.1	0.0	24.7	3.8	0.0	13.9	0.0	0.0	1.8	0.2	0.0	0.0
Cycle Q Clear(g_c), s	17.0	0.0	24.7	28.5	0.0	13.9	8.3	0.0	1.8	8.5	0.0	0.0
Prop In Lane	1.00		0.30	1.00		0.10	1.00		1.00	0.68		0.32
Lane Grp Cap(c), veh/h	359	0	826	188	0	849	556	0	542	391	0	0
V/C Ratio(X)	0.16	0.00	0.90	0.24	0.00	0.63	0.39	0.00	0.13	0.09	0.00	0.00
Avail Cap(c_a), veh/h	359	0	826	188	0	849	556	0	542	391	0	0
HCM Platoon Ratio	1.00	1.00	1.00	1.00	1.00	1.00	1.00	1.00	1.00	1.00	1.00	1.00
Upstream Filter(I)	1.00	0.00	1.00	1.00	0.00	1.00	1.00	0.00	1.00	1.00	0.00	0.00
Uniform Delay (d), s/veh	16.8	0.0	13.3	26.2	0.0	10.7	15.7	0.0	13.6	13.7	0.0	0.0
Incr Delay (d2), s/veh	0.2	0.0	12.5	0.7	0.0	1.5	2.1	0.0	0.5	0.4	0.0	0.0
Initial Q Delay(d3),s/veh	0.0	0.0	0.0	0.0	0.0	0.0	0.0	0.0	0.0	0.0	0.0	0.0
%ile BackOfQ(95%),veh/ln	1.0	0.0	14.9	1.1	0.0	7.8	4.4	0.0	1.2	0.6	0.0	0.0
Unsig. Movement Delay, s/veh												
LnGrp Delay(d),s/veh	17.0	0.0	25.9	26.9	0.0	12.2	17.8	0.0	14.1	14.2	0.0	0.0
LnGrp LOS	B	A	C	C	A	B	B	A	B	B	A	A
Approach Vol, veh/h		798			581			287			34	
Approach Delay, s/veh		25.2			13.3			16.9			14.2	
Approach LOS		C			B			B			B	

Timer - Assigned Phs		2		4		6		8				
Phs Duration (G+Y+Rc), s		25.0		35.0		25.0		35.0				
Change Period (Y+Rc), s		4.5		4.5		4.5		4.5				
Max Green Setting (Gmax), s		20.5		30.5		20.5		30.5				
Max Q Clear Time (g_c+I1), s		10.3		26.7		10.5		30.5				
Green Ext Time (p_c), s		1.0		1.9		0.1		0.0				

Intersection Summary												
HCM 6th Ctrl Delay			19.5									
HCM 6th LOS			B									

Intersection	
Int Delay, s/veh	0.2

Movement	EBL	EBT	WBT	WBR	SBL	SBR
Lane Configurations		↑	↑		⋔	
Traffic Vol, veh/h	0	530	495	0	5	10
Future Vol, veh/h	0	530	495	0	5	10
Conflicting Peds, #/hr	0	0	0	0	0	0
Sign Control	Free	Free	Free	Free	Stop	Stop
RT Channelized	-	None	-	None	-	None
Storage Length	-	-	-	-	0	-
Veh in Median Storage, #	-	0	0	-	0	-
Grade, %	-	0	0	-	0	-
Peak Hour Factor	92	92	92	92	92	92
Heavy Vehicles, %	2	2	4	4	2	2
Mvmt Flow	0	576	538	0	5	11

Major/Minor	Major1		Major2		Minor2	
Conflicting Flow All	-	0	-	0	1114	538
Stage 1	-	-	-	-	538	-
Stage 2	-	-	-	-	576	-
Critical Hdwy	-	-	-	-	6.42	6.22
Critical Hdwy Stg 1	-	-	-	-	5.42	-
Critical Hdwy Stg 2	-	-	-	-	5.42	-
Follow-up Hdwy	-	-	-	-	3.518	3.318
Pot Cap-1 Maneuver	0	-	-	0	230	543
Stage 1	0	-	-	0	585	-
Stage 2	0	-	-	0	562	-
Platoon blocked, %		-	-			
Mov Cap-1 Maneuver	-	-	-	-	230	543
Mov Cap-2 Maneuver	-	-	-	-	230	-
Stage 1	-	-	-	-	585	-
Stage 2	-	-	-	-	562	-

Approach	EB	WB	SB
HCM Control Delay, s	0	0	15.1
HCM LOS			C

Minor Lane/Major Mvmt	EBT	WBT	SBLn1
Capacity (veh/h)	-	-	374
HCM Lane V/C Ratio	-	-	0.044
HCM Control Delay (s)	-	-	15.1
HCM Lane LOS	-	-	C
HCM 95th %tile Q(veh)	-	-	0.1

Intersection	
Int Delay, s/veh	0

Movement	EBT	EBR	WBL	WBT	NBL	NBR
Lane Configurations	↑			↑	⋔	
Traffic Vol, veh/h	535	0	0	495	0	0
Future Vol, veh/h	535	0	0	495	0	0
Conflicting Peds, #/hr	0	0	0	0	0	0
Sign Control	Free	Free	Free	Free	Stop	Stop
RT Channelized	-	None	-	None	-	None
Storage Length	-	-	-	-	0	-
Veh in Median Storage, #	0	-	-	0	0	-
Grade, %	0	-	-	0	0	-
Peak Hour Factor	92	92	92	92	92	92
Heavy Vehicles, %	2	2	4	4	2	2
Mvmt Flow	582	0	0	538	0	0

Major/Minor	Major1		Major2		Minor1	
Conflicting Flow All	0	-	-	-	1120	582
Stage 1	-	-	-	-	582	-
Stage 2	-	-	-	-	538	-
Critical Hdwy	-	-	-	-	6.42	6.22
Critical Hdwy Stg 1	-	-	-	-	5.42	-
Critical Hdwy Stg 2	-	-	-	-	5.42	-
Follow-up Hdwy	-	-	-	-	3.518	3.318
Pot Cap-1 Maneuver	-	0	0	-	228	513
Stage 1	-	0	0	-	559	-
Stage 2	-	0	0	-	585	-
Platoon blocked, %	-			-		
Mov Cap-1 Maneuver	-	-	-	-	228	513
Mov Cap-2 Maneuver	-	-	-	-	228	-
Stage 1	-	-	-	-	559	-
Stage 2	-	-	-	-	585	-

Approach	EB	WB	NB
HCM Control Delay, s	0	0	0
HCM LOS			A

Minor Lane/Major Mvmt	NBLn1	EBT	WBT
Capacity (veh/h)	-	-	-
HCM Lane V/C Ratio	-	-	-
HCM Control Delay (s)	0	-	-
HCM Lane LOS	A	-	-
HCM 95th %tile Q(veh)	-	-	-

Movement	EBL	EBT	EBR	WBL	WBT	WBR	NBL	NBT	NBR	SBL	SBT	SBR
Lane Configurations												
Traffic Volume (veh/h)	60	315	160	85	335	85	105	45	65	60	40	55
Future Volume (veh/h)	60	315	160	85	335	85	105	45	65	60	40	55
Initial Q (Qb), veh	0	0	0	0	0	0	0	0	0	0	0	0
Ped-Bike Adj(A_pbT)	1.00		1.00	1.00		0.98	1.00		0.98	1.00		1.00
Parking Bus, Adj	1.00	1.00	1.00	1.00	1.00	1.00	1.00	1.00	1.00	1.00	1.00	1.00
Work Zone On Approach		No			No			No			No	
Adj Sat Flow, veh/h/ln	1870	1728	1728	1870	1764	1870	1736	1736	1736	1885	1736	1736
Adj Flow Rate, veh/h	73	384	195	104	409	104	128	55	79	73	49	67
Peak Hour Factor	0.82	0.82	0.82	0.82	0.82	0.82	0.82	0.82	0.82	0.82	0.82	0.82
Percent Heavy Veh, %	2	2	2	2	2	2	1	1	1	1	1	1
Cap, veh/h	343	459	233	210	750	660	339	147	171	642	282	386
Arrive On Green	0.43	0.43	0.43	0.43	0.43	0.43	0.43	0.43	0.43	0.43	0.43	0.43
Sat Flow, veh/h	887	1080	549	835	1764	1552	587	346	403	1266	664	908
Grp Volume(v), veh/h	73	0	579	104	409	104	262	0	0	73	0	116
Grp Sat Flow(s),veh/h/ln	887	0	1629	835	1764	1552	1336	0	0	1266	0	1573
Q Serve(g_s), s	4.0	0.0	19.0	6.5	10.4	2.5	5.8	0.0	0.0	0.0	0.0	2.7
Cycle Q Clear(g_c), s	14.4	0.0	19.0	25.5	10.4	2.5	8.6	0.0	0.0	2.3	0.0	2.7
Prop In Lane	1.00		0.34	1.00		1.00	0.49		0.30	1.00		0.58
Lane Grp Cap(c), veh/h	343	0	692	210	750	660	657	0	0	642	0	668
V/C Ratio(X)	0.21	0.00	0.84	0.50	0.55	0.16	0.40	0.00	0.00	0.11	0.00	0.17
Avail Cap(c_a), veh/h	343	0	692	210	750	660	657	0	0	642	0	668
HCM Platoon Ratio	1.00	1.00	1.00	1.00	1.00	1.00	1.00	1.00	1.00	1.00	1.00	1.00
Upstream Filter(I)	1.00	0.00	1.00	1.00	1.00	1.00	1.00	0.00	0.00	1.00	0.00	1.00
Uniform Delay (d), s/veh	18.3	0.0	15.4	27.2	12.9	10.6	12.4	0.0	0.0	10.6	0.0	10.7
Incr Delay (d2), s/veh	0.3	0.0	8.8	1.8	0.8	0.1	1.8	0.0	0.0	0.4	0.0	0.6
Initial Q Delay(d3),s/veh	0.0	0.0	0.0	0.0	0.0	0.0	0.0	0.0	0.0	0.0	0.0	0.0
%ile BackOfQ(95%),veh/ln	1.4	0.0	12.2	2.7	6.5	1.3	4.7	0.0	0.0	1.1	0.0	1.7
Unsig. Movement Delay, s/veh												
LnGrp Delay(d),s/veh	18.6	0.0	24.2	29.0	13.7	10.7	14.2	0.0	0.0	10.9	0.0	11.3
LnGrp LOS	B	A	C	C	B	B	B	A	A	B	A	B
Approach Vol, veh/h		652			617			262			189	
Approach Delay, s/veh		23.6			15.8			14.2			11.1	
Approach LOS		C			B			B			B	

Timer - Assigned Phs	2	4	6	8
Phs Duration (G+Y+Rc), s	30.0	30.0	30.0	30.0
Change Period (Y+Rc), s	4.5	4.5	4.5	4.5
Max Green Setting (Gmax), s	25.5	25.5	25.5	25.5
Max Q Clear Time (g_c+I1), s	10.6	21.0	4.7	27.5
Green Ext Time (p_c), s	1.4	1.8	0.9	0.0

Intersection Summary	
HCM 6th Ctrl Delay	18.0
HCM 6th LOS	B

HCM 6th Signalized Intersection Summary
1: Jackson Dr & WIS-60

05/19/2020

Movement	EBL	EBT	EBR	WBL	WBT	WBR	NBL	NBT	NBR	SBL	SBT	SBR
Lane Configurations												
Traffic Volume (veh/h)	65	525	85	60	510	80	95	45	60	75	35	80
Future Volume (veh/h)	65	525	85	60	510	80	95	45	60	75	35	80
Initial Q (Qb), veh	0	0	0	0	0	0	0	0	0	0	0	0
Ped-Bike Adj(A_pbT)	1.00		1.00	1.00		1.00	1.00		1.00	1.00		1.00
Parking Bus, Adj	1.00	1.00	1.00	1.00	1.00	1.00	1.00	1.00	1.00	1.00	1.00	1.00
Work Zone On Approach		No			No			No			No	
Adj Sat Flow, veh/h/ln	1870	1659	1659	1870	1870	1870	1885	1672	1672	1870	1659	1659
Adj Flow Rate, veh/h	66	536	87	61	520	82	97	46	61	77	36	82
Peak Hour Factor	0.98	0.98	0.98	0.98	0.98	0.98	0.98	0.98	0.98	0.98	0.98	0.98
Percent Heavy Veh, %	2	2	2	2	2	2	1	1	1	2	2	2
Cap, veh/h	494	901	146	105	649	98	244	117	155	256	81	184
Arrive On Green	0.08	0.65	0.65	0.47	0.47	0.47	0.18	0.18	0.18	0.18	0.18	0.18
Sat Flow, veh/h	1781	1392	226	101	1386	210	1284	652	864	1287	450	1025
Grp Volume(v), veh/h	66	0	623	663	0	0	97	0	107	77	0	118
Grp Sat Flow(s),veh/h/ln	1781	0	1617	1697	0	0	1284	0	1516	1287	0	1474
Q Serve(g_s), s	1.1	0.0	15.1	12.2	0.0	0.0	5.0	0.0	4.2	3.8	0.0	4.9
Cycle Q Clear(g_c), s	1.1	0.0	15.1	22.7	0.0	0.0	9.8	0.0	4.2	8.1	0.0	4.9
Prop In Lane	1.00		0.14	0.09		0.12	1.00		0.57	1.00		0.69
Lane Grp Cap(c), veh/h	494	0	1047	852	0	0	244	0	272	256	0	265
V/C Ratio(X)	0.13	0.00	0.60	0.78	0.00	0.00	0.40	0.00	0.39	0.30	0.00	0.45
Avail Cap(c_a), veh/h	999	0	1816	1166	0	0	674	0	779	686	0	757
HCM Platoon Ratio	1.00	1.00	1.00	1.00	1.00	1.00	1.00	1.00	1.00	1.00	1.00	1.00
Upstream Filter(I)	1.00	0.00	1.00	1.00	0.00	0.00	1.00	0.00	1.00	1.00	0.00	1.00
Uniform Delay (d), s/veh	6.2	0.0	6.9	15.4	0.0	0.0	29.3	0.0	24.7	28.2	0.0	24.9
Incr Delay (d2), s/veh	0.0	0.0	0.8	3.0	0.0	0.0	0.4	0.0	0.3	0.2	0.0	0.4
Initial Q Delay(d3),s/veh	0.0	0.0	0.0	0.0	0.0	0.0	0.0	0.0	0.0	0.0	0.0	0.0
%ile BackOfQ(95%),veh/ln	0.7	0.0	7.7	13.4	0.0	0.0	2.7	0.0	2.7	2.1	0.0	3.0
Unsig. Movement Delay, s/veh												
LnGrp Delay(d),s/veh	6.2	0.0	7.7	18.3	0.0	0.0	29.7	0.0	25.0	28.5	0.0	25.4
LnGrp LOS	A	A	A	B	A	A	C	A	C	C	A	C
Approach Vol, veh/h		689			663			204			195	
Approach Delay, s/veh		7.6			18.3			27.2			26.6	
Approach LOS		A			B			C			C	

Timer - Assigned Phs	1	2		4		6		8				
Phs Duration (G+Y+Rc), s	12.2	37.2		18.7		49.4		18.7				
Change Period (Y+Rc), s	6.5	* 5.3		6.5		* 5.3		6.5				
Max Green Setting (Gmax), s	25.0	* 45		35.0		* 77		35.0				
Max Q Clear Time (g_c+I1), s	3.1	24.7		11.8		17.1		10.1				
Green Ext Time (p_c), s	0.0	7.2		0.4		8.5		0.4				

Intersection Summary												
HCM 6th Ctrl Delay			16.1									
HCM 6th LOS			B									

Notes

* HCM 6th computational engine requires equal clearance times for the phases crossing the barrier.

Intersection	
Int Delay, s/veh	1.4

Movement	EBL	EBT	WBT	WBR	SBL	SBR
Lane Configurations						
Traffic Vol, veh/h	40	620	610	20	20	40
Future Vol, veh/h	40	620	610	20	20	40
Conflicting Peds, #/hr	0	0	0	0	0	0
Sign Control	Free	Free	Free	Free	Stop	Stop
RT Channelized	-	None	-	None	-	None
Storage Length	-	-	-	-	0	-
Veh in Median Storage, #	-	0	0	-	0	-
Grade, %	-	0	0	-	0	-
Peak Hour Factor	92	92	92	92	92	92
Heavy Vehicles, %	3	3	2	2	2	2
Mvmt Flow	43	674	663	22	22	43

Major/Minor	Major1		Major2		Minor2	
Conflicting Flow All	685	0	-	0	1434	674
Stage 1	-	-	-	-	674	-
Stage 2	-	-	-	-	760	-
Critical Hdwy	4.13	-	-	-	6.42	6.22
Critical Hdwy Stg 1	-	-	-	-	5.42	-
Critical Hdwy Stg 2	-	-	-	-	5.42	-
Follow-up Hdwy	2.227	-	-	-	3.518	3.318
Pot Cap-1 Maneuver	904	-	-	-	147	455
Stage 1	-	-	-	-	506	-
Stage 2	-	-	-	-	462	-
Platoon blocked, %		-	-	-		
Mov Cap-1 Maneuver	904	-	-	-	136	455
Mov Cap-2 Maneuver	-	-	-	-	136	-
Stage 1	-	-	-	-	468	-
Stage 2	-	-	-	-	462	-

Approach	EB	WB	SB
HCM Control Delay, s	0.6	0	23.9
HCM LOS			C

Minor Lane/Major Mvmt	EBL	EBT	WBT	WBR	SBLn1
Capacity (veh/h)	904	-	-	-	255
HCM Lane V/C Ratio	0.048	-	-	-	0.256
HCM Control Delay (s)	9.2	0	-	-	23.9
HCM Lane LOS	A	A	-	-	C
HCM 95th %tile Q(veh)	0.2	-	-	-	1

Movement	EBL	EBT	EBR	WBL	WBT	WBR	NBL	NBT	NBR	SBL	SBT	SBR
Lane Configurations												
Traffic Volume (veh/h)	20	395	225	55	410	20	185	0	45	20	0	35
Future Volume (veh/h)	20	395	225	55	410	20	185	0	45	20	0	35
Initial Q (Qb), veh	0	0	0	0	0	0	0	0	0	0	0	0
Ped-Bike Adj(A_pbT)	1.00		1.00	1.00		1.00	1.00		1.00	1.00		1.00
Parking Bus, Adj	1.00	1.00	1.00	1.00	1.00	1.00	1.00	1.00	1.00	1.00	1.00	1.00
Work Zone On Approach		No			No			No			No	
Adj Sat Flow, veh/h/ln	1856	1714	1714	1856	1714	1714	1723	1723	1870	1723	1723	1723
Adj Flow Rate, veh/h	21	420	239	59	436	21	197	0	48	21	0	37
Peak Hour Factor	0.94	0.94	0.94	0.94	0.94	0.94	0.94	0.94	0.94	0.94	0.94	0.94
Percent Heavy Veh, %	3	3	3	3	3	3	2	2	2	2	2	2
Cap, veh/h	557	550	313	383	870	42	501	0	303	189	45	150
Arrive On Green	0.54	0.54	0.54	0.54	0.54	0.54	0.19	0.00	0.19	0.19	0.00	0.19
Sat Flow, veh/h	927	1025	583	769	1622	78	1484	0	1585	210	235	784
Grp Volume(v), veh/h	21	0	659	59	0	457	197	0	48	58	0	0
Grp Sat Flow(s),veh/h/ln	927	0	1608	769	0	1700	1484	0	1585	1229	0	0
Q Serve(g_s), s	0.5	0.0	10.6	2.2	0.0	5.6	0.0	0.0	0.8	0.0	0.0	0.0
Cycle Q Clear(g_c), s	6.1	0.0	10.6	12.8	0.0	5.6	3.6	0.0	0.8	3.7	0.0	0.0
Prop In Lane	1.00		0.36	1.00		0.05	1.00		1.00	0.36		0.64
Lane Grp Cap(c), veh/h	557	0	863	383	0	912	501	0	303	383	0	0
V/C Ratio(X)	0.04	0.00	0.76	0.15	0.00	0.50	0.39	0.00	0.16	0.15	0.00	0.00
Avail Cap(c_a), veh/h	944	0	1534	704	0	1621	1006	0	936	933	0	0
HCM Platoon Ratio	1.00	1.00	1.00	1.00	1.00	1.00	1.00	1.00	1.00	1.00	1.00	1.00
Upstream Filter(I)	1.00	0.00	1.00	1.00	0.00	1.00	1.00	0.00	1.00	1.00	0.00	0.00
Uniform Delay (d), s/veh	6.8	0.0	6.0	11.0	0.0	4.9	12.3	0.0	11.1	11.2	0.0	0.0
Incr Delay (d2), s/veh	0.0	0.0	1.4	0.2	0.0	0.4	0.5	0.0	0.2	0.2	0.0	0.0
Initial Q Delay(d3),s/veh	0.0	0.0	0.0	0.0	0.0	0.0	0.0	0.0	0.0	0.0	0.0	0.0
%ile BackOfQ(95%),veh/ln	0.1	0.0	3.0	0.5	0.0	1.5	2.0	0.0	0.5	0.5	0.0	0.0
Unsig. Movement Delay, s/veh												
LnGrp Delay(d),s/veh	6.8	0.0	7.4	11.2	0.0	5.3	12.8	0.0	11.4	11.4	0.0	0.0
LnGrp LOS	A	A	A	B	A	A	B	A	B	B	A	A
Approach Vol, veh/h		680			516			245			58	
Approach Delay, s/veh		7.4			6.0			12.5			11.4	
Approach LOS		A			A			B			B	

Timer - Assigned Phs		2		4		6		8				
Phs Duration (G+Y+Rc), s		10.8		22.2		10.8		22.2				
Change Period (Y+Rc), s		4.5		4.5		4.5		4.5				
Max Green Setting (Gmax), s		19.5		31.5		19.5		31.5				
Max Q Clear Time (g_c+I1), s		5.6		12.6		5.7		14.8				
Green Ext Time (p_c), s		1.1		4.6		0.2		2.9				

Intersection Summary												
HCM 6th Ctrl Delay			7.9									
HCM 6th LOS			A									

Intersection	
Int Delay, s/veh	0

Movement	EBL	EBT	WBT	WBR	SBL	SBR
Lane Configurations		↑	↑		⋔	
Traffic Vol, veh/h	5	455	485	0	0	0
Future Vol, veh/h	5	455	485	0	0	0
Conflicting Peds, #/hr	0	0	0	0	0	0
Sign Control	Free	Free	Free	Free	Stop	Stop
RT Channelized	-	None	-	None	-	None
Storage Length	-	-	-	-	0	-
Veh in Median Storage, #	-	0	0	-	0	-
Grade, %	-	0	0	-	0	-
Peak Hour Factor	92	92	92	92	92	92
Heavy Vehicles, %	2	2	3	3	2	2
Mvmt Flow	5	495	527	0	0	0

Major/Minor	Major1		Major2		Minor2	
Conflicting Flow All	527	0	-	0	1032	527
Stage 1	-	-	-	-	527	-
Stage 2	-	-	-	-	505	-
Critical Hdwy	4.12	-	-	-	6.42	6.22
Critical Hdwy Stg 1	-	-	-	-	5.42	-
Critical Hdwy Stg 2	-	-	-	-	5.42	-
Follow-up Hdwy	2.218	-	-	-	3.518	3.318
Pot Cap-1 Maneuver	1040	-	-	0	258	551
Stage 1	-	-	-	0	592	-
Stage 2	-	-	-	0	606	-
Platoon blocked, %		-	-			
Mov Cap-1 Maneuver	1040	-	-	-	256	551
Mov Cap-2 Maneuver	-	-	-	-	256	-
Stage 1	-	-	-	-	588	-
Stage 2	-	-	-	-	606	-

Approach	EB	WB	SB
HCM Control Delay, s	0.1	0	0
HCM LOS			A

Minor Lane/Major Mvmt	EBL	EBT	WBT	SBLn1
Capacity (veh/h)	1040	-	-	-
HCM Lane V/C Ratio	0.005	-	-	-
HCM Control Delay (s)	8.5	-	-	0
HCM Lane LOS	A	-	-	A
HCM 95th %tile Q(veh)	0	-	-	-

Intersection	
Int Delay, s/veh	0

Movement	EBT	EBR	WBL	WBT	NBL	NBR
Lane Configurations	↑			↑	⋔	
Traffic Vol, veh/h	455	0	0	485	0	0
Future Vol, veh/h	455	0	0	485	0	0
Conflicting Peds, #/hr	0	0	0	0	0	0
Sign Control	Free	Free	Free	Free	Stop	Stop
RT Channelized	-	None	-	None	-	None
Storage Length	-	-	-	-	0	-
Veh in Median Storage, #	0	-	-	0	0	-
Grade, %	0	-	-	0	0	-
Peak Hour Factor	92	92	92	92	92	92
Heavy Vehicles, %	2	2	3	3	2	2
Mvmt Flow	495	0	0	527	0	0

Major/Minor	Major1		Major2		Minor1	
Conflicting Flow All	0	-	-	-	1022	495
Stage 1	-	-	-	-	495	-
Stage 2	-	-	-	-	527	-
Critical Hdwy	-	-	-	-	6.42	6.22
Critical Hdwy Stg 1	-	-	-	-	5.42	-
Critical Hdwy Stg 2	-	-	-	-	5.42	-
Follow-up Hdwy	-	-	-	-	3.518	3.318
Pot Cap-1 Maneuver	-	0	0	-	261	575
Stage 1	-	0	0	-	613	-
Stage 2	-	0	0	-	592	-
Platoon blocked, %	-			-		
Mov Cap-1 Maneuver	-	-	-	-	261	575
Mov Cap-2 Maneuver	-	-	-	-	261	-
Stage 1	-	-	-	-	613	-
Stage 2	-	-	-	-	592	-

Approach	EB	WB	NB
HCM Control Delay, s	0	0	0
HCM LOS			A

Minor Lane/Major Mvmt	NBLn1	EBT	WBT
Capacity (veh/h)	-	-	-
HCM Lane V/C Ratio	-	-	-
HCM Control Delay (s)	0	-	-
HCM Lane LOS	A	-	-
HCM 95th %tile Q(veh)	-	-	-

Movement	EBL	EBT	EBR	WBL	WBT	WBR	NBL	NBT	NBR	SBL	SBT	SBR
Lane Configurations												
Traffic Volume (veh/h)	55	265	135	75	295	40	110	35	60	60	35	80
Future Volume (veh/h)	55	265	135	75	295	40	110	35	60	60	35	80
Initial Q (Qb), veh	0	0	0	0	0	0	0	0	0	0	0	0
Ped-Bike Adj(A_pbT)	1.00		1.00	1.00		1.00	1.00		1.00	1.00		1.00
Parking Bus, Adj	1.00	1.00	1.00	1.00	1.00	1.00	1.00	1.00	1.00	1.00	1.00	1.00
Work Zone On Approach		No			No			No			No	
Adj Sat Flow, veh/h/ln	1870	1728	1728	1856	1750	1856	1723	1723	1723	1885	1736	1736
Adj Flow Rate, veh/h	60	288	147	82	321	43	120	38	65	65	38	87
Peak Hour Factor	0.92	0.92	0.92	0.92	0.92	0.92	0.92	0.92	0.92	0.92	0.92	0.92
Percent Heavy Veh, %	2	2	2	3	3	3	2	2	2	1	1	1
Cap, veh/h	549	459	234	452	744	669	332	97	98	641	124	284
Arrive On Green	0.43	0.43	0.43	0.43	0.43	0.43	0.26	0.26	0.26	0.26	0.26	0.26
Sat Flow, veh/h	1018	1078	550	946	1750	1572	535	367	371	1302	469	1074
Grp Volume(v), veh/h	60	0	435	82	321	43	223	0	0	65	0	125
Grp Sat Flow(s),veh/h/ln	1018	0	1629	946	1750	1572	1273	0	0	1302	0	1543
Q Serve(g_s), s	1.3	0.0	6.1	2.2	3.8	0.5	2.8	0.0	0.0	0.0	0.0	1.9
Cycle Q Clear(g_c), s	5.0	0.0	6.1	8.2	3.8	0.5	4.7	0.0	0.0	0.9	0.0	1.9
Prop In Lane	1.00		0.34	1.00		1.00	0.54		0.29	1.00		0.70
Lane Grp Cap(c), veh/h	549	0	693	452	744	669	528	0	0	641	0	409
V/C Ratio(X)	0.11	0.00	0.63	0.18	0.43	0.06	0.42	0.00	0.00	0.10	0.00	0.31
Avail Cap(c_a), veh/h	1010	0	1429	880	1536	1380	1334	0	0	1439	0	1354
HCM Platoon Ratio	1.00	1.00	1.00	1.00	1.00	1.00	1.00	1.00	1.00	1.00	1.00	1.00
Upstream Filter(I)	1.00	0.00	1.00	1.00	1.00	1.00	1.00	0.00	0.00	1.00	0.00	1.00
Uniform Delay (d), s/veh	7.6	0.0	6.5	9.8	5.9	4.9	9.5	0.0	0.0	8.2	0.0	8.5
Incr Delay (d2), s/veh	0.1	0.0	0.9	0.2	0.4	0.0	0.5	0.0	0.0	0.1	0.0	0.4
Initial Q Delay(d3),s/veh	0.0	0.0	0.0	0.0	0.0	0.0	0.0	0.0	0.0	0.0	0.0	0.0
%ile BackOfQ(95%),veh/ln	0.3	0.0	2.2	0.6	1.2	0.1	1.8	0.0	0.0	0.4	0.0	0.9
Unsig. Movement Delay, s/veh												
LnGrp Delay(d),s/veh	7.7	0.0	7.5	10.0	6.3	5.0	10.1	0.0	0.0	8.3	0.0	9.0
LnGrp LOS	A	A	A	A	A	A	B	A	A	A	A	A
Approach Vol, veh/h		495			446			223			190	
Approach Delay, s/veh		7.5			6.8			10.1			8.7	
Approach LOS		A			A			B			A	

Timer - Assigned Phs	2	4	6	8
Phs Duration (G+Y+Rc), s	12.2	16.9	12.2	16.9
Change Period (Y+Rc), s	4.5	4.5	4.5	4.5
Max Green Setting (Gmax), s	25.5	25.5	25.5	25.5
Max Q Clear Time (g_c+I1), s	6.7	8.1	3.9	10.2
Green Ext Time (p_c), s	1.3	2.9	0.9	2.1

Intersection Summary	
HCM 6th Ctrl Delay	7.9
HCM 6th LOS	A

HCM 6th Signalized Intersection Summary
1: Jackson Dr & WIS-60

05/17/2020

Movement	EBL	EBT	EBR	WBL	WBT	WBR	NBL	NBT	NBR	SBL	SBT	SBR
Lane Configurations												
Traffic Volume (veh/h)	70	480	30	40	455	45	115	55	60	85	25	185
Future Volume (veh/h)	70	480	30	40	455	45	115	55	60	85	25	185
Initial Q (Qb), veh	0	0	0	0	0	0	0	0	0	0	0	0
Ped-Bike Adj(A_pbT)	1.00		1.00	1.00		1.00	1.00		0.97	1.00		0.99
Parking Bus, Adj	1.00	1.00	1.00	1.00	1.00	1.00	1.00	1.00	1.00	1.00	1.00	1.00
Work Zone On Approach		No			No			No			No	
Adj Sat Flow, veh/h/ln	1752	1554	1554	1767	1767	1767	1826	1619	1619	1856	1646	1646
Adj Flow Rate, veh/h	73	500	31	42	474	47	120	57	62	89	26	193
Peak Hour Factor	0.96	0.96	0.96	0.96	0.96	0.96	0.96	0.96	0.96	0.96	0.96	0.96
Percent Heavy Veh, %	10	10	10	9	9	9	5	5	5	3	3	3
Cap, veh/h	420	828	51	81	584	56	252	190	207	356	46	340
Arrive On Green	0.08	0.57	0.57	0.40	0.40	0.40	0.27	0.27	0.27	0.27	0.27	0.27
Sat Flow, veh/h	1668	1447	90	74	1445	138	1131	698	759	1258	168	1245
Grp Volume(v), veh/h	73	0	531	563	0	0	120	0	119	89	0	219
Grp Sat Flow(s),veh/h/ln	1668	0	1537	1657	0	0	1131	0	1457	1258	0	1413
Q Serve(g_s), s	1.7	0.0	17.2	11.1	0.0	0.0	7.8	0.0	4.9	4.6	0.0	10.1
Cycle Q Clear(g_c), s	1.7	0.0	17.2	23.0	0.0	0.0	17.9	0.0	4.9	9.5	0.0	10.1
Prop In Lane	1.00		0.06	0.07		0.08	1.00		0.52	1.00		0.88
Lane Grp Cap(c), veh/h	420	0	879	720	0	0	252	0	397	356	0	385
V/C Ratio(X)	0.17	0.00	0.60	0.78	0.00	0.00	0.48	0.00	0.30	0.25	0.00	0.57
Avail Cap(c_a), veh/h	830	0	1546	1021	0	0	464	0	670	592	0	650
HCM Platoon Ratio	1.00	1.00	1.00	1.00	1.00	1.00	1.00	1.00	1.00	1.00	1.00	1.00
Upstream Filter(I)	1.00	0.00	1.00	1.00	0.00	0.00	1.00	0.00	1.00	1.00	0.00	1.00
Uniform Delay (d), s/veh	9.4	0.0	10.6	20.1	0.0	0.0	31.5	0.0	21.9	25.7	0.0	23.8
Incr Delay (d2), s/veh	0.1	0.0	1.0	3.4	0.0	0.0	0.5	0.0	0.2	0.1	0.0	0.5
Initial Q Delay(d3),s/veh	0.0	0.0	0.0	0.0	0.0	0.0	0.0	0.0	0.0	0.0	0.0	0.0
%ile BackOfQ(95%),veh/ln	1.1	0.0	9.2	14.0	0.0	0.0	3.8	0.0	3.0	2.4	0.0	6.0
Unsig. Movement Delay, s/veh												
LnGrp Delay(d),s/veh	9.5	0.0	11.6	23.5	0.0	0.0	32.0	0.0	22.1	25.8	0.0	24.3
LnGrp LOS	A	A	B	C	A	A	C	A	C	C	A	C
Approach Vol, veh/h		604			563			239			308	
Approach Delay, s/veh		11.4			23.5			27.1			24.7	
Approach LOS		B			C			C			C	

Timer - Assigned Phs	1	2		4		6		8
Phs Duration (G+Y+Rc), s	12.8	36.0		27.2		48.8		27.2
Change Period (Y+Rc), s	6.5	* 5.3		6.5		* 5.3		6.5
Max Green Setting (Gmax), s	25.0	* 45		35.0		* 77		35.0
Max Q Clear Time (g_c+I1), s	3.7	25.0		19.9		19.2		12.1
Green Ext Time (p_c), s	0.0	5.8		0.5		6.7		0.8

Intersection Summary	
HCM 6th Ctrl Delay	19.9
HCM 6th LOS	B

Notes

* HCM 6th computational engine requires equal clearance times for the phases crossing the barrier.

Intersection	
Int Delay, s/veh	2.8

Movement	EBL	EBT	WBT	WBR	SBL	SBR
Lane Configurations						
Traffic Vol, veh/h	80	545	475	35	40	65
Future Vol, veh/h	80	545	475	35	40	65
Conflicting Peds, #/hr	0	0	0	0	0	0
Sign Control	Free	Free	Free	Free	Stop	Stop
RT Channelized	-	None	-	None	-	None
Storage Length	-	-	-	-	0	-
Veh in Median Storage, #	-	0	0	-	0	-
Grade, %	-	0	0	-	0	-
Peak Hour Factor	92	92	92	92	92	92
Heavy Vehicles, %	4	4	9	9	2	2
Mvmt Flow	87	592	516	38	43	71

Major/Minor	Major1		Major2		Minor2	
Conflicting Flow All	554	0	-	0	1301	535
Stage 1	-	-	-	-	535	-
Stage 2	-	-	-	-	766	-
Critical Hdwy	4.14	-	-	-	6.42	6.22
Critical Hdwy Stg 1	-	-	-	-	5.42	-
Critical Hdwy Stg 2	-	-	-	-	5.42	-
Follow-up Hdwy	2.236	-	-	-	3.518	3.318
Pot Cap-1 Maneuver	1006	-	-	-	178	545
Stage 1	-	-	-	-	587	-
Stage 2	-	-	-	-	459	-
Platoon blocked, %		-	-	-		
Mov Cap-1 Maneuver	1006	-	-	-	155	545
Mov Cap-2 Maneuver	-	-	-	-	155	-
Stage 1	-	-	-	-	511	-
Stage 2	-	-	-	-	459	-

Approach	EB	WB	SB
HCM Control Delay, s	1.1	0	26.7
HCM LOS			D

Minor Lane/Major Mvmt	EBL	EBT	WBT	WBR	SBLn1
Capacity (veh/h)	1006	-	-	-	278
HCM Lane V/C Ratio	0.086	-	-	-	0.411
HCM Control Delay (s)	8.9	0	-	-	26.7
HCM Lane LOS	A	A	-	-	D
HCM 95th %tile Q(veh)	0.3	-	-	-	1.9

Movement	EBL	EBT	EBR	WBL	WBT	WBR	NBL	NBT	NBR	SBL	SBT	SBR
Lane Configurations												
Traffic Volume (veh/h)	10	435	140	40	340	15	110	0	30	75	0	60
Future Volume (veh/h)	10	435	140	40	340	15	110	0	30	75	0	60
Initial Q (Qb), veh	0	0	0	0	0	0	0	0	0	0	0	0
Ped-Bike Adj(A_pbT)	1.00		0.98	1.00		1.00	1.00		1.00	1.00		1.00
Parking Bus, Adj	1.00	1.00	1.00	1.00	1.00	1.00	1.00	1.00	1.00	1.00	1.00	1.00
Work Zone On Approach		No			No			No			No	
Adj Sat Flow, veh/h/ln	1841	1700	1700	1811	1673	1673	1723	1792	1870	1736	1736	1736
Adj Flow Rate, veh/h	12	518	167	48	405	18	131	0	36	89	0	71
Peak Hour Factor	0.84	0.84	0.84	0.84	0.84	0.84	0.84	0.84	0.84	0.84	0.84	0.84
Percent Heavy Veh, %	4	4	4	6	6	6	2	2	2	1	1	1
Cap, veh/h	564	666	215	350	865	38	488	0	334	252	35	107
Arrive On Green	0.54	0.54	0.54	0.54	0.54	0.54	0.21	0.00	0.21	0.21	0.00	0.21
Sat Flow, veh/h	949	1225	395	733	1590	71	1386	0	1585	471	167	509
Grp Volume(v), veh/h	12	0	685	48	0	423	131	0	36	160	0	0
Grp Sat Flow(s),veh/h/ln	949	0	1619	733	0	1660	1386	0	1585	1147	0	0
Q Serve(g_s), s	0.3	0.0	12.3	2.0	0.0	5.7	0.0	0.0	0.7	2.3	0.0	0.0
Cycle Q Clear(g_c), s	6.0	0.0	12.3	14.3	0.0	5.7	2.9	0.0	0.7	5.2	0.0	0.0
Prop In Lane	1.00		0.24	1.00		0.04	1.00		1.00	0.56		0.44
Lane Grp Cap(c), veh/h	564	0	881	350	0	903	488	0	334	395	0	0
V/C Ratio(X)	0.02	0.00	0.78	0.14	0.00	0.47	0.27	0.00	0.11	0.41	0.00	0.00
Avail Cap(c_a), veh/h	1483	0	2449	1059	0	2511	1105	0	1102	1050	0	0
HCM Platoon Ratio	1.00	1.00	1.00	1.00	1.00	1.00	1.00	1.00	1.00	1.00	1.00	1.00
Upstream Filter(I)	1.00	0.00	1.00	1.00	0.00	1.00	1.00	0.00	1.00	1.00	0.00	0.00
Uniform Delay (d), s/veh	7.0	0.0	6.6	12.3	0.0	5.1	12.6	0.0	11.7	13.5	0.0	0.0
Incr Delay (d2), s/veh	0.0	0.0	1.5	0.2	0.0	0.4	0.3	0.0	0.1	0.7	0.0	0.0
Initial Q Delay(d3),s/veh	0.0	0.0	0.0	0.0	0.0	0.0	0.0	0.0	0.0	0.0	0.0	0.0
%ile BackOfQ(95%),veh/ln	0.1	0.0	4.0	0.5	0.0	1.8	1.4	0.0	0.4	1.9	0.0	0.0
Unsig. Movement Delay, s/veh												
LnGrp Delay(d),s/veh	7.0	0.0	8.1	12.4	0.0	5.5	12.9	0.0	11.8	14.2	0.0	0.0
LnGrp LOS	A	A	A	B	A	A	B	A	B	B	A	A
Approach Vol, veh/h		697			471			167			160	
Approach Delay, s/veh		8.1			6.2			12.6			14.2	
Approach LOS		A			A			B			B	

Timer - Assigned Phs		2		4		6		8				
Phs Duration (G+Y+Rc), s		12.2		24.5		12.2		24.5				
Change Period (Y+Rc), s		4.5		4.5		4.5		4.5				
Max Green Setting (Gmax), s		25.5		55.5		25.5		55.5				
Max Q Clear Time (g_c+I1), s		4.9		14.3		7.2		16.3				
Green Ext Time (p_c), s		0.8		5.7		0.8		3.2				

Intersection Summary	
HCM 6th Ctrl Delay	8.7
HCM 6th LOS	A

Intersection	
Int Delay, s/veh	0.3

Movement	EBL	EBT	WBT	WBR	SBL	SBR
Lane Configurations		↑	↑		↱	
Traffic Vol, veh/h	25	515	385	5	0	10
Future Vol, veh/h	25	515	385	5	0	10
Conflicting Peds, #/hr	0	0	0	0	0	0
Sign Control	Free	Free	Free	Free	Stop	Stop
RT Channelized	-	None	-	None	-	None
Storage Length	-	-	-	-	0	-
Veh in Median Storage, #	-	0	0	-	0	-
Grade, %	-	0	0	-	0	-
Peak Hour Factor	92	92	92	92	92	92
Heavy Vehicles, %	6	6	6	6	2	2
Mvmt Flow	27	560	418	5	0	11

Major/Minor	Major1		Major2		Minor2	
Conflicting Flow All	423	0	-	0	1035	421
Stage 1	-	-	-	-	421	-
Stage 2	-	-	-	-	614	-
Critical Hdwy	4.16	-	-	-	6.42	6.22
Critical Hdwy Stg 1	-	-	-	-	5.42	-
Critical Hdwy Stg 2	-	-	-	-	5.42	-
Follow-up Hdwy	2.254	-	-	-	3.518	3.318
Pot Cap-1 Maneuver	1115	-	-	-	257	632
Stage 1	-	-	-	-	662	-
Stage 2	-	-	-	-	540	-
Platoon blocked, %		-	-	-		
Mov Cap-1 Maneuver	1115	-	-	-	248	632
Mov Cap-2 Maneuver	-	-	-	-	248	-
Stage 1	-	-	-	-	639	-
Stage 2	-	-	-	-	540	-

Approach	EB	WB	SB
HCM Control Delay, s	0.4	0	10.8
HCM LOS			B

Minor Lane/Major Mvmt	EBL	EBT	WBT	WBR	SBLn1
Capacity (veh/h)	1115	-	-	-	632
HCM Lane V/C Ratio	0.024	-	-	-	0.017
HCM Control Delay (s)	8.3	-	-	-	10.8
HCM Lane LOS	A	-	-	-	B
HCM 95th %tile Q(veh)	0.1	-	-	-	0.1

Intersection	
Int Delay, s/veh	0.3

Movement	EBT	EBR	WBL	WBT	NBL	NBR
Lane Configurations	↑			↑	⋔	
Traffic Vol, veh/h	500	15	5	385	5	10
Future Vol, veh/h	500	15	5	385	5	10
Conflicting Peds, #/hr	0	0	0	0	0	0
Sign Control	Free	Free	Free	Free	Stop	Stop
RT Channelized	-	None	-	None	-	None
Storage Length	-	-	-	-	0	-
Veh in Median Storage, #	0	-	-	0	0	-
Grade, %	0	-	-	0	0	-
Peak Hour Factor	92	92	92	92	92	92
Heavy Vehicles, %	6	6	6	6	2	2
Mvmt Flow	543	16	5	418	5	11

Major/Minor	Major1		Major2		Minor1	
Conflicting Flow All	0	0	559	0	979	551
Stage 1	-	-	-	-	551	-
Stage 2	-	-	-	-	428	-
Critical Hdwy	-	-	4.16	-	6.42	6.22
Critical Hdwy Stg 1	-	-	-	-	5.42	-
Critical Hdwy Stg 2	-	-	-	-	5.42	-
Follow-up Hdwy	-	-	2.254	-	3.518	3.318
Pot Cap-1 Maneuver	-	-	992	-	277	534
Stage 1	-	-	-	-	577	-
Stage 2	-	-	-	-	657	-
Platoon blocked, %	-	-		-		
Mov Cap-1 Maneuver	-	-	992	-	275	534
Mov Cap-2 Maneuver	-	-	-	-	275	-
Stage 1	-	-	-	-	577	-
Stage 2	-	-	-	-	652	-

Approach	EB	WB	NB
HCM Control Delay, s	0	0.1	14.2
HCM LOS			B

Minor Lane/Major Mvmt	NBLn1	EBT	EBR	WBL	WBT
Capacity (veh/h)	406	-	-	992	-
HCM Lane V/C Ratio	0.04	-	-	0.005	-
HCM Control Delay (s)	14.2	-	-	8.6	-
HCM Lane LOS	B	-	-	A	-
HCM 95th %tile Q(veh)	0.1	-	-	0	-

Movement	EBL	EBT	EBR	WBL	WBT	WBR	NBL	NBT	NBR	SBL	SBT	SBR
Lane Configurations												
Traffic Volume (veh/h)	75	395	40	30	285	90	30	25	40	80	15	75
Future Volume (veh/h)	75	395	40	30	285	90	30	25	40	80	15	75
Initial Q (Qb), veh	0	0	0	0	0	0	0	0	0	0	0	0
Ped-Bike Adj(A_pbT)	1.00		1.00	1.00		1.00	1.00		1.00	1.00		1.00
Parking Bus, Adj	1.00	1.00	1.00	1.00	1.00	1.00	1.00	1.00	1.00	1.00	1.00	1.00
Work Zone On Approach		No			No			No			No	
Adj Sat Flow, veh/h/ln	1811	1673	1673	1841	1736	1841	1654	1654	1654	1811	1668	1668
Adj Flow Rate, veh/h	89	470	48	36	339	107	36	30	48	95	18	89
Peak Hour Factor	0.84	0.84	0.84	0.84	0.84	0.84	0.84	0.84	0.84	0.84	0.84	0.84
Percent Heavy Veh, %	6	6	6	4	4	4	7	7	7	6	6	6
Cap, veh/h	595	702	72	480	816	732	234	78	91	550	43	212
Arrive On Green	0.47	0.47	0.47	0.47	0.47	0.47	0.18	0.18	0.18	0.18	0.18	0.18
Sat Flow, veh/h	914	1493	152	869	1736	1558	268	444	518	1279	244	1207
Grp Volume(v), veh/h	89	0	518	36	339	107	114	0	0	95	0	107
Grp Sat Flow(s),veh/h/ln	914	0	1645	869	1736	1558	1230	0	0	1279	0	1451
Q Serve(g_s), s	1.8	0.0	6.2	0.8	3.3	1.0	0.7	0.0	0.0	0.0	0.0	1.7
Cycle Q Clear(g_c), s	5.1	0.0	6.2	7.0	3.3	1.0	2.4	0.0	0.0	1.2	0.0	1.7
Prop In Lane	1.00		0.09	1.00		1.00	0.32		0.42	1.00		0.83
Lane Grp Cap(c), veh/h	595	0	773	480	816	732	403	0	0	550	0	255
V/C Ratio(X)	0.15	0.00	0.67	0.07	0.42	0.15	0.28	0.00	0.00	0.17	0.00	0.42
Avail Cap(c_a), veh/h	1083	0	1652	944	1743	1564	1527	0	0	1609	0	1456
HCM Platoon Ratio	1.00	1.00	1.00	1.00	1.00	1.00	1.00	1.00	1.00	1.00	1.00	1.00
Upstream Filter(I)	1.00	0.00	1.00	1.00	1.00	1.00	1.00	0.00	0.00	1.00	0.00	1.00
Uniform Delay (d), s/veh	6.1	0.0	5.2	7.9	4.4	3.8	9.5	0.0	0.0	9.1	0.0	9.3
Incr Delay (d2), s/veh	0.1	0.0	1.0	0.1	0.3	0.1	0.4	0.0	0.0	0.1	0.0	1.1
Initial Q Delay(d3),s/veh	0.0	0.0	0.0	0.0	0.0	0.0	0.0	0.0	0.0	0.0	0.0	0.0
%ile BackOfQ(95%),veh/ln	0.3	0.0	1.6	0.2	0.6	0.2	0.8	0.0	0.0	0.6	0.0	0.8
Unsig. Movement Delay, s/veh												
LnGrp Delay(d),s/veh	6.2	0.0	6.2	8.0	4.8	3.9	9.9	0.0	0.0	9.3	0.0	10.4
LnGrp LOS	A	A	A	A	A	A	A	A	A	A	A	B
Approach Vol, veh/h		607			482			114			202	
Approach Delay, s/veh		6.2			4.8			9.9			9.9	
Approach LOS		A			A			A			A	

Timer - Assigned Phs	2	4	6	8
Phs Duration (G+Y+Rc), s	9.0	16.4	9.0	16.4
Change Period (Y+Rc), s	4.5	4.5	4.5	4.5
Max Green Setting (Gmax), s	25.5	25.5	25.5	25.5
Max Q Clear Time (g_c+I1), s	4.4	8.2	3.7	9.0
Green Ext Time (p_c), s	0.6	3.7	0.9	2.3

Intersection Summary	
HCM 6th Ctrl Delay	6.6
HCM 6th LOS	A

HCM 6th Signalized Intersection Summary
1: Jackson Dr & WIS-60

05/17/2020

Movement	EBL	EBT	EBR	WBL	WBT	WBR	NBL	NBT	NBR	SBL	SBT	SBR
Lane Configurations												
Traffic Volume (veh/h)	180	565	125	50	490	100	75	80	55	85	65	105
Future Volume (veh/h)	180	565	125	50	490	100	75	80	55	85	65	105
Initial Q (Qb), veh	0	0	0	0	0	0	0	0	0	0	0	0
Ped-Bike Adj(A_pbT)	1.00		0.98	1.00		0.98	0.99		0.99	0.99		0.97
Parking Bus, Adj	1.00	1.00	1.00	1.00	1.00	1.00	1.00	1.00	1.00	1.00	1.00	1.00
Work Zone On Approach		No			No			No			No	
Adj Sat Flow, veh/h/ln	1856	1646	1646	1841	1841	1841	1856	1646	1646	1885	1672	1672
Adj Flow Rate, veh/h	194	608	134	54	527	108	81	86	59	91	70	113
Peak Hour Factor	0.93	0.93	0.93	0.93	0.93	0.93	0.93	0.93	0.93	0.93	0.93	0.93
Percent Heavy Veh, %	3	3	3	4	4	4	3	3	3	1	1	1
Cap, veh/h	438	833	184	86	610	121	212	196	135	254	122	197
Arrive On Green	0.10	0.64	0.64	0.47	0.47	0.47	0.22	0.22	0.22	0.22	0.22	0.22
Sat Flow, veh/h	1767	1300	287	84	1308	259	1185	906	621	1245	564	910
Grp Volume(v), veh/h	194	0	742	689	0	0	81	0	145	91	0	183
Grp Sat Flow(s),veh/h/ln	1767	0	1587	1651	0	0	1185	0	1527	1245	0	1474
Q Serve(g_s), s	4.2	0.0	26.1	18.7	0.0	0.0	5.4	0.0	6.8	5.6	0.0	9.2
Cycle Q Clear(g_c), s	4.2	0.0	26.1	31.1	0.0	0.0	14.6	0.0	6.8	12.4	0.0	9.2
Prop In Lane	1.00		0.18	0.08		0.16	1.00		0.41	1.00		0.62
Lane Grp Cap(c), veh/h	438	0	1017	818	0	0	212	0	331	254	0	319
V/C Ratio(X)	0.44	0.00	0.73	0.84	0.00	0.00	0.38	0.00	0.44	0.36	0.00	0.57
Avail Cap(c_a), veh/h	803	0	1467	940	0	0	457	0	646	511	0	624
HCM Platoon Ratio	1.00	1.00	1.00	1.00	1.00	1.00	1.00	1.00	1.00	1.00	1.00	1.00
Upstream Filter(I)	1.00	0.00	1.00	1.00	0.00	0.00	1.00	0.00	1.00	1.00	0.00	1.00
Uniform Delay (d), s/veh	7.9	0.0	10.0	19.7	0.0	0.0	35.5	0.0	28.1	33.4	0.0	29.0
Incr Delay (d2), s/veh	0.3	0.0	1.5	6.8	0.0	0.0	0.4	0.0	0.3	0.3	0.0	0.6
Initial Q Delay(d3),s/veh	0.0	0.0	0.0	0.0	0.0	0.0	0.0	0.0	0.0	0.0	0.0	0.0
%ile BackOfQ(95%),veh/ln	2.7	0.0	13.0	18.6	0.0	0.0	2.8	0.0	4.5	3.1	0.0	5.9
Unsig. Movement Delay, s/veh												
LnGrp Delay(d),s/veh	8.2	0.0	11.6	26.5	0.0	0.0	35.9	0.0	28.4	33.8	0.0	29.6
LnGrp LOS	A	A	B	C	A	A	D	A	C	C	A	C
Approach Vol, veh/h		936			689			226			274	
Approach Delay, s/veh		10.9			26.5			31.1			31.0	
Approach LOS		B			C			C			C	

Timer - Assigned Phs	1	2		4		6		8
Phs Duration (G+Y+Rc), s	14.4	43.9		24.4		58.3		24.4
Change Period (Y+Rc), s	6.5	* 5.3		6.5		* 5.3		6.5
Max Green Setting (Gmax), s	25.0	* 45		35.0		* 77		35.0
Max Q Clear Time (g_c+I1), s	6.2	33.1		16.6		28.1		14.4
Green Ext Time (p_c), s	0.2	5.5		0.5		11.1		0.7

Intersection Summary	
HCM 6th Ctrl Delay	20.7
HCM 6th LOS	C

Notes

* HCM 6th computational engine requires equal clearance times for the phases crossing the barrier.

Intersection	
Int Delay, s/veh	1.4

Movement	EBL	EBT	WBT	WBR	SBL	SBR
Lane Configurations						
Traffic Vol, veh/h	35	670	610	10	25	30
Future Vol, veh/h	35	670	610	10	25	30
Conflicting Peds, #/hr	0	0	0	0	0	0
Sign Control	Free	Free	Free	Free	Stop	Stop
RT Channelized	-	None	-	None	-	None
Storage Length	-	-	-	-	0	-
Veh in Median Storage, #	-	0	0	-	0	-
Grade, %	-	0	0	-	0	-
Peak Hour Factor	92	92	92	92	92	92
Heavy Vehicles, %	3	3	4	4	2	2
Mvmt Flow	38	728	663	11	27	33

Major/Minor	Major1		Major2		Minor2	
Conflicting Flow All	674	0	-	0	1473	669
Stage 1	-	-	-	-	669	-
Stage 2	-	-	-	-	804	-
Critical Hdwy	4.13	-	-	-	6.42	6.22
Critical Hdwy Stg 1	-	-	-	-	5.42	-
Critical Hdwy Stg 2	-	-	-	-	5.42	-
Follow-up Hdwy	2.227	-	-	-	3.518	3.318
Pot Cap-1 Maneuver	912	-	-	-	140	458
Stage 1	-	-	-	-	509	-
Stage 2	-	-	-	-	440	-
Platoon blocked, %		-	-	-		
Mov Cap-1 Maneuver	912	-	-	-	130	458
Mov Cap-2 Maneuver	-	-	-	-	130	-
Stage 1	-	-	-	-	473	-
Stage 2	-	-	-	-	440	-

Approach	EB	WB	SB
HCM Control Delay, s	0.5	0	28.4
HCM LOS			D

Minor Lane/Major Mvmt	EBL	EBT	WBT	WBR	SBLn1
Capacity (veh/h)	912	-	-	-	213
HCM Lane V/C Ratio	0.042	-	-	-	0.281
HCM Control Delay (s)	9.1	0	-	-	28.4
HCM Lane LOS	A	A	-	-	D
HCM 95th %tile Q(veh)	0.1	-	-	-	1.1

Movement	EBL	EBT	EBR	WBL	WBT	WBR	NBL	NBT	NBR	SBL	SBT	SBR
Lane Configurations												
Traffic Volume (veh/h)	50	455	190	40	425	45	185	0	60	20	0	10
Future Volume (veh/h)	50	455	190	40	425	45	185	0	60	20	0	10
Initial Q (Qb), veh	0	0	0	0	0	0	0	0	0	0	0	0
Ped-Bike Adj(A_pbT)	1.00		1.00	1.00		1.00	1.00		1.00	1.00		1.00
Parking Bus, Adj	1.00	1.00	1.00	1.00	1.00	1.00	1.00	1.00	1.00	1.00	1.00	1.00
Work Zone On Approach		No			No			No			No	
Adj Sat Flow, veh/h/ln	1856	1714	1714	1841	1700	1700	1723	1792	1870	1885	1736	1885
Adj Flow Rate, veh/h	57	523	218	46	489	52	213	0	69	23	0	11
Peak Hour Factor	0.87	0.87	0.87	0.87	0.87	0.87	0.87	0.87	0.87	0.87	0.87	0.87
Percent Heavy Veh, %	3	3	3	4	4	4	2	2	2	1	1	1
Cap, veh/h	488	642	267	324	844	90	489	0	323	226	28	45
Arrive On Green	0.56	0.56	0.56	0.56	0.56	0.56	0.20	0.00	0.20	0.20	0.00	0.20
Sat Flow, veh/h	858	1149	479	707	1511	161	1468	0	1585	328	136	222
Grp Volume(v), veh/h	57	0	741	46	0	541	213	0	69	34	0	0
Grp Sat Flow(s),veh/h/ln	858	0	1627	707	0	1671	1468	0	1585	685	0	0
Q Serve(g_s), s	1.8	0.0	14.0	2.1	0.0	8.0	0.0	0.0	1.4	0.1	0.0	0.0
Cycle Q Clear(g_c), s	9.8	0.0	14.0	16.1	0.0	8.0	4.9	0.0	1.4	5.0	0.0	0.0
Prop In Lane	1.00		0.29	1.00		0.10	1.00		1.00	0.68		0.32
Lane Grp Cap(c), veh/h	488	0	909	324	0	934	489	0	323	299	0	0
V/C Ratio(X)	0.12	0.00	0.82	0.14	0.00	0.58	0.44	0.00	0.21	0.11	0.00	0.00
Avail Cap(c_a), veh/h	699	0	1310	498	0	1345	942	0	857	738	0	0
HCM Platoon Ratio	1.00	1.00	1.00	1.00	1.00	1.00	1.00	1.00	1.00	1.00	1.00	1.00
Upstream Filter(I)	1.00	0.00	1.00	1.00	0.00	1.00	1.00	0.00	1.00	1.00	0.00	0.00
Uniform Delay (d), s/veh	8.6	0.0	6.8	13.3	0.0	5.5	13.9	0.0	12.6	12.5	0.0	0.0
Incr Delay (d2), s/veh	0.1	0.0	2.7	0.2	0.0	0.6	0.6	0.0	0.3	0.2	0.0	0.0
Initial Q Delay(d3),s/veh	0.0	0.0	0.0	0.0	0.0	0.0	0.0	0.0	0.0	0.0	0.0	0.0
%ile BackOfQ(95%),veh/ln	0.4	0.0	5.0	0.5	0.0	2.5	2.6	0.0	0.8	0.4	0.0	0.0
Unsig. Movement Delay, s/veh												
LnGrp Delay(d),s/veh	8.8	0.0	9.5	13.5	0.0	6.0	14.6	0.0	12.9	12.6	0.0	0.0
LnGrp LOS	A	A	A	B	A	A	B	A	B	B	A	A
Approach Vol, veh/h		798			587			282			34	
Approach Delay, s/veh		9.4			6.6			14.1			12.6	
Approach LOS		A			A			B			B	

Timer - Assigned Phs		2		4		6		8				
Phs Duration (G+Y+Rc), s		12.2		25.7		12.2		25.7				
Change Period (Y+Rc), s		4.5		4.5		4.5		4.5				
Max Green Setting (Gmax), s		20.5		30.5		20.5		30.5				
Max Q Clear Time (g_c+I1), s		6.9		16.0		7.0		18.1				
Green Ext Time (p_c), s		1.2		4.9		0.1		3.1				

Intersection Summary		
HCM 6th Ctrl Delay		9.3
HCM 6th LOS		A

Intersection	
Int Delay, s/veh	0.2

Movement	EBL	EBT	WBT	WBR	SBL	SBR
Lane Configurations						
Traffic Vol, veh/h	0	535	500	0	5	10
Future Vol, veh/h	0	535	500	0	5	10
Conflicting Peds, #/hr	0	0	0	0	0	0
Sign Control	Free	Free	Free	Free	Stop	Stop
RT Channelized	-	None	-	None	-	None
Storage Length	-	-	-	-	0	-
Veh in Median Storage, #	-	0	0	-	0	-
Grade, %	-	0	0	-	0	-
Peak Hour Factor	92	92	92	92	92	92
Heavy Vehicles, %	2	2	4	4	2	2
Mvmt Flow	0	582	543	0	5	11

Major/Minor	Major1		Major2		Minor2	
Conflicting Flow All	-	0	-	0	1125	543
Stage 1	-	-	-	-	543	-
Stage 2	-	-	-	-	582	-
Critical Hdwy	-	-	-	-	6.42	6.22
Critical Hdwy Stg 1	-	-	-	-	5.42	-
Critical Hdwy Stg 2	-	-	-	-	5.42	-
Follow-up Hdwy	-	-	-	-	3.518	3.318
Pot Cap-1 Maneuver	0	-	-	-	227	540
Stage 1	0	-	-	-	582	-
Stage 2	0	-	-	-	559	-
Platoon blocked, %		-	-	-		
Mov Cap-1 Maneuver	-	-	-	-	227	540
Mov Cap-2 Maneuver	-	-	-	-	227	-
Stage 1	-	-	-	-	582	-
Stage 2	-	-	-	-	559	-

Approach	EB	WB	SB
HCM Control Delay, s	0	0	15.2
HCM LOS			C

Minor Lane/Major Mvmt	EBT	WBT	WBR	SBLn1
Capacity (veh/h)	-	-	-	370
HCM Lane V/C Ratio	-	-	-	0.044
HCM Control Delay (s)	-	-	-	15.2
HCM Lane LOS	-	-	-	C
HCM 95th %tile Q(veh)	-	-	-	0.1

Intersection	
Int Delay, s/veh	1.3

Movement	EBT	EBR	WBL	WBT	NBL	NBR
Lane Configurations	↑			↑	⋔	
Traffic Vol, veh/h	505	35	20	465	35	25
Future Vol, veh/h	505	35	20	465	35	25
Conflicting Peds, #/hr	0	0	0	0	0	0
Sign Control	Free	Free	Free	Free	Stop	Stop
RT Channelized	-	None	-	None	-	None
Storage Length	-	-	-	-	0	-
Veh in Median Storage, #	0	-	-	0	0	-
Grade, %	0	-	-	0	0	-
Peak Hour Factor	92	92	92	92	92	92
Heavy Vehicles, %	2	2	4	4	2	2
Mvmt Flow	549	38	22	505	38	27

Major/Minor	Major1		Major2		Minor1	
Conflicting Flow All	0	0	587	0	1117	568
Stage 1	-	-	-	-	568	-
Stage 2	-	-	-	-	549	-
Critical Hdwy	-	-	4.14	-	6.42	6.22
Critical Hdwy Stg 1	-	-	-	-	5.42	-
Critical Hdwy Stg 2	-	-	-	-	5.42	-
Follow-up Hdwy	-	-	2.236	-	3.518	3.318
Pot Cap-1 Maneuver	-	-	978	-	229	522
Stage 1	-	-	-	-	567	-
Stage 2	-	-	-	-	579	-
Platoon blocked, %	-	-		-		
Mov Cap-1 Maneuver	-	-	978	-	222	522
Mov Cap-2 Maneuver	-	-	-	-	222	-
Stage 1	-	-	-	-	567	-
Stage 2	-	-	-	-	561	-

Approach	EB	WB	NB
HCM Control Delay, s	0	0.4	20.8
HCM LOS			C

Minor Lane/Major Mvmt	NBLn1	EBT	EBR	WBL	WBT
Capacity (veh/h)	292	-	-	978	-
HCM Lane V/C Ratio	0.223	-	-	0.022	-
HCM Control Delay (s)	20.8	-	-	8.8	-
HCM Lane LOS	C	-	-	A	-
HCM 95th %tile Q(veh)	0.8	-	-	0.1	-

Movement	EBL	EBT	EBR	WBL	WBT	WBR	NBL	NBT	NBR	SBL	SBT	SBR
Lane Configurations												
Traffic Volume (veh/h)	60	340	130	65	355	85	75	45	40	60	40	55
Future Volume (veh/h)	60	340	130	65	355	85	75	45	40	60	40	55
Initial Q (Qb), veh	0	0	0	0	0	0	0	0	0	0	0	0
Ped-Bike Adj(A_pbT)	1.00		1.00	1.00		0.98	1.00		0.98	1.00		1.00
Parking Bus, Adj	1.00	1.00	1.00	1.00	1.00	1.00	1.00	1.00	1.00	1.00	1.00	1.00
Work Zone On Approach		No			No			No			No	
Adj Sat Flow, veh/h/ln	1870	1728	1728	1870	1764	1870	1736	1736	1736	1885	1736	1736
Adj Flow Rate, veh/h	73	415	159	79	433	104	91	55	49	73	49	67
Peak Hour Factor	0.82	0.82	0.82	0.82	0.82	0.82	0.82	0.82	0.82	0.82	0.82	0.82
Percent Heavy Veh, %	2	2	2	2	2	2	1	1	1	1	1	1
Cap, veh/h	512	593	227	413	879	773	267	118	75	558	150	205
Arrive On Green	0.50	0.50	0.50	0.50	0.50	0.50	0.23	0.23	0.23	0.23	0.23	0.23
Sat Flow, veh/h	868	1190	456	839	1764	1552	464	522	331	1300	664	908
Grp Volume(v), veh/h	73	0	574	79	433	104	195	0	0	73	0	116
Grp Sat Flow(s),veh/h/ln	868	0	1646	839	1764	1552	1317	0	0	1300	0	1573
Q Serve(g_s), s	2.0	0.0	8.8	2.6	5.3	1.2	2.5	0.0	0.0	0.0	0.0	2.0
Cycle Q Clear(g_c), s	7.3	0.0	8.8	11.4	5.3	1.2	4.5	0.0	0.0	1.2	0.0	2.0
Prop In Lane	1.00		0.28	1.00		1.00	0.47		0.25	1.00		0.58
Lane Grp Cap(c), veh/h	512	0	820	413	879	773	459	0	0	558	0	355
V/C Ratio(X)	0.14	0.00	0.70	0.19	0.49	0.13	0.42	0.00	0.00	0.13	0.00	0.33
Avail Cap(c_a), veh/h	784	0	1337	677	1433	1261	1178	0	0	1241	0	1181
HCM Platoon Ratio	1.00	1.00	1.00	1.00	1.00	1.00	1.00	1.00	1.00	1.00	1.00	1.00
Upstream Filter(I)	1.00	0.00	1.00	1.00	1.00	1.00	1.00	0.00	0.00	1.00	0.00	1.00
Uniform Delay (d), s/veh	7.9	0.0	6.3	10.7	5.4	4.4	11.5	0.0	0.0	10.2	0.0	10.6
Incr Delay (d2), s/veh	0.1	0.0	1.1	0.2	0.4	0.1	0.6	0.0	0.0	0.1	0.0	0.5
Initial Q Delay(d3),s/veh	0.0	0.0	0.0	0.0	0.0	0.0	0.0	0.0	0.0	0.0	0.0	0.0
%ile BackOfQ(95%),veh/ln	0.5	0.0	3.1	0.7	1.7	0.3	2.0	0.0	0.0	0.6	0.0	1.1
Unsig. Movement Delay, s/veh												
LnGrp Delay(d),s/veh	8.0	0.0	7.4	10.9	5.9	4.5	12.1	0.0	0.0	10.3	0.0	11.1
LnGrp LOS	A	A	A	B	A	A	B	A	A	B	A	B
Approach Vol, veh/h		647			616			195			189	
Approach Delay, s/veh		7.5			6.3			12.1			10.8	
Approach LOS		A			A			B			B	

Timer - Assigned Phs	2	4	6	8
Phs Duration (G+Y+Rc), s	11.9	20.8	11.9	20.8
Change Period (Y+Rc), s	4.5	4.5	4.5	4.5
Max Green Setting (Gmax), s	24.5	26.5	24.5	26.5
Max Q Clear Time (g_c+I1), s	6.5	10.8	4.0	13.4
Green Ext Time (p_c), s	1.1	4.0	0.8	2.9

Intersection Summary	
HCM 6th Ctrl Delay	8.0
HCM 6th LOS	A

HCM 6th Signalized Intersection Summary
1: Jackson Dr & WIS-60

05/17/2020

Movement	EBL	EBT	EBR	WBL	WBT	WBR	NBL	NBT	NBR	SBL	SBT	SBR
Lane Configurations												
Traffic Volume (veh/h)	65	525	85	60	510	80	95	45	60	75	35	80
Future Volume (veh/h)	65	525	85	60	510	80	95	45	60	75	35	80
Initial Q (Qb), veh	0	0	0	0	0	0	0	0	0	0	0	0
Ped-Bike Adj(A_pbT)	1.00		1.00	1.00		1.00	1.00		1.00	1.00		1.00
Parking Bus, Adj	1.00	1.00	1.00	1.00	1.00	1.00	1.00	1.00	1.00	1.00	1.00	1.00
Work Zone On Approach		No			No			No			No	
Adj Sat Flow, veh/h/ln	1870	1659	1659	1870	1870	1870	1885	1672	1672	1870	1659	1659
Adj Flow Rate, veh/h	66	536	87	61	520	82	97	46	61	77	36	82
Peak Hour Factor	0.98	0.98	0.98	0.98	0.98	0.98	0.98	0.98	0.98	0.98	0.98	0.98
Percent Heavy Veh, %	2	2	2	2	2	2	1	1	1	2	2	2
Cap, veh/h	494	901	146	105	649	98	244	117	155	256	81	184
Arrive On Green	0.08	0.65	0.65	0.47	0.47	0.47	0.18	0.18	0.18	0.18	0.18	0.18
Sat Flow, veh/h	1781	1392	226	101	1386	210	1284	652	864	1287	450	1025
Grp Volume(v), veh/h	66	0	623	663	0	0	97	0	107	77	0	118
Grp Sat Flow(s),veh/h/ln	1781	0	1617	1697	0	0	1284	0	1516	1287	0	1474
Q Serve(g_s), s	1.1	0.0	15.1	12.2	0.0	0.0	5.0	0.0	4.2	3.8	0.0	4.9
Cycle Q Clear(g_c), s	1.1	0.0	15.1	22.7	0.0	0.0	9.8	0.0	4.2	8.1	0.0	4.9
Prop In Lane	1.00		0.14	0.09		0.12	1.00		0.57	1.00		0.69
Lane Grp Cap(c), veh/h	494	0	1047	852	0	0	244	0	272	256	0	265
V/C Ratio(X)	0.13	0.00	0.60	0.78	0.00	0.00	0.40	0.00	0.39	0.30	0.00	0.45
Avail Cap(c_a), veh/h	999	0	1816	1166	0	0	674	0	779	686	0	757
HCM Platoon Ratio	1.00	1.00	1.00	1.00	1.00	1.00	1.00	1.00	1.00	1.00	1.00	1.00
Upstream Filter(I)	1.00	0.00	1.00	1.00	0.00	0.00	1.00	0.00	1.00	1.00	0.00	1.00
Uniform Delay (d), s/veh	6.2	0.0	6.9	15.4	0.0	0.0	29.3	0.0	24.7	28.2	0.0	24.9
Incr Delay (d2), s/veh	0.0	0.0	0.8	3.0	0.0	0.0	0.4	0.0	0.3	0.2	0.0	0.4
Initial Q Delay(d3),s/veh	0.0	0.0	0.0	0.0	0.0	0.0	0.0	0.0	0.0	0.0	0.0	0.0
%ile BackOfQ(95%),veh/ln	0.7	0.0	7.7	13.4	0.0	0.0	2.7	0.0	2.7	2.1	0.0	3.0
Unsig. Movement Delay, s/veh												
LnGrp Delay(d),s/veh	6.2	0.0	7.7	18.3	0.0	0.0	29.7	0.0	25.0	28.5	0.0	25.4
LnGrp LOS	A	A	A	B	A	A	C	A	C	C	A	C
Approach Vol, veh/h		689			663			204			195	
Approach Delay, s/veh		7.6			18.3			27.2			26.6	
Approach LOS		A			B			C			C	

Timer - Assigned Phs	1	2		4		6		8				
Phs Duration (G+Y+Rc), s	12.2	37.2		18.7		49.4		18.7				
Change Period (Y+Rc), s	6.5	* 5.3		6.5		* 5.3		6.5				
Max Green Setting (Gmax), s	25.0	* 45		35.0		* 77		35.0				
Max Q Clear Time (g_c+I1), s	3.1	24.7		11.8		17.1		10.1				
Green Ext Time (p_c), s	0.0	7.2		0.4		8.5		0.4				

Intersection Summary												
HCM 6th Ctrl Delay			16.1									
HCM 6th LOS			B									

Notes

* HCM 6th computational engine requires equal clearance times for the phases crossing the barrier.

Intersection	
Int Delay, s/veh	1.4

Movement	EBL	EBT	WBT	WBR	SBL	SBR
Lane Configurations						
Traffic Vol, veh/h	40	620	610	20	20	40
Future Vol, veh/h	40	620	610	20	20	40
Conflicting Peds, #/hr	0	0	0	0	0	0
Sign Control	Free	Free	Free	Free	Stop	Stop
RT Channelized	-	None	-	None	-	None
Storage Length	-	-	-	-	0	-
Veh in Median Storage, #	-	0	0	-	0	-
Grade, %	-	0	0	-	0	-
Peak Hour Factor	92	92	92	92	92	92
Heavy Vehicles, %	3	3	2	2	2	2
Mvmt Flow	43	674	663	22	22	43

Major/Minor	Major1		Major2		Minor2	
Conflicting Flow All	685	0	-	0	1434	674
Stage 1	-	-	-	-	674	-
Stage 2	-	-	-	-	760	-
Critical Hdwy	4.13	-	-	-	6.42	6.22
Critical Hdwy Stg 1	-	-	-	-	5.42	-
Critical Hdwy Stg 2	-	-	-	-	5.42	-
Follow-up Hdwy	2.227	-	-	-	3.518	3.318
Pot Cap-1 Maneuver	904	-	-	-	147	455
Stage 1	-	-	-	-	506	-
Stage 2	-	-	-	-	462	-
Platoon blocked, %		-	-	-		
Mov Cap-1 Maneuver	904	-	-	-	136	455
Mov Cap-2 Maneuver	-	-	-	-	136	-
Stage 1	-	-	-	-	468	-
Stage 2	-	-	-	-	462	-

Approach	EB	WB	SB
HCM Control Delay, s	0.6	0	23.9
HCM LOS			C

Minor Lane/Major Mvmt	EBL	EBT	WBT	WBR	SBLn1
Capacity (veh/h)	904	-	-	-	255
HCM Lane V/C Ratio	0.048	-	-	-	0.256
HCM Control Delay (s)	9.2	0	-	-	23.9
HCM Lane LOS	A	A	-	-	C
HCM 95th %tile Q(veh)	0.2	-	-	-	1

Movement	EBL	EBT	EBR	WBL	WBT	WBR	NBL	NBT	NBR	SBL	SBT	SBR
Lane Configurations												
Traffic Volume (veh/h)	20	410	210	55	420	20	175	0	45	20	0	35
Future Volume (veh/h)	20	410	210	55	420	20	175	0	45	20	0	35
Initial Q (Qb), veh	0	0	0	0	0	0	0	0	0	0	0	0
Ped-Bike Adj(A_pbT)	1.00		1.00	1.00		1.00	1.00		1.00	1.00		1.00
Parking Bus, Adj	1.00	1.00	1.00	1.00	1.00	1.00	1.00	1.00	1.00	1.00	1.00	1.00
Work Zone On Approach		No			No			No			No	
Adj Sat Flow, veh/h/ln	1856	1714	1714	1856	1714	1714	1723	1792	1870	1723	1723	1723
Adj Flow Rate, veh/h	21	436	223	59	447	21	186	0	48	21	0	37
Peak Hour Factor	0.94	0.94	0.94	0.94	0.94	0.94	0.94	0.94	0.94	0.94	0.94	0.94
Percent Heavy Veh, %	3	3	3	3	3	3	2	2	2	2	2	2
Cap, veh/h	558	576	294	394	875	41	502	0	287	193	40	142
Arrive On Green	0.54	0.54	0.54	0.54	0.54	0.54	0.18	0.00	0.18	0.18	0.00	0.18
Sat Flow, veh/h	917	1068	546	769	1624	76	1533	0	1585	223	222	784
Grp Volume(v), veh/h	21	0	659	59	0	468	186	0	48	58	0	0
Grp Sat Flow(s),veh/h/ln	917	0	1615	769	0	1700	1533	0	1585	1228	0	0
Q Serve(g_s), s	0.5	0.0	10.2	2.1	0.0	5.6	0.0	0.0	0.8	0.0	0.0	0.0
Cycle Q Clear(g_c), s	6.1	0.0	10.2	12.3	0.0	5.6	3.2	0.0	0.8	3.3	0.0	0.0
Prop In Lane	1.00		0.34	1.00		0.04	1.00		1.00	0.36		0.64
Lane Grp Cap(c), veh/h	558	0	870	394	0	916	502	0	287	375	0	0
V/C Ratio(X)	0.04	0.00	0.76	0.15	0.00	0.51	0.37	0.00	0.17	0.15	0.00	0.00
Avail Cap(c_a), veh/h	934	0	1533	710	0	1614	1102	0	1011	1004	0	0
HCM Platoon Ratio	1.00	1.00	1.00	1.00	1.00	1.00	1.00	1.00	1.00	1.00	1.00	1.00
Upstream Filter(I)	1.00	0.00	1.00	1.00	0.00	1.00	1.00	0.00	1.00	1.00	0.00	0.00
Uniform Delay (d), s/veh	6.7	0.0	5.8	10.6	0.0	4.7	12.1	0.0	11.1	11.2	0.0	0.0
Incr Delay (d2), s/veh	0.0	0.0	1.4	0.2	0.0	0.4	0.5	0.0	0.3	0.2	0.0	0.0
Initial Q Delay(d3),s/veh	0.0	0.0	0.0	0.0	0.0	0.0	0.0	0.0	0.0	0.0	0.0	0.0
%ile BackOfQ(95%),veh/ln	0.1	0.0	2.6	0.5	0.0	1.4	1.9	0.0	0.5	0.5	0.0	0.0
Unsig. Movement Delay, s/veh												
LnGrp Delay(d),s/veh	6.7	0.0	7.2	10.7	0.0	5.2	12.5	0.0	11.4	11.4	0.0	0.0
LnGrp LOS	A	A	A	B	A	A	B	A	B	B	A	A
Approach Vol, veh/h		680			527			234			58	
Approach Delay, s/veh		7.1			5.8			12.3			11.4	
Approach LOS		A			A			B			B	

Timer - Assigned Phs		2		4		6		8				
Phs Duration (G+Y+Rc), s		10.3		21.8		10.3		21.8				
Change Period (Y+Rc), s		4.5		4.5		4.5		4.5				
Max Green Setting (Gmax), s		20.5		30.5		20.5		30.5				
Max Q Clear Time (g_c+I1), s		5.2		12.2		5.3		14.3				
Green Ext Time (p_c), s		1.1		4.5		0.2		3.0				

Intersection Summary												
HCM 6th Ctrl Delay			7.6									
HCM 6th LOS			A									

Intersection	
Int Delay, s/veh	0

Movement	EBL	EBT	WBT	WBR	SBL	SBR
Lane Configurations						
Traffic Vol, veh/h	5	470	495	0	0	0
Future Vol, veh/h	5	470	495	0	0	0
Conflicting Peds, #/hr	0	0	0	0	0	0
Sign Control	Free	Free	Free	Free	Stop	Stop
RT Channelized	-	None	-	None	-	None
Storage Length	-	-	-	-	0	-
Veh in Median Storage, #	-	0	0	-	0	-
Grade, %	-	0	0	-	0	-
Peak Hour Factor	92	92	92	92	92	92
Heavy Vehicles, %	2	2	3	3	2	2
Mvmt Flow	5	511	538	0	0	0

Major/Minor	Major1		Major2		Minor2	
Conflicting Flow All	538	0	-	0	1059	538
Stage 1	-	-	-	-	538	-
Stage 2	-	-	-	-	521	-
Critical Hdwy	4.12	-	-	-	6.42	6.22
Critical Hdwy Stg 1	-	-	-	-	5.42	-
Critical Hdwy Stg 2	-	-	-	-	5.42	-
Follow-up Hdwy	2.218	-	-	-	3.518	3.318
Pot Cap-1 Maneuver	1030	-	-	-	249	543
Stage 1	-	-	-	-	585	-
Stage 2	-	-	-	-	596	-
Platoon blocked, %		-	-	-		
Mov Cap-1 Maneuver	1030	-	-	-	247	543
Mov Cap-2 Maneuver	-	-	-	-	247	-
Stage 1	-	-	-	-	581	-
Stage 2	-	-	-	-	596	-

Approach	EB	WB	SB
HCM Control Delay, s	0.1	0	0
HCM LOS			A

Minor Lane/Major Mvmt	EBL	EBT	WBT	WBR	SBLn1
Capacity (veh/h)	1030	-	-	-	-
HCM Lane V/C Ratio	0.005	-	-	-	-
HCM Control Delay (s)	8.5	-	-	-	0
HCM Lane LOS	A	-	-	-	A
HCM 95th %tile Q(veh)	0	-	-	-	-

Intersection	
Int Delay, s/veh	1.5

Movement	EBT	EBR	WBL	WBT	NBL	NBR
Lane Configurations	↑			↑	⋔	
Traffic Vol, veh/h	415	55	20	450	45	20
Future Vol, veh/h	415	55	20	450	45	20
Conflicting Peds, #/hr	0	0	0	0	0	0
Sign Control	Free	Free	Free	Free	Stop	Stop
RT Channelized	-	None	-	None	-	None
Storage Length	-	-	-	-	0	-
Veh in Median Storage, #	0	-	-	0	0	-
Grade, %	0	-	-	0	0	-
Peak Hour Factor	92	92	92	92	92	92
Heavy Vehicles, %	2	2	3	3	2	2
Mvmt Flow	451	60	22	489	49	22

Major/Minor	Major1		Major2		Minor1	
Conflicting Flow All	0	0	511	0	1014	481
Stage 1	-	-	-	-	481	-
Stage 2	-	-	-	-	533	-
Critical Hdwy	-	-	4.13	-	6.42	6.22
Critical Hdwy Stg 1	-	-	-	-	5.42	-
Critical Hdwy Stg 2	-	-	-	-	5.42	-
Follow-up Hdwy	-	-	2.227	-	3.518	3.318
Pot Cap-1 Maneuver	-	-	1049	-	264	585
Stage 1	-	-	-	-	622	-
Stage 2	-	-	-	-	588	-
Platoon blocked, %	-	-		-		
Mov Cap-1 Maneuver	-	-	1049	-	256	585
Mov Cap-2 Maneuver	-	-	-	-	256	-
Stage 1	-	-	-	-	622	-
Stage 2	-	-	-	-	571	-

Approach	EB	WB	NB
HCM Control Delay, s	0	0.4	20
HCM LOS			C

Minor Lane/Major Mvmt	NBLn1	EBT	EBR	WBL	WBT
Capacity (veh/h)	310	-	-	1049	-
HCM Lane V/C Ratio	0.228	-	-	0.021	-
HCM Control Delay (s)	20	-	-	8.5	-
HCM Lane LOS	C	-	-	A	-
HCM 95th %tile Q(veh)	0.9	-	-	0.1	-

Movement	EBL	EBT	EBR	WBL	WBT	WBR	NBL	NBT	NBR	SBL	SBT	SBR
Lane Configurations												
Traffic Volume (veh/h)	55	285	95	55	315	40	75	35	40	60	35	80
Future Volume (veh/h)	55	285	95	55	315	40	75	35	40	60	35	80
Initial Q (Qb), veh	0	0	0	0	0	0	0	0	0	0	0	0
Ped-Bike Adj(A_pbT)	1.00		1.00	1.00		1.00	1.00		1.00	1.00		1.00
Parking Bus, Adj	1.00	1.00	1.00	1.00	1.00	1.00	1.00	1.00	1.00	1.00	1.00	1.00
Work Zone On Approach		No			No			No			No	
Adj Sat Flow, veh/h/ln	1870	1728	1728	1856	1750	1856	1723	1723	1723	1885	1736	1736
Adj Flow Rate, veh/h	60	310	103	60	342	43	82	38	43	65	38	87
Peak Hour Factor	0.92	0.92	0.92	0.92	0.92	0.92	0.92	0.92	0.92	0.92	0.92	0.92
Percent Heavy Veh, %	2	2	2	3	3	3	2	2	2	1	1	1
Cap, veh/h	562	516	171	502	728	654	321	99	73	645	105	240
Arrive On Green	0.42	0.42	0.42	0.42	0.42	0.42	0.22	0.22	0.22	0.22	0.22	0.22
Sat Flow, veh/h	998	1241	412	965	1750	1572	466	444	326	1328	469	1074
Grp Volume(v), veh/h	60	0	413	60	342	43	163	0	0	65	0	125
Grp Sat Flow(s),veh/h/ln	998	0	1653	965	1750	1572	1236	0	0	1328	0	1543
Q Serve(g_s), s	1.2	0.0	4.8	1.3	3.5	0.4	1.5	0.0	0.0	0.0	0.0	1.7
Cycle Q Clear(g_c), s	4.7	0.0	4.8	6.1	3.5	0.4	3.2	0.0	0.0	0.7	0.0	1.7
Prop In Lane	1.00		0.25	1.00		1.00	0.50		0.26	1.00		0.70
Lane Grp Cap(c), veh/h	562	0	687	502	728	654	493	0	0	645	0	344
V/C Ratio(X)	0.11	0.00	0.60	0.12	0.47	0.07	0.33	0.00	0.00	0.10	0.00	0.36
Avail Cap(c_a), veh/h	1169	0	1692	1089	1791	1609	1563	0	0	1707	0	1579
HCM Platoon Ratio	1.00	1.00	1.00	1.00	1.00	1.00	1.00	1.00	1.00	1.00	1.00	1.00
Upstream Filter(I)	1.00	0.00	1.00	1.00	1.00	1.00	1.00	0.00	0.00	1.00	0.00	1.00
Uniform Delay (d), s/veh	7.0	0.0	5.7	8.1	5.3	4.4	8.7	0.0	0.0	7.8	0.0	8.2
Incr Delay (d2), s/veh	0.1	0.0	0.8	0.1	0.5	0.0	0.4	0.0	0.0	0.1	0.0	0.6
Initial Q Delay(d3),s/veh	0.0	0.0	0.0	0.0	0.0	0.0	0.0	0.0	0.0	0.0	0.0	0.0
%ile BackOfQ(95%),veh/ln	0.3	0.0	1.4	0.3	0.9	0.1	1.0	0.0	0.0	0.4	0.0	0.8
Unsig. Movement Delay, s/veh												
LnGrp Delay(d),s/veh	7.1	0.0	6.5	8.2	5.8	4.4	9.1	0.0	0.0	7.9	0.0	8.8
LnGrp LOS	A	A	A	A	A	A	A	A	A	A	A	A
Approach Vol, veh/h		473			445			163			190	
Approach Delay, s/veh		6.6			6.0			9.1			8.5	
Approach LOS		A			A			A			A	

Timer - Assigned Phs	2	4	6	8
Phs Duration (G+Y+Rc), s	10.1	14.9	10.1	14.9
Change Period (Y+Rc), s	4.5	4.5	4.5	4.5
Max Green Setting (Gmax), s	25.5	25.5	25.5	25.5
Max Q Clear Time (g_c+I1), s	5.2	6.8	3.7	8.1
Green Ext Time (p_c), s	0.9	2.8	0.9	2.2

Intersection Summary	
HCM 6th Ctrl Delay	7.0
HCM 6th LOS	A

Appendix I: Warrant Analysis for Intersection Traffic Control

Eagle Signal Warrant Analysis - Background Horizon
Eagle Signal Warrant Analysis - Build Horizon Year Alt 1 Build
Eagle Signal Warrant Analysis - Build Horizon Year Alt 2 Build
Ridgeway Signal Warrant Analysis - Build Horizon Year Alt 2 Build
Ridgeway Signal Warrant Analysis -Build Horizon Year Alt 1 Build

Wisconsin Department of Transportation Traffic Signal Warrant Summary Worksheet

100%

The Worksheet(s) attached are provided as an attachment to the Engineering Investigation Study for:

Intersection: WIS 60 and Eagle Drive
County: Washington
Village: Jackson

Major Street: WIS 60
Critical Approach Speed: 25 mph
Lanes: 1 lane

Minor Street: Eagle Drive
Critical Approach Speed: 25 mph
Lanes: 1 lane

% Right Turns Included
From North (SB) 100%
From East (WB) 0%
From South (NB) 100%
From West (EB) 100%

In built-up area of isolated community of < 10,000 population? No
Total number of approaches at intersection? 4 or more
If it is a "T" intersection, inflate minor threshold to 150%?
Manually set volume level? No

Analysis based on PROJECTED volume data.

Forecast Year	Within 5 Years of Construction?	Time (HH:MM)			
		From	AM / PM	To	AM / PM
2035	Yes	6	AM	9	AM
2035	Yes	3	PM	6	PM

Warrant Evaluation Summary	Warrant Met:
Warrant 1: Eight - Hour Vehicular Volume	**No**
Condition A: Minimum Vehicular Volume	No
Condition B: Interruption of Continuous Traffic	No
Condition C: Combination: 80% of A and B	No
Warrant 2: Four-Hour Volume	**No**
Warrant 3: Peak Hour Volume	**No**
Warrant 4: Pedestrian Volume	**N/A**
Criterion A: Four-Hour	
Criterion B: Peak-Hour	
Warrant 5: School Crossing	**N/A**
Warrant 6: Coordinated Signal System	**N/A**
Warrant 7: Crash Experience	**N/A**
Warrant 8: Roadway Network	**N/A**
Warrant 9: Intersection Near a Grade Crossing	**N/A**

Warrant Analysis Conducted By:
Name: Sandra Herbers
Agency: SRF Consulting
Date: 5/1/2020

Warrant 1: Eight - Hour Vehicular Volume 100%

Warrant Evaluated? Yes **Warrant Satisfied? No** **Manually Set To:**

Condition A : Min. Veh. Volume		
Volume Level	100%	80%
Major Rd. Req	500	400
Minor Rd. Req	150	120
Number of Hours	4	4

Satisfied? No

Condition B: Interruption of Continuous Traffic		
Volume Level	100%	80%
Major Rd. Req	750	600
Minor Rd. Req	75	60
Number of Hours	2	4

Satisfied? No

Condition C: Combination of A & B at 80%

Satisfied? No

6:00 AM Enter Start Time (Military Time) (HH:MM)

Time Period	From	To	Major Road: Both App. (VPH)	Minor Road: High App. (VPH)	Total
1	6:00	7:00	474	76	550.252
2	7:00	8:00	712	168	880
3	8:00	9:00	554	78	631.664
4	9:00	10:00	0	0	0
5	10:00	11:00	0	0	0
6	11:00	12:00	0	0	0
7	12:00	13:00	0	0	0
8	13:00	14:00	0	0	0
9	14:00	15:00	0	0	0
10	15:00	16:00	727	151	877.341
11	16:00	17:00	790	152	942
12	17:00	18:00	803	159	962.355
13	18:00	19:00	0	0	0
14	19:00	20:00	0	0	0
15	20:00	21:00	0	0	0
16	21:00	22:00	0	0	0

Warrant 2: Four-Hour Volume 100%

Warrant Evaluated? Yes
Warrant Satisfied? No
Manually Set To:

Hour Start	17:00	16:00	7:00	15:00
Major Road Vol.	802.908	790	712	726.625
Minor Road Vol.	159.447	152	168	150.716

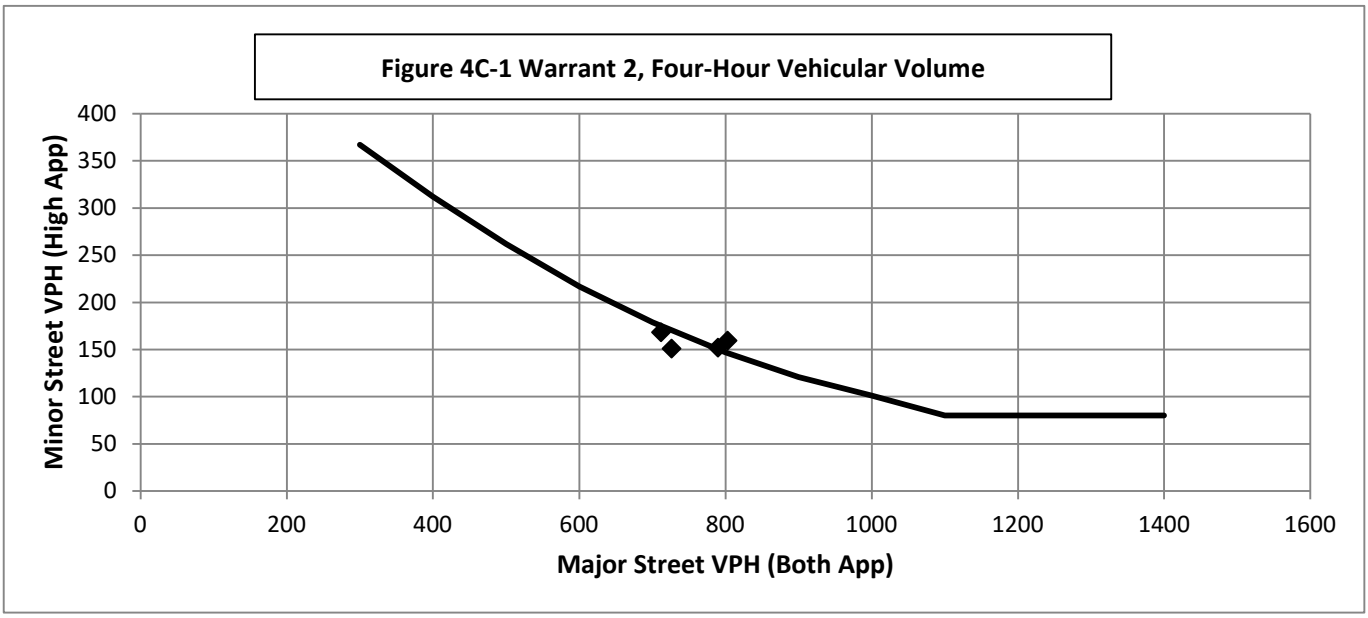

Warrant 3: Peak Hour Volume 100%

Warrant Evaluated? Yes **Warrant Satisfied? No** **Manually Set To:**

Condition justifying use of warrant:

Criteria		Met?
Delay on Minor Approach	4	Yes
Volume on Minor Approach	100	Yes
Total Entering Volume (veh/h)	800	

Manually Set Peak Hour? No

Peak Hour	Major Road Vol. (Both App.)	Minor Road Vol. (High App.)
17:00	802.9077787	159.4468864

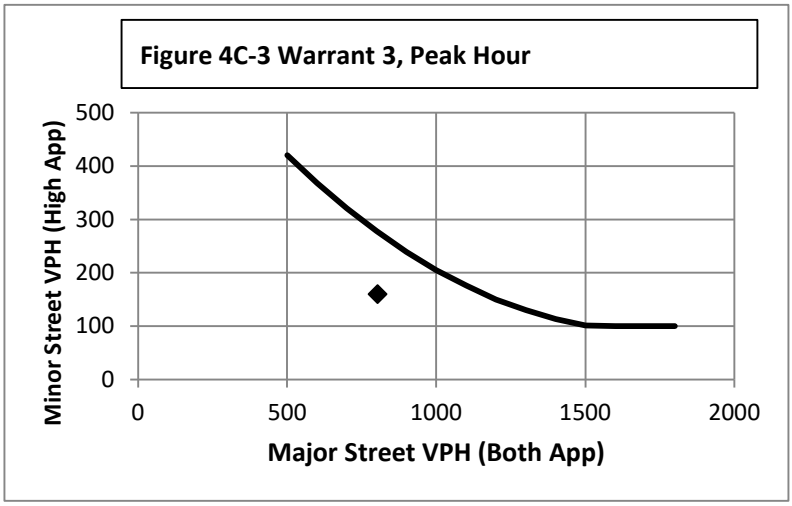

Warrant 4: Pedestrian Volume 100%

Warrant Evaluated? No **Warrant Satisfied? N/A** **Manually Set To:**

Criterion A: Four Hour

Hour (Start)	Pedestrian Volume	Major Road Vol.
		0
		0
		0
		0

Manually Set Major Rd Vol?

Avg. walk speed less than 3.5 ft/s?

Criterion A Satisfied?

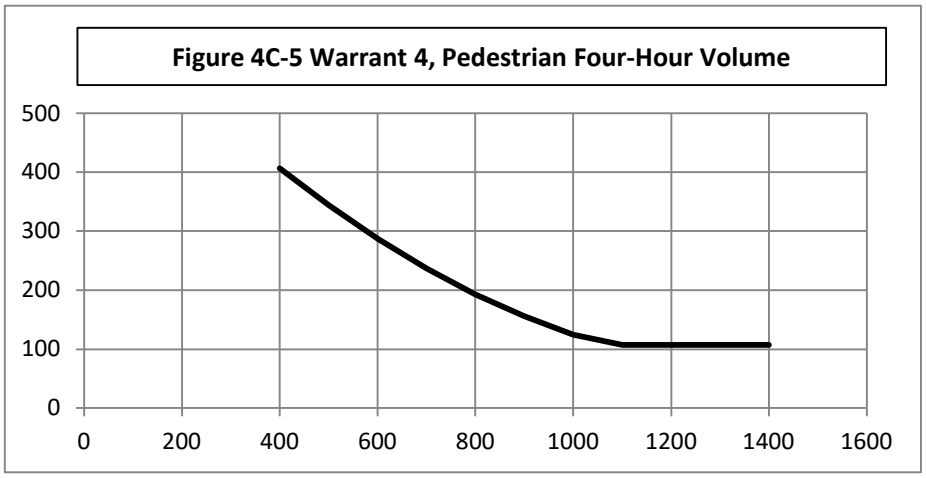

Criterion B: Peak Hour

Peak Hour	Pedestrian Vol.	Major Road Vol.
0:00	0	0

Criterion B Satisfied?

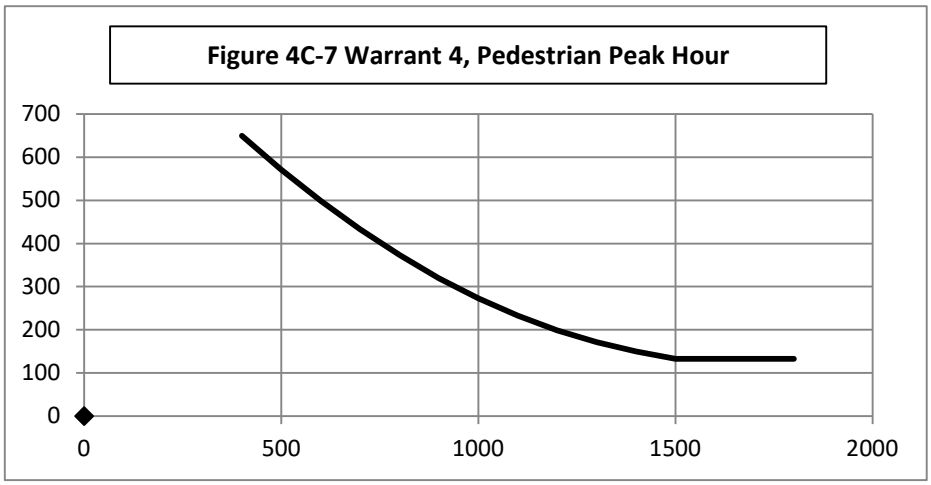

Wisconsin Department of Transportation Traffic Signal Warrant Summary Worksheet

100%

The Worksheet(s) attached are provided as an attachment to the Engineering Investigation Study for:

Intersection: WIS 60 and Eagle Drive
County: Washington
Village: Jackson

Major Street: WIS 60
Critical Approach Speed: 25 mph
Lanes: 1 lane

Minor Street: Eagle Drive
Critical Approach Speed: 25 mph
Lanes: 1 lane

% Right Turns Included
From North (SB) 100%
From East (WB) 0%
From South (NB) 100%
From West (EB) 100%

In built-up area of isolated community of < 10,000 population? No
Total number of approaches at intersection? 4 or more
If it is a "T" intersection, inflate minor threshold to 150%?
Manually set volume level? No

Analysis based on PROJECTED volume data.

Forecast Year	Within 5 Years of Construction?	Time (HH:MM)			
		From	AM / PM	To	AM / PM
2030	yes	6	AM	9	AM
2030	yes	3	PM	6	PM

Warrant Evaluation Summary	Warrant Met:
Warrant 1: Eight - Hour Vehicular Volume	**No**
Condition A: Minimum Vehicular Volume	No
Condition B: Interruption of Continuous Traffic	No
Condition C: Combination: 80% of A and B	No
Warrant 2: Four-Hour Volume	**Yes**
Warrant 3: Peak Hour Volume	**Yes**
Warrant 4: Pedestrian Volume	**N/A**
Criterion A: Four-Hour	
Criterion B: Peak-Hour	
Warrant 5: School Crossing	**N/A**
Warrant 6: Coordinated Signal System	**N/A**
Warrant 7: Crash Experience	**N/A**
Warrant 8: Roadway Network	**N/A**
Warrant 9: Intersection Near a Grade Crossing	**N/A**

Warrant Analysis Conducted By:

Name: Sandra Herbers
Agency: SRF Consulting
Date: 5/4/2020

Warrant 1: Eight - Hour Vehicular Volume 100%

Warrant Evaluated? Yes **Warrant Satisfied? No** **Manually Set To:**

Condition A : Min. Veh. Volume		
Volume Level	100%	80%
Major Rd. Req	500	400
Minor Rd. Req	150	120
Number of Hours	4	4

Satisfied? No

Condition B: Interruption of Continuous Traffic		
Volume Level	100%	80%
Major Rd. Req	750	600
Minor Rd. Req	75	60
Number of Hours	4	5

Satisfied? No

Condition C: Combination of A & B at 80%

Satisfied? No

6:00 AM Enter Start Time (Military Time) (HH:MM)

Time Period	From	To	Major Road: Both App. (VPH)	Minor Road: High App. (VPH)	Total
1	6:00	7:00	534	79	612.49
2	7:00	8:00	817	173	990
3	8:00	9:00	677	105	782.27
4	9:00	10:00	0	0	0
5	10:00	11:00	0	0	0
6	11:00	12:00	0	0	0
7	12:00	13:00	0	0	0
8	13:00	14:00	0	0	0
9	14:00	15:00	0	0	0
10	15:00	16:00	865	224	1088.5
11	16:00	17:00	940	211	1150.71
12	17:00	18:00	963	222	1185.09
13	18:00	19:00	0	0	0
14	19:00	20:00	0	0	0
15	20:00	21:00	0	0	0
16	21:00	22:00	0	0	0

Warrant 2: Four-Hour Volume 100%

Warrant Evaluated? Yes
Warrant Satisfied? Yes
Manually Set To:

Hour Start	17:00	16:00	15:00	7:00
Major Road Vol.	962.908	939.633	864.842	817
Minor Road Vol.	222.185	211.077	223.66	173

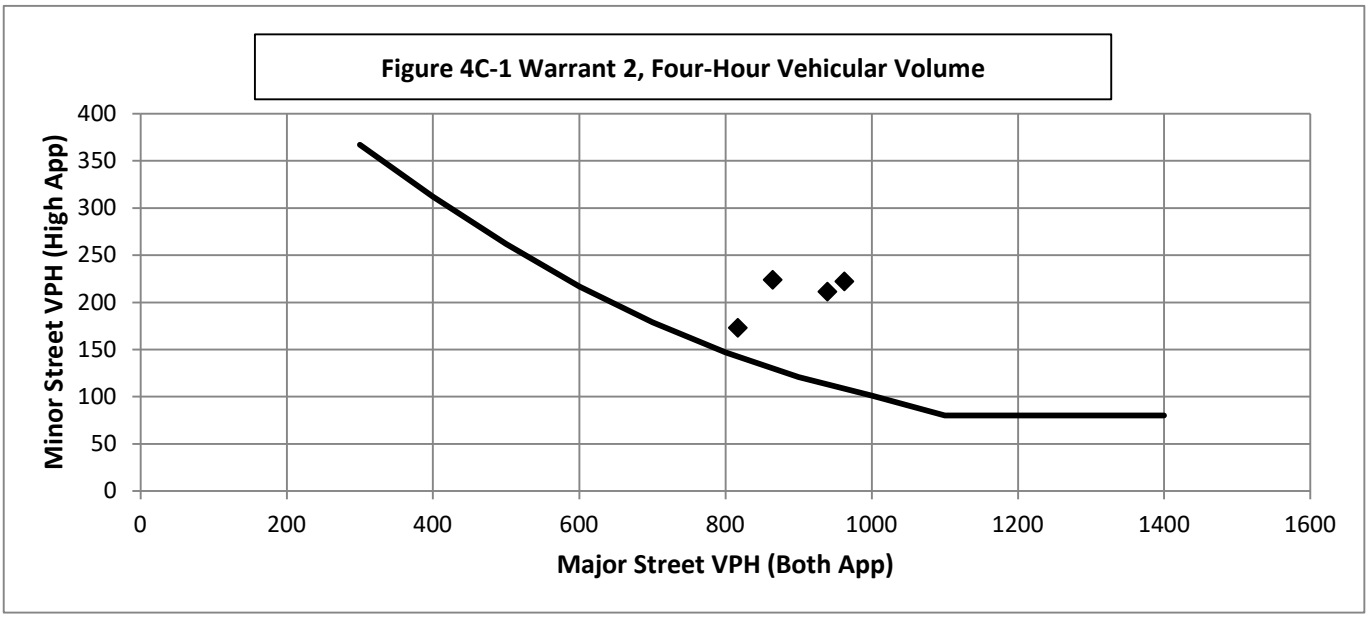

Warrant 3: Peak Hour Volume 100%

Warrant Evaluated? Yes **Warrant Satisfied? Yes** **Manually Set To:**

Condition justifying use of warrant:

Criteria		Met?
Delay on Minor Approach	4	Yes
Volume on Minor Approach	100	Yes
Total Entering Volume (veh/h)	800	

Manually Set Peak Hour? No

Peak Hour	Major Road Vol. (Both App.)	Minor Road Vol. (High App.)
17:00	962.9077787	222.184669

Figure 4C-3 Warrant 3, Peak Hour

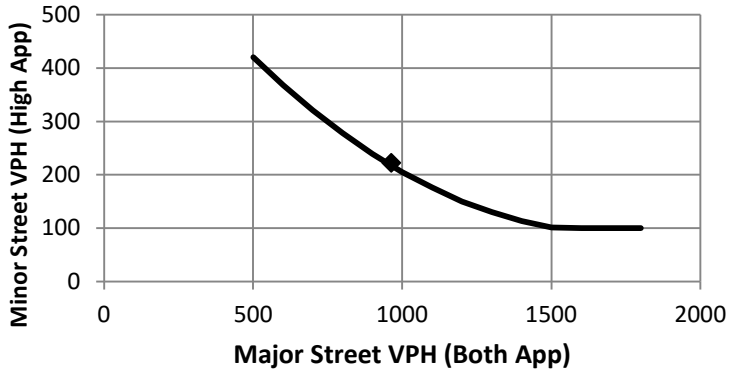

Warrant 4: Pedestrian Volume 100%

Warrant Evaluated? No **Warrant Satisfied? N/A** **Manually Set To:**

Criterion A: Four Hour

Hour (Start)	Pedestrian Volume	Major Road Vol.
		0
		0
		0
		0

Manually Set Major Rd Vol?

Avg. walk speed less than 3.5 ft/s?

Criterion A Satisfied?

Figure 4C-5 Warrant 4, Pedestrian Four-Hour Volume

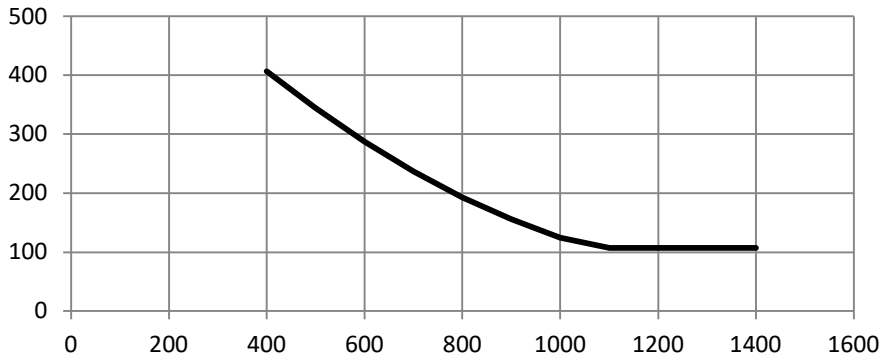

Criterion B: Peak Hour

Peak Hour	Pedestrian Vol.	Major Road Vol.
0:00	0	0

Criterion B Satisfied?

Figure 4C-7 Warrant 4, Pedestrian Peak Hour

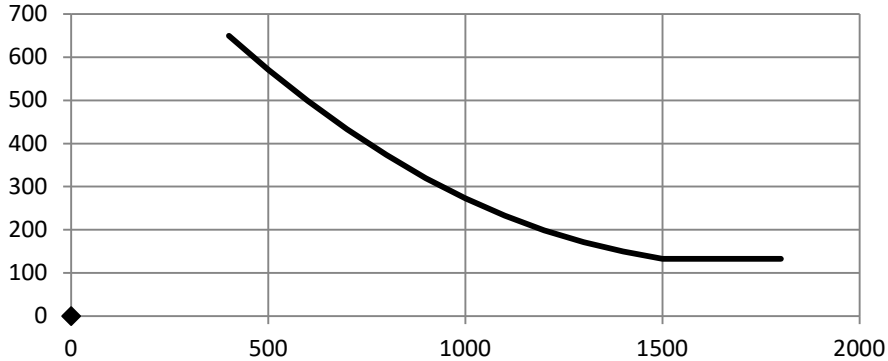

Wisconsin Department of Transportation Traffic Signal Warrant Summary Worksheet

100%

The Worksheet(s) attached are provided as an attachment to the Engineering Investigation Study for:

Intersection: WIS 60 and Eagle Drive
County: Washington
Village: Jackson

Major Street: WIS 60
Critical Approach Speed: 25 mph
Lanes: 1 lane

Minor Street: Eagle Drive
Critical Approach Speed: 25 mph
Lanes: 1 lane

% Right Turns Included
From North (SB) 100%
From East (WB) 0%
From South (NB) 100%
From West (EB) 100%

In built-up area of isolated community of < 10,000 population? No
Total number of approaches at intersection? 4 or more
If it is a "T" intersection, inflate minor threshold to 150%?
Manually set volume level? No

Analysis based on PROJECTED volume data.

Forecast Year	Within 5 Years of Construction?	Time (HH:MM)			
		From	AM / PM	To	AM / PM
2035	yes	6	AM	9	AM
2035	yes	3	PM	6	PM

Warrant Evaluation Summary	Warrant Met:
Warrant 1: Eight - Hour Vehicular Volume	**No**
Condition A: Minimum Vehicular Volume	No
Condition B: Interruption of Continuous Traffic	No
Condition C: Combination: 80% of A and B	No
Warrant 2: Four-Hour Volume	**Yes**
Warrant 3: Peak Hour Volume	**No**
Warrant 4: Pedestrian Volume	**N/A**
Criterion A: Four-Hour	
Criterion B: Peak-Hour	
Warrant 5: School Crossing	**N/A**
Warrant 6: Coordinated Signal System	**N/A**
Warrant 7: Crash Experience	**N/A**
Warrant 8: Roadway Network	**N/A**
Warrant 9: Intersection Near a Grade Crossing	**N/A**

Warrant Analysis Conducted By:

Name: Sandra Herbers
Agency: SRF Consulting
Date: 5/4/2020

Warrant 1: Eight - Hour Vehicular Volume 100%

Warrant Evaluated? Yes **Warrant Satisfied? No** **Manually Set To:**

Condition A : Min. Veh. Volume		
Volume Level	100%	80%
Major Rd. Req	500	400
Minor Rd. Req	150	120
Number of Hours	4	4

Satisfied? No

Condition B: Interruption of Continuous Traffic		
Volume Level	100%	80%
Major Rd. Req	750	600
Minor Rd. Req	75	60
Number of Hours	4	5

Satisfied? No

Condition C: Combination of A & B at 80%

Satisfied? No

6:00 AM Enter Start Time (Military Time) (HH:MM)

Time Period	**From**	**To**	**Major Road: Both App. (VPH)**	**Minor Road: High App. (VPH)**	**Total**
1	6:00	7:00	534	79	612.49
2	7:00	8:00	817	173	990
3	8:00	9:00	677	87	764.47
4	9:00	10:00	0	0	0
5	10:00	11:00	0	0	0
6	11:00	12:00	0	0	0
7	12:00	13:00	0	0	0
8	13:00	14:00	0	0	0
9	14:00	15:00	0	0	0
10	15:00	16:00	860	172	1031.95
11	16:00	17:00	935	158	1093.12
12	17:00	18:00	958	167	1125.09
13	18:00	19:00	0	0	0
14	19:00	20:00	0	0	0
15	20:00	21:00	0	0	0
16	21:00	22:00	0	0	0

Warrant 2: Four-Hour Volume 100%

Warrant Evaluated? Yes
Warrant Satisfied? Yes
Manually Set To:

Hour Start	17:00	16:00	15:00	7:00
Major Road Vol.	957.908	934.796	860.059	817
Minor Road Vol.	167.185	158.32	171.889	173

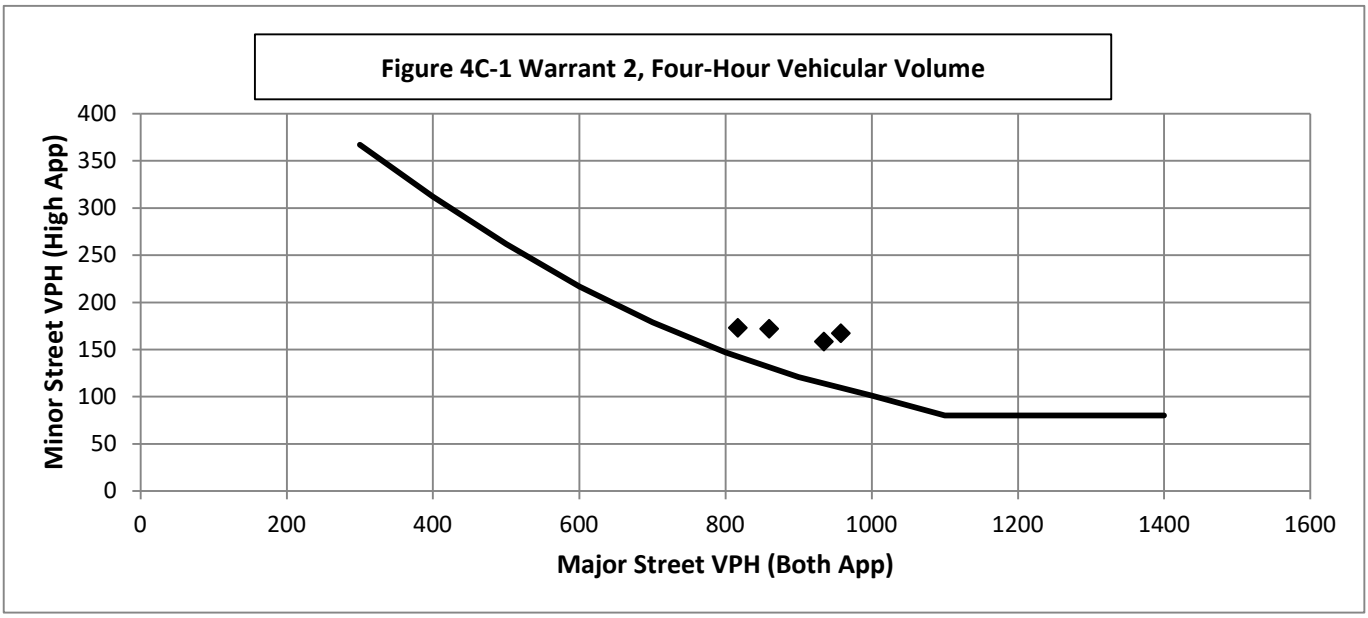

Warrant 3: Peak Hour Volume 100%

Warrant Evaluated? Yes **Warrant Satisfied? No** **Manually Set To:**

Condition justifying use of warrant:

Criteria		Met?
Delay on Minor Approach	4	Yes
Volume on Minor Approach	100	Yes
Total Entering Volume (veh/h)	800	

Manually Set Peak Hour? No

Peak Hour	Major Road Vol. (Both App.)	Minor Road Vol. (High App.)
17:00	957.9077787	167.184669

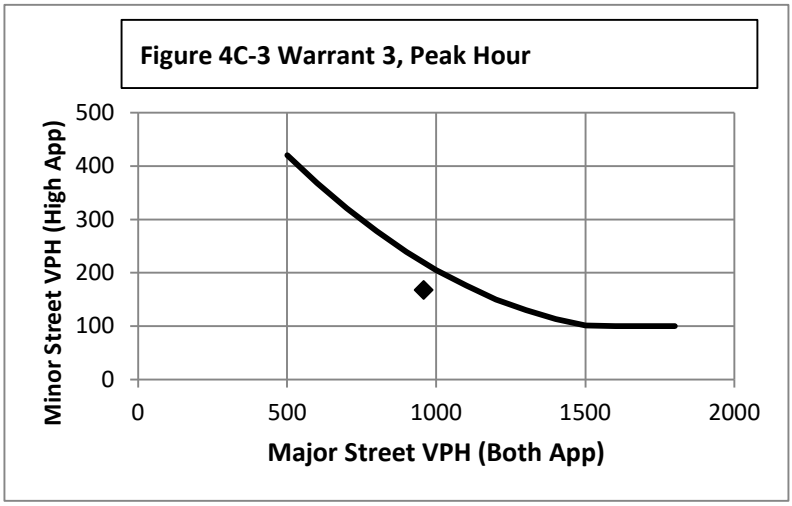

Warrant 4: Pedestrian Volume 100%

Warrant Evaluated? No **Warrant Satisfied? N/A** **Manually Set To:**

Criterion A: Four Hour

Hour (Start)	Pedestrian Volume	Major Road Vol.
		0
		0
		0
		0

Manually Set Major Rd Vol?

Avg. walk speed less than 3.5 ft/s?

Criterion A Satisfied?

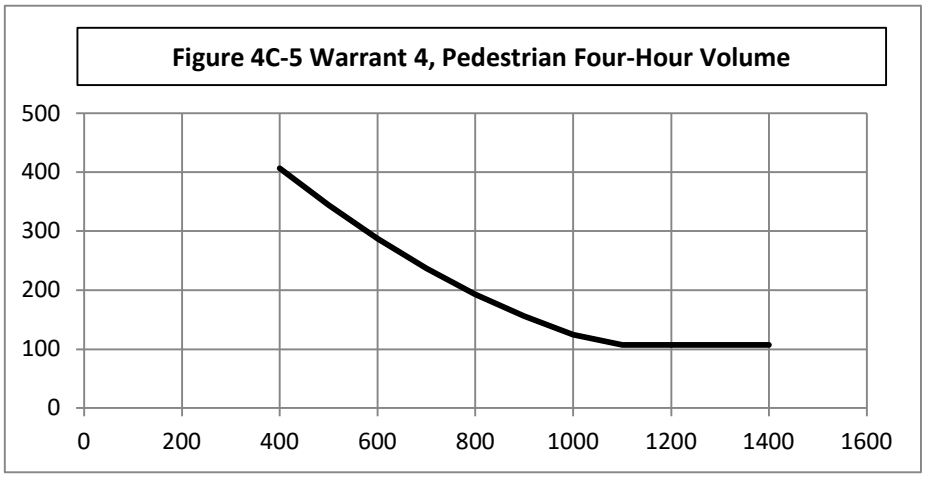

Criterion B: Peak Hour

Peak Hour	Pedestrian Vol.	Major Road Vol.
0:00	0	0

Criterion B Satisfied?

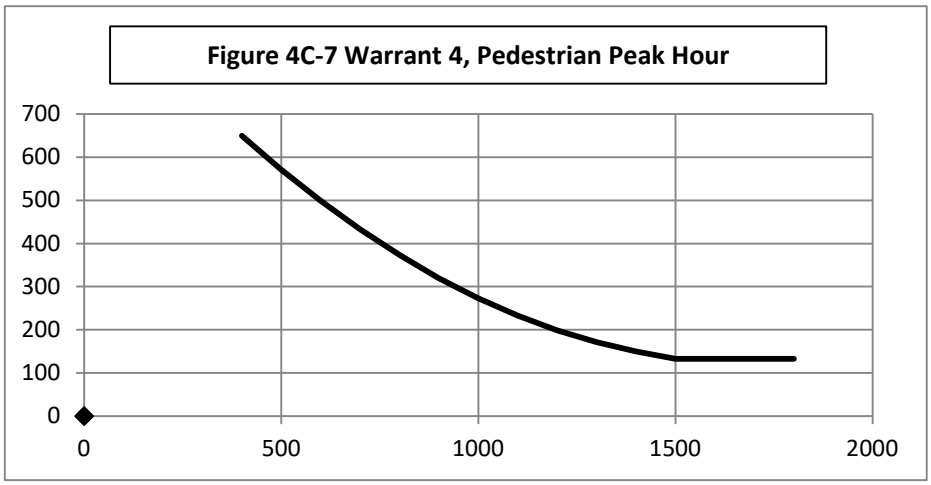

Wisconsin Department of Transportation Traffic Signal Warrant Summary Worksheet

100%

The Worksheet(s) attached are provided as an attachment to the Engineering Investigation Study for:

Intersection: WIS 60 and Ridgeway Drive
County: Washington
Village: Jackson

Major Street: WIS 60
Critical Approach Speed: 25 mph
Lanes: 1 lane

Minor Street: Ridgeway Drive
Critical Approach Speed: 25 mph
Lanes: 1 lane

% Right Turns Included
From North (SB) 100%
From East (WB) 0%
From South (NB) 100%
From West (EB) 100%

In built-up area of isolated community of < 10,000 population? No
Total number of approaches at intersection? 4 or more
If it is a "T" intersection, inflate minor threshold to 150%?
Manually set volume level? No

Analysis based on PROJECTED volume data.

Forecast Year	Within 5 Years of Construction?	Time (HH:MM)			
		From	AM / PM	To	AM / PM
2035	Yes	6	AM	9	AM
2035	Yes	3	PM	6	PM

Warrant Evaluation Summary	Warrant Met:
Warrant 1: Eight - Hour Vehicular Volume	**No**
Condition A: Minimum Vehicular Volume	No
Condition B: Interruption of Continuous Traffic	No
Condition C: Combination: 80% of A and B	No
Warrant 2: Four-Hour Volume	**Yes**
Warrant 3: Peak Hour Volume	**Yes**
Warrant 4: Pedestrian Volume	**N/A**
Criterion A: Four-Hour	
Criterion B: Peak-Hour	
Warrant 5: School Crossing	**N/A**
Warrant 6: Coordinated Signal System	**N/A**
Warrant 7: Crash Experience	**N/A**
Warrant 8: Roadway Network	**N/A**
Warrant 9: Intersection Near a Grade Crossing	**N/A**

Warrant Analysis Conducted By:

Name: Sandra Herbers
Agency: SRF Consulting
Date: 5/4/2020

Warrant 1: Eight - Hour Vehicular Volume 100%

Warrant Evaluated? Yes **Warrant Satisfied? No** **Manually Set To:**

Condition A : Min. Veh. Volume		
Volume Level	100%	80%
Major Rd. Req	500	400
Minor Rd. Req	150	120
Number of Hours	4	5

Satisfied? No

Condition B: Interruption of Continuous Traffic		
Volume Level	100%	80%
Major Rd. Req	750	600
Minor Rd. Req	75	60
Number of Hours	5	6

Satisfied? No

Condition C: Combination of A & B at 80%

Satisfied? No

6:00 AM Enter Start Time (Military Time) (HH:MM)

Time Period	**From**	**To**	**Major Road: Both App. (VPH)**	**Minor Road: High App. (VPH)**	**Total**
1	6:00	7:00	618	77	694.643
2	7:00	8:00	918	135	1053
3	8:00	9:00	793	151	943.846
4	9:00	10:00	0	0	0
5	10:00	11:00	0	0	0
6	11:00	12:00	0	0	0
7	12:00	13:00	0	0	0
8	13:00	14:00	0	0	0
9	14:00	15:00	0	0	0
10	15:00	16:00	1040	178	1218.38
11	16:00	17:00	1145	185	1329.48
12	17:00	18:00	1163	205	1367.59
13	18:00	19:00	0	0	0
14	19:00	20:00	0	0	0
15	20:00	21:00	0	0	0
16	21:00	22:00	0	0	0

Warrant 2: Four-Hour Volume 100%

Warrant Evaluated? Yes
Warrant Satisfied? Yes
Manually Set To:

Hour Start	17:00	16:00	15:00	7:00
Major Road Vol.	1162.59	1144.93	1040.49	918
Minor Road Vol.	205	184.543	177.897	135

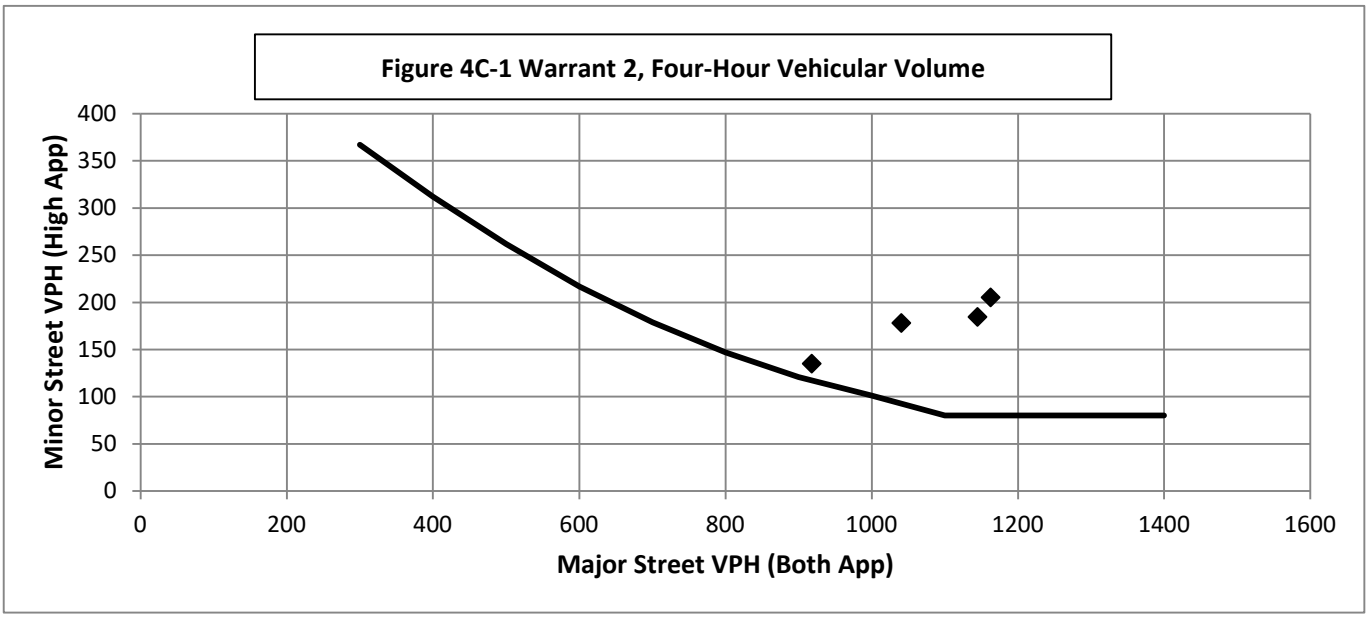

Warrant 3: Peak Hour Volume 100%

Warrant Evaluated? Yes **Warrant Satisfied? Yes** **Manually Set To:**

Condition justifying use of warrant:

Criteria		Met?
Delay on Minor Approach	4	Yes
Volume on Minor Approach	100	Yes
Total Entering Volume (veh/h)	800	

Manually Set Peak Hour? No

Peak Hour	Major Road Vol. (Both App.)	Minor Road Vol. (High App.)
17:00	1162.585279	205

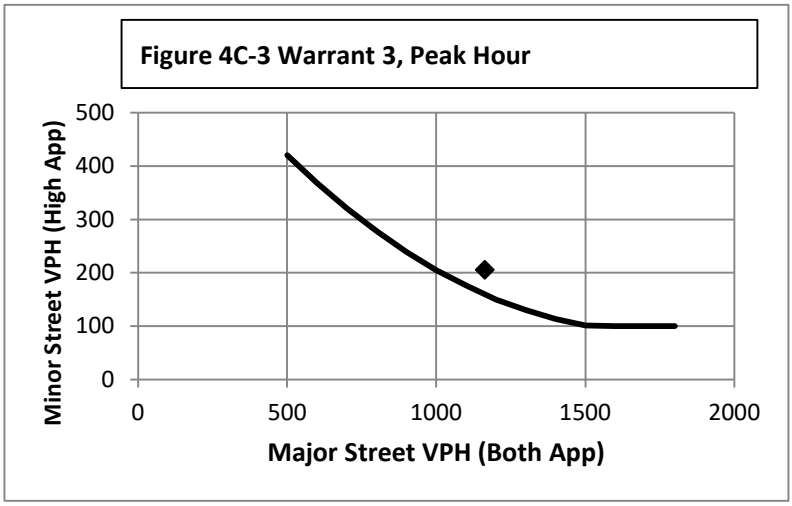

Warrant 4: Pedestrian Volume 100%

Warrant Evaluated? No **Warrant Satisfied? N/A** **Manually Set To:**

Criterion A: Four Hour

Hour (Start)	Pedestrian Volume	Major Road Vol.
		0
		0
		0
		0

Manually Set Major Rd Vol?

Avg. walk speed less than 3.5 ft/s?

Criterion A Satisfied?

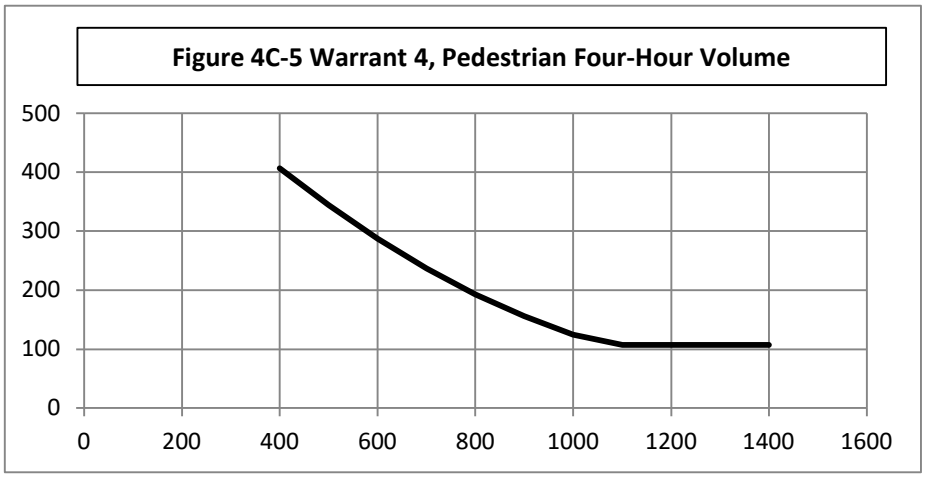

Criterion B: Peak Hour

Peak Hour	Pedestrian Vol.	Major Road Vol.
0:00	0	0

Criterion B Satisfied?

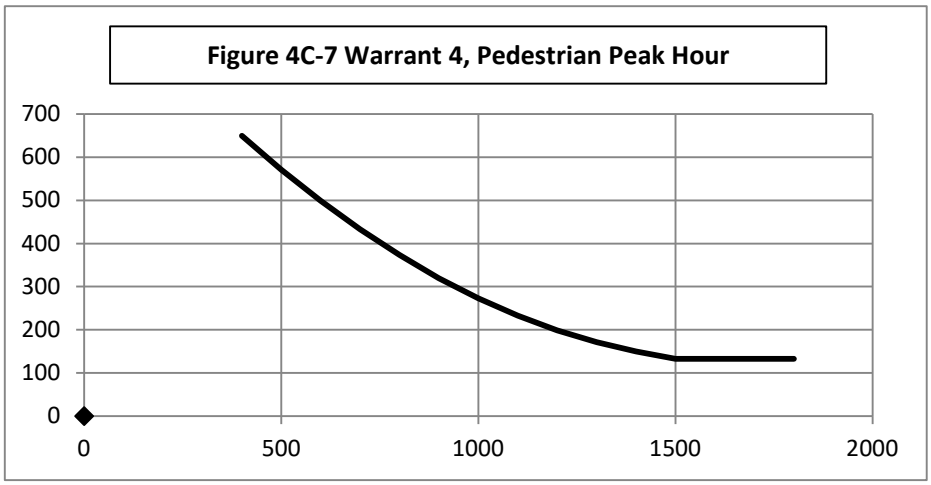

Wisconsin Department of Transportation Traffic Signal Warrant Summary Worksheet

100%

The Worksheet(s) attached are provided as an attachment to the Engineering Investigation Study for:

Intersection: WIS 60 and Ridgeway Drive
County: Washington
Village: Jackson

Major Street: WIS 60
Critical Approach Speed: 25 mph
Lanes: 1 lane

Minor Street: Ridgeway Drive
Critical Approach Speed: 25 mph
Lanes: 1 lane

% Right Turns Included
From North (SB) 100%
From East (WB) 0%
From South (NB) 100%
From West (EB) 100%

In built-up area of isolated community of < 10,000 population? No
Total number of approaches at intersection? 4 or more
If it is a "T" intersection, inflate minor threshold to 150%?
Manually set volume level? No

Analysis based on PROJECTED volume data.

Forecast Year	Within 5 Years of Construction?	Time (HH:MM)			
		From	AM / PM	To	AM / PM
2035	Yes	6	AM	9	AM
2035	Yes	3	PM	6	PM

Warrant Evaluation Summary	Warrant Met:
Warrant 1: Eight - Hour Vehicular Volume	**No**
Condition A: Minimum Vehicular Volume	No
Condition B: Interruption of Continuous Traffic	No
Condition C: Combination: 80% of A and B	No
Warrant 2: Four-Hour Volume	**Yes**
Warrant 3: Peak Hour Volume	**Yes**
Warrant 4: Pedestrian Volume	**N/A**
Criterion A: Four-Hour	
Criterion B: Peak-Hour	
Warrant 5: School Crossing	**N/A**
Warrant 6: Coordinated Signal System	**N/A**
Warrant 7: Crash Experience	**N/A**
Warrant 8: Roadway Network	**N/A**
Warrant 9: Intersection Near a Grade Crossing	**N/A**

Warrant Analysis Conducted By:
Name: Sandra Herbers
Agency: SRF Consulting
Date: 5/4/2020

Warrant 1: Eight - Hour Vehicular Volume 100%

Warrant Evaluated? Yes **Warrant Satisfied? No** **Manually Set To:**

Condition A : Min. Veh. Volume		
Volume Level	100%	80%
Major Rd. Req	500	400
Minor Rd. Req	150	120
Number of Hours	4	5

Satisfied? No

Condition B: Interruption of Continuous Traffic		
Volume Level	100%	80%
Major Rd. Req	750	600
Minor Rd. Req	75	60
Number of Hours	5	6

Satisfied? No

Condition C: Combination of A & B at 80%

Satisfied? No

6:00 AM Enter Start Time (Military Time) (HH:MM)

Time Period	From	To	Major Road: Both App. (VPH)	Minor Road: High App. (VPH)	Total
1	6:00	7:00	618	77	694.643
2	7:00	8:00	918	135	1053
3	8:00	9:00	793	151	943.846
4	9:00	10:00	0	0	0
5	10:00	11:00	0	0	0
6	11:00	12:00	0	0	0
7	12:00	13:00	0	0	0
8	13:00	14:00	0	0	0
9	14:00	15:00	0	0	0
10	15:00	16:00	1036	183	1218.38
11	16:00	17:00	1140	189	1329.48
12	17:00	18:00	1158	210	1367.59
13	18:00	19:00	0	0	0
14	19:00	20:00	0	0	0
15	20:00	21:00	0	0	0
16	21:00	22:00	0	0	0

Warrant 2: Four-Hour Volume 100%

Warrant Evaluated? Yes
Warrant Satisfied? Yes
Manually Set To:

Hour Start	17:00	16:00	15:00	7:00
Major Road Vol.	1157.59	1140.17	1035.84	918
Minor Road Vol.	210	189.305	182.54	135

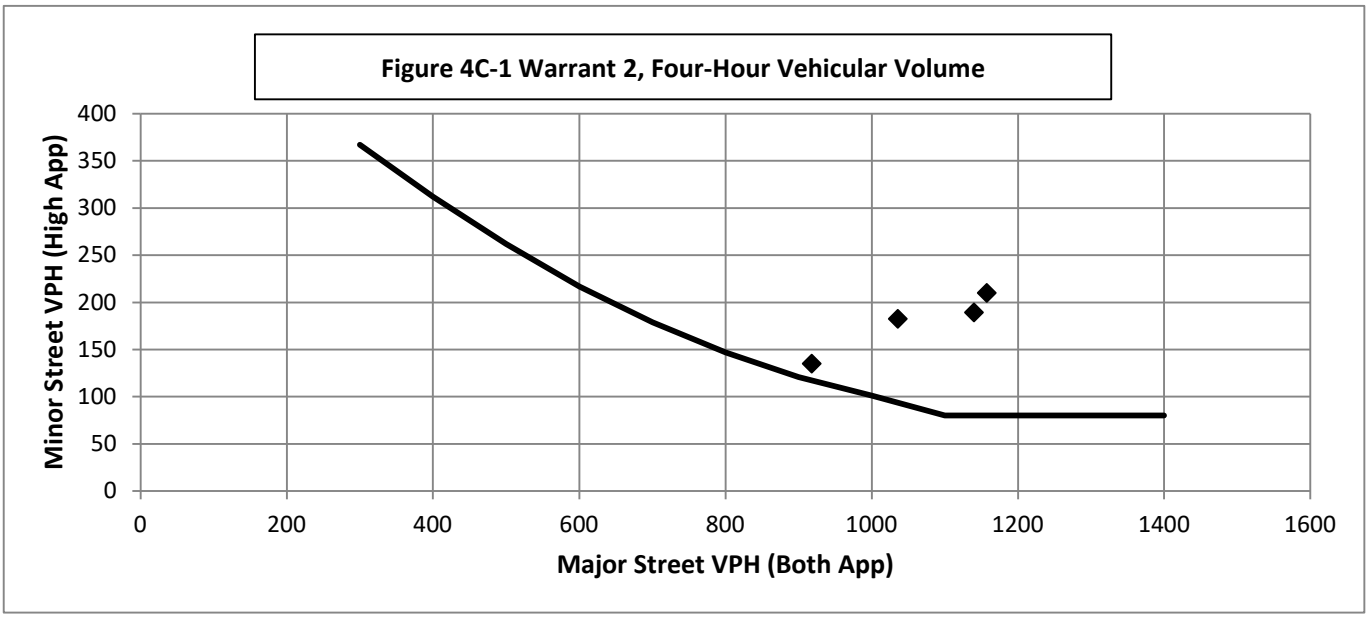

Warrant 3: Peak Hour Volume 100%

Warrant Evaluated? Yes **Warrant Satisfied? Yes** **Manually Set To:**

Condition justifying use of warrant:

Criteria		Met?
Delay on Minor Approach	4	Yes
Volume on Minor Approach	100	Yes
Total Entering Volume (veh/h)	800	

Manually Set Peak Hour? No

Peak Hour	Major Road Vol. (Both App.)	Minor Road Vol. (High App.)
17:00	1157.585279	210

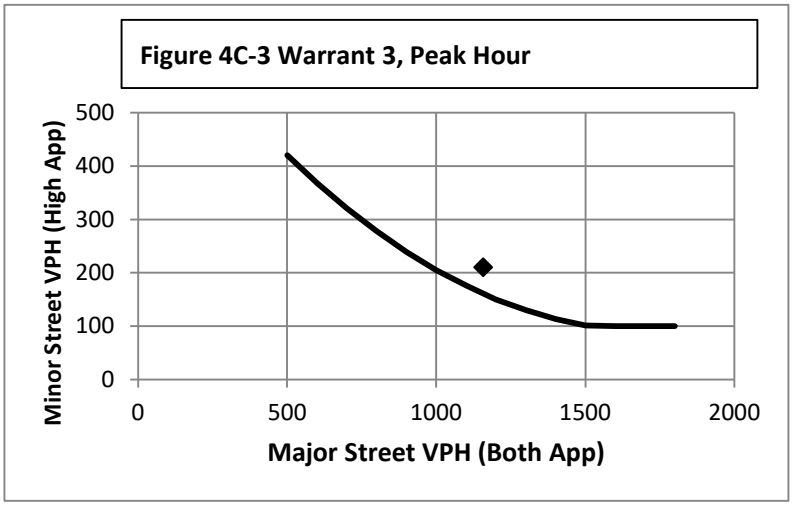

Warrant 4: Pedestrian Volume 100%

Warrant Evaluated? No **Warrant Satisfied? N/A** **Manually Set To:**

Criterion A: Four Hour

Hour (Start)	Pedestrian Volume	Major Road Vol.
		0
		0
		0
		0

Manually Set Major Rd Vol?

Avg. walk speed less than 3.5 ft/s?

Criterion A Satisfied?

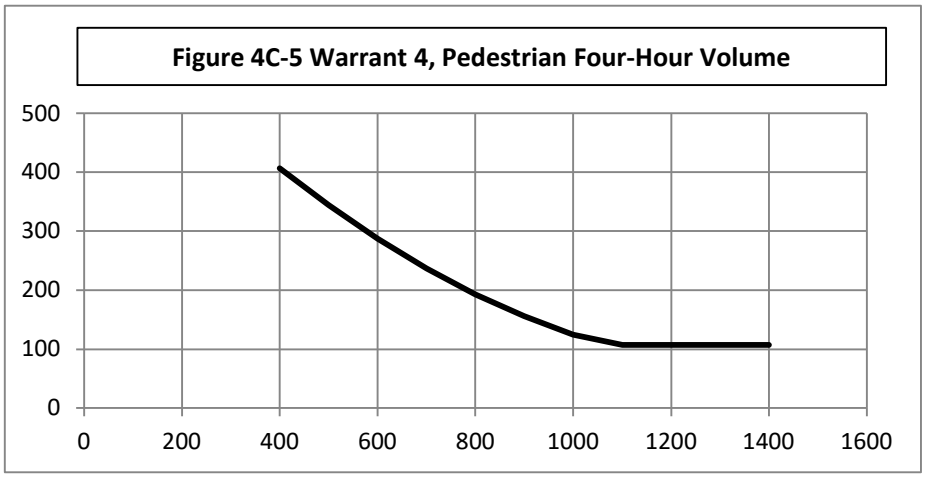

Criterion B: Peak Hour

Peak Hour	Pedestrian Vol.	Major Road Vol.
0:00	0	0

Criterion B Satisfied?

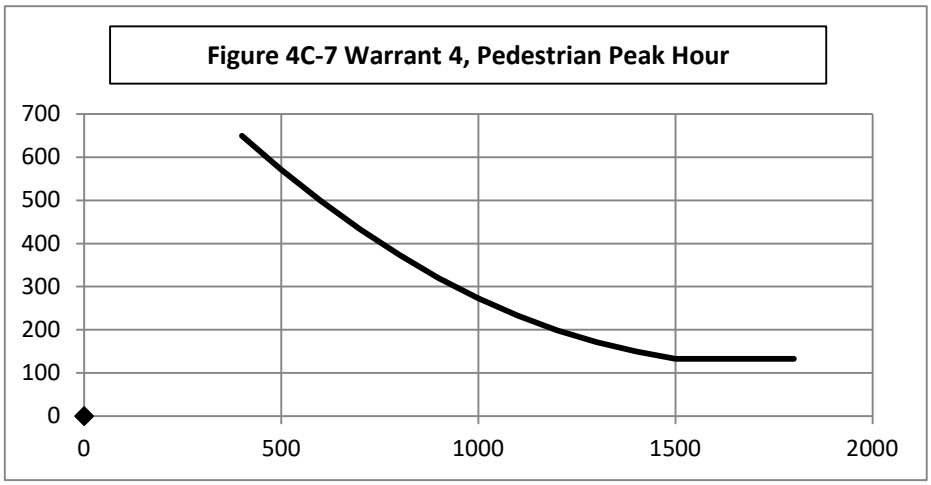

Appendix J: Intersection Control Evaluation (ICE)

Phase I Ice: Eagle Drive
Phase I Ice: Ridgeway Drive

To: DOT ICE Review
From: Sandra Herbers, SRF Consulting
Date: 5/4/2020
RE: LOG #248108
Traffic Impact Analysis (TIA)
WIS 60 and Eagle Drive
Village of Jackson, Washington County
SE Region

Project Description:

A TIA is being completed for the Village of Jackson TIF District. In reviewing operations analysis at WIS 60 and Eagle Drive, it was determined that the minor approaches currently suffer major delays (LOS F) under existing two-way stop control conditions. This ICE analysis is being conducted to determine the best intersection control to potentially improve operations, as geometric changes do not appear to significantly improve delays.

Description of Alternatives:

The following alternatives, found on the Phase I: Ice Brainstorming Guild are to be considered at the intersection of WIS 60 and Eagle Drive:

1) All Way Stop Control
2) Traffic Signal
3) Roundabout
4) Right In / Right Out
5) Right-In/Right-Out/Left-In

Safety Considerations:

Observed Crash History Years: 5

Crash Type	Fatal	Injury A	Injury B	Injury C	KABC	PDO	Total
Angle			2	2			4
Rear End						3	3
SSS						1	1
Total							8

(add more rows as needed)

Crash Trends:

Angle crashes from motorists trying to turn left onto mainline. Rear end crashes on minor approaches.

Contributing Factors:

TWSC can allow for opposing movements to occur at the same time as well as people to "creep" when trying to determine if they should enter the intersection. Further review and investigation should be completed during Phase II to determine more completely the cause of the crash trends at this intersection.

Operational Considerations:

The following shows operations deficiencies for AM and PM traffic conditions at WIS 60 and Eagle Drive:

Analysis Period	By Approach	Eastbound			Westbound			Northbound			Southbound		
		EBL	EBT	EBR	WBL	WBT	WBR	NBL	NBT	NBR	SBL	SBT	SBR
AM	Lane Configuration	1	1>	0	1	1	1	0	<1>	0	1	1>	0
	Volume	70	345	35	15	235	85	25	20	25	80	15	65
	Delay (s)	8.4	-	-	8.3	-	-	-	27.0	-	40.2	13.2	-
	LOS	A	-	-	A	-	-	-	D	-	E	B	-
PM	Lane Configuration	1	1>	0	1	1	1	0	<1>	0	1	1>	0
	Volume	55	275	100	35	310	80	50	40	20	55	35	55
	Delay (s)	8.5	-	-	8.4	-	-	-	67.6	-	45.7	19.6	-
	LOS	A	-	-	A	-	-	-	F	-	E	C	-

Under existing traffic volumes, minor approaches currently suffer delays with queues beginning to reach back to adjacent retail driveways.

Warrants:

Evaluating ***AWSC warrants***, traffic volumes are not significant enough to warrant a change however number of crashes mitigated does.

Evaluating ***traffic signal warrants***, background traffic volumes are not significant enough to warrant a change and Village of Jackson is not located within an isolated community. Signal meets warrants under isolated community consideration. With the addition of TIA development traffic, warrants are met under the horizon year scenario.

Other Alternatives:

Roundabout alternative would mitigate crashes and delays.

Other Considerations:

Queues on Northbound approach reach the Piggly Wiggly Driveway
Cost of implementation should be reviewed to help determine best alternatives in Phase II

Feasibility of Alternatives:

The following alternatives were removed from consideration using the Brainstorming guide for various reasons, also listed below:

1) All Way Stop Control – Significant delays caused on Mainline
2) Right In / Right Out – Appropriate alternate routes are not available to detour traffic back to WIS 60 from local businesses south of WIS 60

The following describes the feasibility of the remaining alternatives considered, as determined by the ICE Brainstorming Guide:

1) Traffic Signal - Performance Measures and ROW Impacts are acceptable under existing conditions
2) Roundabout – Performance Measures and ROW impacts are acceptable for a single lane roundabout under existing conditions

Conclusion:

Phase II Ice is recommended to be completed with a larger volume set to review and consider implementation of either a traffic signal or roundabout.

Attachments:

Attachment A: Phase I: ICE Brainstorming Guide
Attachment B: Project Location Map
Attachment C: Intersection Crash Diagram

Phase I: ICE Brainstorming Guide

Date: 5/4/2020
Project ID: LOG #248108
Control: Stop Control
Major Road AADT: 8700
Minor Road AADT: 1500

Intersection: WIS 60 and Eagle Drive
Reason for ICE: Analysis of the interesection for the Village of Jackson TIF District TIA found operational deficiencies are present on Eagle Drive under existing conditions. Geometric improvements alone will not improve operations

List of Alternatives:

v02

Alt. #	Control Type	Is Alt. Viable?	Meets Purpose & Need?	Performance Measures Acceptable?	ROW Impacts Acceptable?	Meets Warrants? (If Applicable)	Manual Override (Optional)	Explanation/Comments
1	Minor Road Stop Control	No	No	No	Yes	N/A		Existing conditons
2	All-Way Stop Control	No	Yes	No	Yes	No		Operations severely degrade along mainline
3	Traffic Signal	No	Yes	Yes	Yes	No		
4	Roundabout	Yes	Yes	Yes	Yes	N/A		
5	Right-In/Right-Out	No	No					
6	Right-In/Right-Out/Left-In	No	No					
7	Offset T	No	No					
8	J-turn	No	No					
9	Median U-Turn	No	No					
10	Continuous Green-T	No	No					
11	Quadrant/Jughandle	No	No					
12	Diamond	No	No					
13	Cloverleaf/ Partial Cloverleaf	No	No					
14	Diverging Diamond	No	No					
15	Single Point	No	No					
16	Echelon	No	No					
17	[Add more as needed]	-						

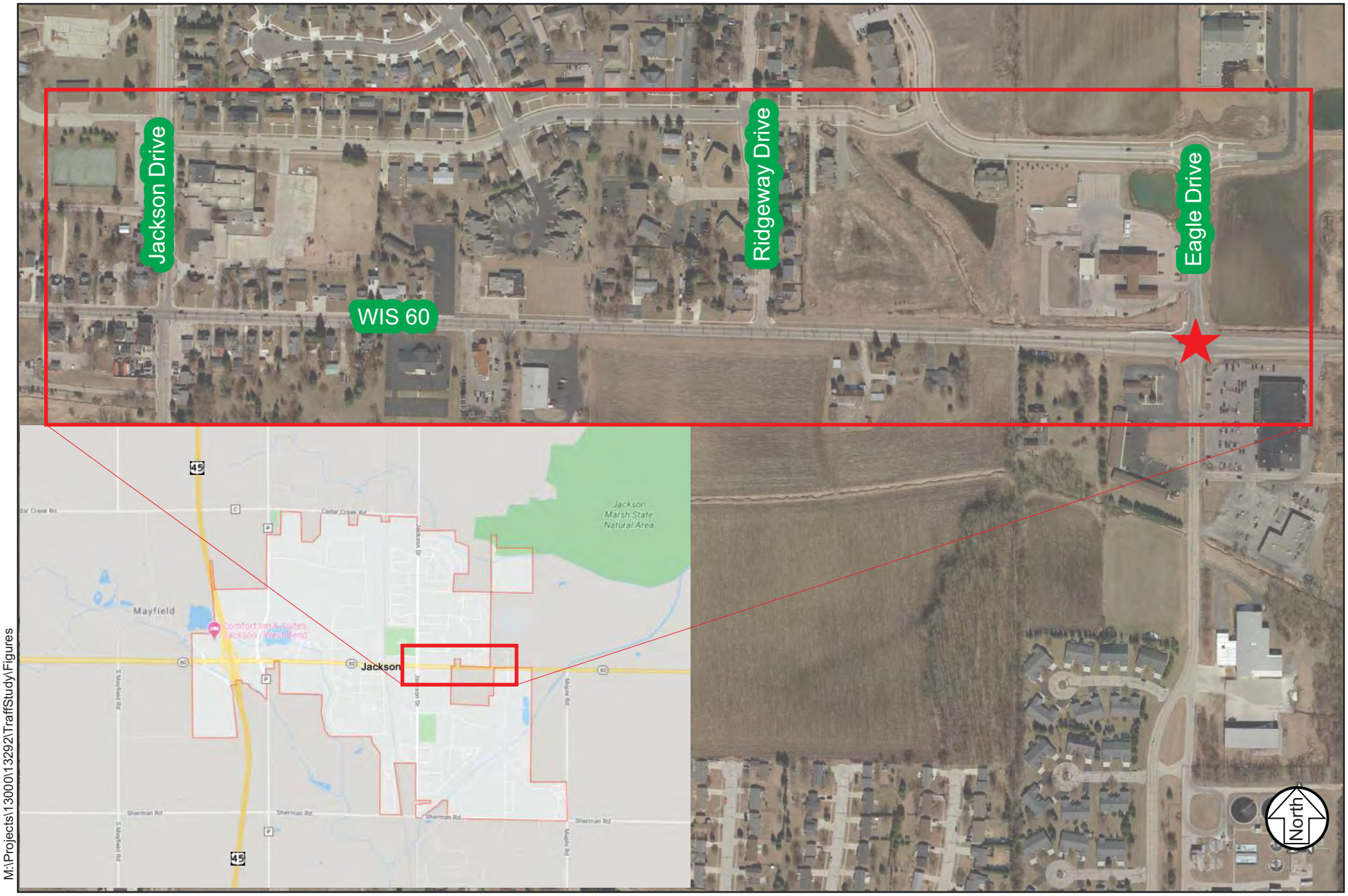

M:\Projects\13000\13292\TraffStudy\Figures

SRF Consulting Group, Inc.

Project Location

Jackson TIF District TIA - Eagle Drive ICE

Village of Jackson, WI

Attachment B

13292
May 2020

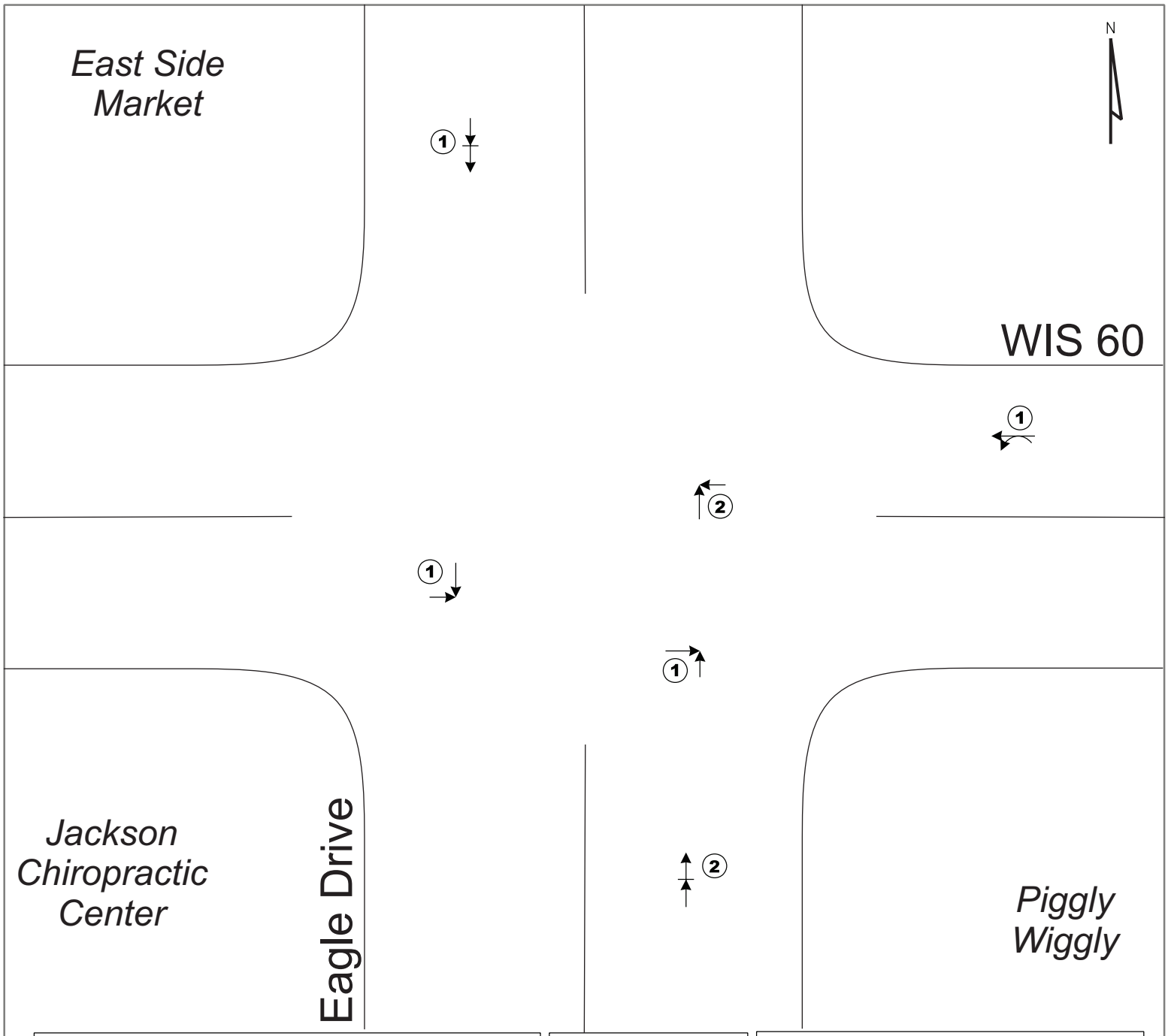

DOCUMENTATION CONVENTION

(#) = CRASH FREQUENCY (2015 - 2019)

CRASH RATE

.49 Crashes
Per One Million Entering Vehicles

Entering Vehicles: 8,950/day

CRASH FREQUENCY/SEVERITY

8 Crashes

- 0 Fatal Crash (K)
- 0 Incapacitating (A-level)
- 2 Non-Incapacitating (B-level)
- 2 Possible Injury (C-level)
- 4 Property Damage Only

LEGEND

Moving Vehicle	Stop/Yield Sign	Angle (Right Angle)	Head-On
Backing Vehicle	Tree	Angle (Left Turn)	Rear-End
Pedestrian	Utility Pole	Angle (Right Turn)	Out of Control
Bicyclist	Fixed Object	Sideswipe-Same	Overtake
Parked Vehicle	Non-Fixed Object	Sideswipe-Opposite	Overturn

ATTACHMENT C
COLLISION DIAGRAM
WIS 60 & EAGLE DRIVE
VILLAGE OF JACKSON, WISCONSIN

Years: 2015- 2019

To: DOT ICE Review
From: Sandra Herbers, SRF Consulting
Date: 5/4/2020
RE: LOG #248108
Traffic Impact Analysis (TIA)
WIS 60 and Ridgeway Drive
Village of Jackson, Washington County
SE Region

Project Description:

A TIA is being completed for the Village of Jackson TIF District. In reviewing operations analysis at WIS 60 and Ridgeway Drive, it was determined that the minor approaches will begin to suffer delays (LOS D) in year 2030. This ICE analysis is being conducted to determine the best intersection control to potentially improve operations, as geometric changes do not appear to significantly improve delays.

Description of Alternatives:

The following alternatives, found on the Phase I: Ice Brainstorming Guild are to be considered at the intersection of WIS 60 and Ridgeway Drive:

1) All Way Stop Control
2) Traffic Signal
3) Roundabout
4) Right In / Right Out
5) Right-In/Right-Out/Left-In

Safety Considerations:

Observed Crash History Years: 5

Crash Type	Fatal	Injury A	Injury B	Injury C	KABC	PDO	Total
Rear End			2	1		7	10
RTR						1	1
Total			2	1		8	11

The above Crashes are from years 2015-2019 with existing intersection geometry (T-Intersection). This Phase I Ice is for a future condition when the intersection is expected to have new geometry (4-leged intersection) and therefore the crashes present here may no longer be applicable.

Crash Trends:

Rear end crashes along mainline as motorists slow down to make turns or slow down to avoid left turning motorists.

Contributing Factors:

A likely contributing factor is the lack of turn lanes on the mainline

Operational Considerations:

The following shows operations deficiencies for AM and PM traffic conditions at WIS 60 and Ridgeway Drive for the projected traffic in year 2030 with development traffic:

Analysis Period	By Approach	Eastbound			Westbound			Northbound			Southbound		
		EBL	EBT	EBR	WBL	WBT	WBR	NBL	NBT	NBR	SBL	SBT	SBR
AM	Lane Configuration	0	<1>	0	0	<1>	0	0	<1>	0	0	<1>	0
	Volume	10	385	30	5	315	15	45	0	5	70	0	60
	Delay (s)	8.1	0.0	-	8.5	0.0	-	-	25.8	-	-	22.7	-
	LOS	A	A	-	A	A	-	-	D	-	-	C	-
PM	Lane Configuration	0	<1>	0	0	<1>	0	0	<1>	0	0	<1>	0
	Volume	50	415	40	0	375	45	35	0	5	20	0	10
	Delay (s)	8.5	0.0	-	0.0	-	-	-	28.4	-	-	22.4	-
	LOS	A	A	-	A	-	-	-	D	-	-	C	-

Under year 2030 traffic volumes, northbound movements suffer delays. Under year 2035 with with development traffic, conditions for both minor approaches are expected to worsen as seen in the table below.

Analysis Period	By Approach	Eastbound			Westbound			Northbound			Southbound		
		EBL	EBT	EBR	WBL	WBT	WBR	NBL	NBT	NBR	SBL	SBT	SBR
AM	Lane Configuration	0	<1>	0	0	<1>	0	0	<1>	0	0	<1>	0
	Volume	10	435	140	40	340	15	110	0	30	75	0	60
	Delay (s)	8.2	0.0	-	9.3	0.0	-	-	126.6	-	-	50.4	-
	LOS	A	A	-	A	A	-	-	F	-	-	F	-
PM	Lane Configuration	0	<1>	0	0	<1>	0	0	<1>	0	0	<1>	0
	Volume	50	455	190	40	425	45	185	0	60	20	0	10
	Delay (s)	8.7	0.0	-	9.4	0.0	-	-	589.3	-	-	44.4	-
	LOS	A	A	-	A	A	-	-	F	-	-	E	-

Warrants:

Evaluating ***AWSC warrants***, traffic volumes are not significant enough to warrant a change.

Evaluating ***traffic signal warrants***, traffic volumes do not warrant a change until horizon year 2035 with development traffic.

Other Alternatives:

Roundabout alternative would mitigate crashes and delays.

Other Considerations:

Addition of a south leg to the intersection of WIS 60 and Ridgeway Drive increases probability of angle crashes to occur at this intersection

Cost of implementation should be reviewed to help determine best alternatives in Phase II

Feasibility of Alternatives:

The following alternatives were removed from consideration using the Brainstorming guide for various reasons, also listed below:

1) All Way Stop Control – Significant delays caused on Mainline
2) Right In / Right Out – Appropriate alternate routes are not available to detour traffic back to WIS 60

The following describes the feasibility of the remaining alternatives considered, as determined by the ICE Brainstorming Guide:

1) Traffic Signal - Performance Measures and ROW Impacts are acceptable under existing conditions
2) Roundabout – Performance Measures and ROW impacts are acceptable for a single lane roundabout under existing conditions

Conclusion:

Phase II Ice is recommended to be completed with a larger volume set to review and consider implementation of either a traffic signal or roundabout.

Attachments:

Attachment A: Phase I: ICE Brainstorming Guide

Attachment B: Project Location Map

*Attachment C: Intersection Crash Diagram is not provided as intersection geometry under this analysis does not correspond with the crash data available.

Phase I: ICE Brainstorming Guide

Date: 5/4/2020
Project ID: LOG #248108
Control: Stop Control
Major Road AADT: 8700
Minor Road AADT: 800

Intersection: WIS 60 and Ridgeway Drive
Reason for ICE: Analysis of the interesection for the Village of Jackson TIF District TIA found operational deficiencies are present on Ridgeway Drive under Base Year Build Traffic

List of Alternatives:

v02

Alt. #	Control Type	Is Alt. Viable?	Meets Purpose & Need?	Performance Measures Acceptable?	ROW Impacts Acceptable?	Meets Warrants? (If Applicable)	Manual Override (Optional)	Explanation/Comments
1	Minor Road Stop Control	No	No	No	Yes	N/A		Existing conditons
2	All-Way Stop Control	No	Yes	No	Yes	No		Operations severely degrade along mainline
3	Traffic Signal	No	Yes	Yes	Yes	No		
4	Roundabout	Yes	Yes	Yes	Yes	N/A		
5	Right-In/Right-Out	No	No					
6	Right-In/Right-Out/Left-In	No	No					
7	Offset T	No	No					
8	J-turn	No	No					
9	Median U-Turn	No	No					
10	Continuous Green-T	No	No					
11	Quadrant/Jughandle	No	No					
12	Diamond	No	No					
13	Cloverleaf/ Partial Cloverleaf	No	No					
14	Diverging Diamond	No	No					
15	Single Point	No	No					
16	Echelon	No	No					
17	[Add more as needed]	-						

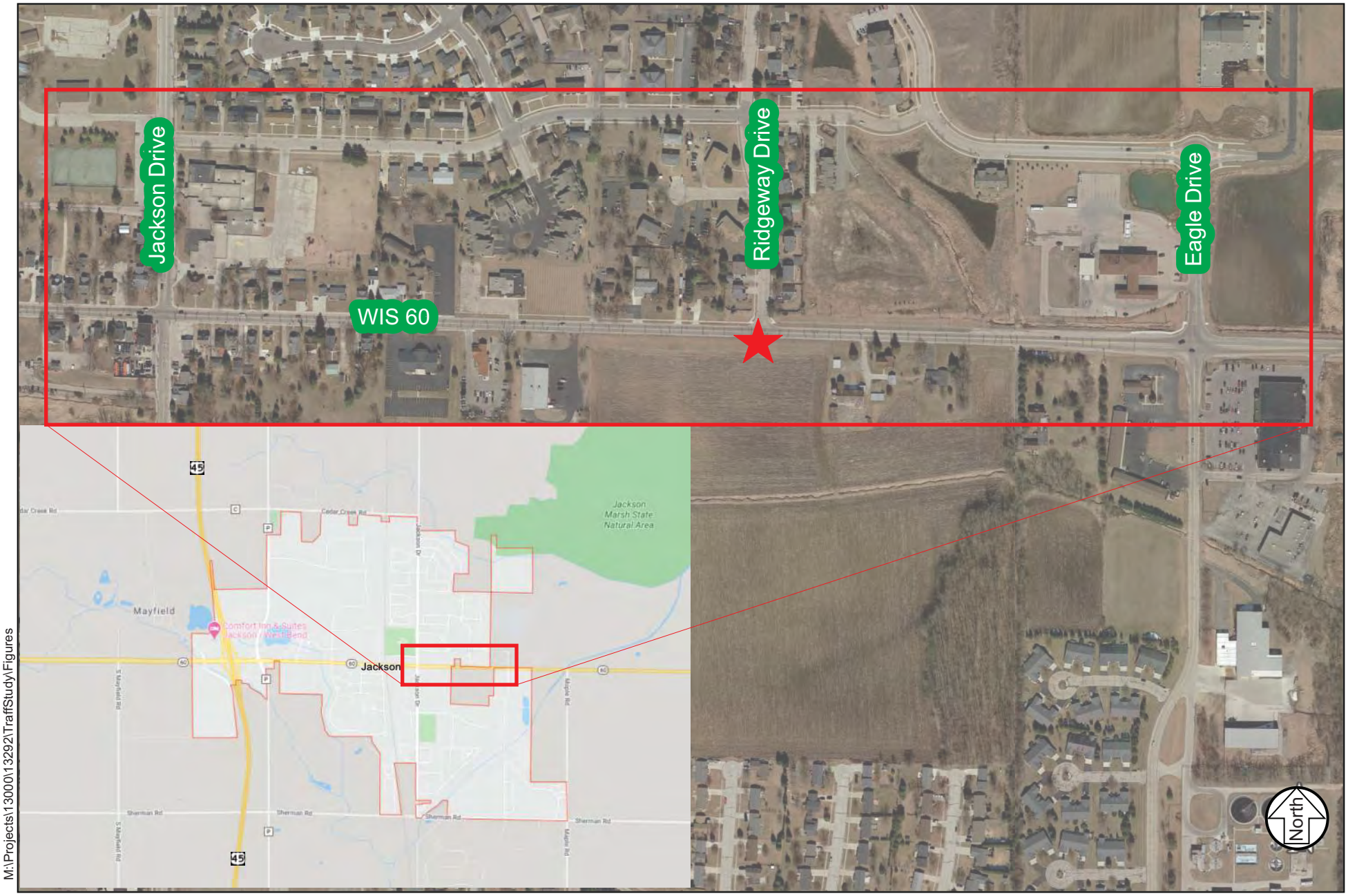

M:\Projects\13000\13292\TraffStudy\Figures

SRF Consulting Group, Inc.

Project Location

Jackson TIF District TIA - Ridgeway Drive ICE

Village of Jackson, WI

Attachment B

13292
May 2020

Public Works Report
February 23, 2021

Treatment Plant - Designed Capacity – 1.67 million gallons per day
Peak Flow Capacity – 6.0 million gallons per day

Year 2019

January	Avg. Flow 1.270 MGD	Min. Flow 900,000 g.p.d.	Max. 2.660 MGD
February	Avg. Flow 1.229 MGD	Min. Flow 850,000 g.p.d.	Max. 1.980 MGD
March	Avg. Flow 1.379 MGD	Min. Flow 910,000 g.p.d.	Max. 2.790 MGD
April	Avg. Flow 1.483 MGD	Min. Flow 1.020 MGD	Max. 2.660 MGD
May	Avg. Flow 1.542 MGD	Min. Flow 1.320 MGD	Max 1.960 MGD
June	Avg. Flow 2.144 MGD	Min. Flow 1.300 MGD	Max. 2.700 MGD
July	Avg. Flow 1.251 MGD	Min. Flow 970,000 g.p.d.	Max. 1.850 MGD
August	Avg. Flow 1.098 MGD	Min. Flow 830,000 g.p.d.	Max. 1.470 MGD
September	Avg. Flow 1.253 MGD	Min. Flow 800,000 g.p.d.	Max. 2.050 MGD
October	Avg. Flow 1.699 MGD	Min. Flow 1.060 MGD	Max. 4.010 MGD
November	Avg. Flow 1.499 MGD	Min. Flow 1.14 MGD	Max. 2.26 MGD
December	Avg. Flow 1.372 MGD	Min. Flow 910,000 g.p.d.	Max. 2.14 MGD

Year 2020

January	Avg. Flow 1.280 MGD	Min. Flow 1.055 MGD	Max. 1.720 MGD
February	Avg. Flow 1.221 MGD	Min. Flow 1.000 MGD	Max. 1.630 MGD
March	Avg. Flow 1.581 MGD	Min. Flow 1.010 MGD	Max. 2.290 MGD
April	Avg. Flow 1.283 MGD	Min. Flow 940,000 g.p.d.	Max. 2.210 MGD
May	Avg. Flow 1.607 MGD	Min. Flow 1.010 MGD	Max. 4.090 MGD
June	Avg. Flow 1.178 MGD	Min. Flow 980,000 g.p.d.	Max. 1.510 MGD
July	Avg. Flow 1.269 MGD	Min. Flow 800,000 g.p.d.	Max. 2.370 MGD
August	Avg. Flow 1.042 MGD	Min. Flow 760,000 g.p.d.	Max. 1.510 MGD
September	Avg. Flow 1.148 MGD	Min. Flow 810,000 g.p.d.	Max. 1.850 MGD
October	Avg. Flow 1.172 MGD	Min. Flow 870,000 g.p.d.	Max. 2.210 MGD
November	Avg. Flow 1.122 MGD	Min. Flow 860,000 g.p.d.	Max. 1.770 MGD
December	Avg. Flow 1.164 MGD	Min. Flow 940,000 g.p.d.	Max. 1.480 MGD

Year 2021

January	Avg. Flow 1.075 MGD	Min. Flow 880,000 g.p.d.	Max. 1.460 MGD

Years Summary of Water Consumption

2006 Total Pumpage 207,719,000 gallons	2007 Total Pumpage 217,224,000 gallons
2008 Total Pumpage 229,613,000 gallons	2009 Total Pumpage 231,160,000 gallons
2010 Total Pumpage 239,326,000 gallons	2011 Total Pumpage 240,268,000 gallons
2012 Total Pumpage 253,492,000 gallons	2013 Total Pumpage 228,371,000 gallons
2014 Total Pumpage 230,973,000 gallons	2015 Total Pumpage 222,621,000 gallons
2016 Total Pumpage 254,531,000 gallons	2017 Total Pumpage 251,387,000 gallons
2018 Total Pumpage 241,322,000 gallons	2019 Total Pumpage 253,427,000 gallons
2020 Total Pumpage 259,413,000 gallons	

Year 2019

Jan.	Avg.	638,230 g.p.d.	Highest Day 791,000 gals.	Total	19,785,000 gallons
Feb.	Avg.	605,820 g.p.d.	Highest Day 758,000 gals.	Total	16,9630,00 gallons
March	Avg.	616,230 g.p.d.	Highest Day 946,000 gals.	Total	19,103,000 gallons
April	Avg.	697,800 g.p.d.	Highest Day 1.112 MGD	Total	20,934,000 gallons
May	Avg.	707,810 g.p.d.	Highest Day 889,000 gals.	Total	21,942,000 gallons
June	Avg.	766,200 g.p.d.	Highest Day 969,000 gals.	Total	22,986,000 gallons
July	Avg.	843,710 g.p.d.	Highest Day 1.174 MGD	Total	26,155,000 gallons
August	Avg.	747,230 g.p.d.	Highest Day 1.061 MGD	Total	23,164,000 gallons
Sept	Avg.	689,300 g.p.d.	Highest Day 830,000 gals.	Total	20,679,790 gallons
Oct.	Avg.	696,520 g.p.d.	Highest Day 1.116 MGD	Total	21,592,000 gallons
Nov.	Avg.	643,970 g.p.d.	Highest Day 830,000 gals.	Total	19,319,000 gallons
Dec.	Avg.	671,100 g.p.d.	Highest Day 875,000 gals.	Total	20,805,000 gallons

Year 2020

Jan.	Avg.	662,650 g.p.d.	Highest Day 769,000 gals.	Total	20,542,000 gallons
Feb	Avg.	682,280 g.p.d.	Highest Day 886,000 gals.	Total	19,786,000 gallons
March	Avg.	702,030 g.p.d.	Highest Day 837,000 gals.	Total	21,763,000 gallons
April	Avg.	731,070 g.p.d.	Highest Day 1.153 MGD	Total	21,932,000 gallons
May	Avg.	691,030 g.p.d.	Highest Day 915,000 gals.	Total	21,422,000 gallons
June	Avg.	806,030 g.p.d.	Highest Day 1.057 MGD	Total	24,181,000 gallons
July	Avg.	841,970 g.p.d.	Highest Day 1.431 MGD	Total	26,101,000 gallons
August	Avg.	878,710 g.p.d.	Highest Day 1.437 MGD	Total	27,240,000 gallons
Sept	Avg.	696,370 g.p.d.	Highest Day 1.058 MGD	Total	20,891,000 gallons
October	Avg.	677,160 g.p.d.	Highest Day 963,000 gals.	Total	20,992,000 gallons
Nov	Avg.	567,100 g.p.d.	Highest Day 850,000 gals.	Total	17,013,000 gallons
Dec	Avg.	566,130 g.p.d.	Highest Day 815,000 gals.	Total	17,550,000 gallons

Year 2021

Jan.	Avg.	565,650 g.p.d.	Highest Day 789,000 gals.	Total	17,535,000 gallons

Pump Capacity - Well #1- 400 g.p.m. Well #3 -900 g.p.m. Well #4 - 1200 g.p.m. Well #5 – 1,100 g.p.m. Well #6 – 800 g.p.m.

WWTP – Holding & Septage Receiving

2005	$ 87,562.01	**2006**	$101,115.11	**2007**	$152,201.07	**2008**	$210,441.47
2009	$183,815.34	**2010**	$197,653.66	**2011**	$220,576.28	**2012**	$236,224.70
2013	$235,336.46	**2014**	$203,938.32	**2015**	$210,644.47	**2016**	$220,473.17
2017	$232,358.23	**2018**	$245,767.74	**2019**	$219,822.80	**2020**	$204,656.11

2019	**Holdings (gals)**	**Grease (gals)**	**G Decant (gals)**	**Septage (gals)**	**S Decant (gals)**	**Total Billings**
January	1,230,000			2,000	77,700	$11,872.50
Feb	1,432,250			1,000	70,100	$13,255.50
March	1,614,450			11,750	161,800	$17,489.35
April	1,485,950			48,700	335,350	$22,462.85
May	1,589,200			27,600	349,400	$22,690.60
June	1,338,900			36,950	243,400	$18,458.95
July	1,504,450			17,000	302,900	$20,373.10
August	1,599,950			27,800	293,200	$21,380.60
September	1,405,900			14,000	217,450	$17,313.45
October	1,517,950			19,500	335,900	$21,418.60
November	1,265,950			11,500	256,950	$17,071.10
December	1,647,650			6,500	102,500	$16,036.20

2020	**Holdings (gals)**	**Grease (gals)**	**G Decant (gals)**	**Septage (gals)**	**S Decant (gals)**	**Total Billings**
January	1,426,900				71,000	$11,872.50
February	1,310,500			2,250	88,500	$12,786.50
March	1,471,600	900		5,000	173,650	$16,429.05
April	1,263,950			29,000	326,170	$19,570.85
May	1,168,670			4,450	308,250	$17,255.86
June	1,253,900			9,900	196,550	$15,390.45
July	1,459,700			16,450	212,650	$17,734.10
August	1,148,750			4,250	168,530	$13,594.50
September	1,276,950			22,700	299,450	$18,723.35
October	1,372,200	2,200		39,750	456,000	$24,386.35
November	1,231,850			33,650	301,700	$18,911.55
December	1,489,450			16,950	160,200	$16,683.35

2021	**Holdings (gals)**	**Grease (gals)**	**G Decant (gals)**	**Septage (gals)**	**S Decant (gals)**	**Total Billings**
January	1,284,600			6,650	77,250	$12,507.30

Rosewood Drive/TIF Expansion Project
The streetlight fixtures have been delivered and installation of poles are scheduled. We-Energies is finalizing the service installation.

CTH P and STH 60 Intersection Project and old Park-n-Lot Property
Ownership has been determined to be WisDOT. An appraisal was completed by WisDOT, and the Village of Jackson is preparing a reply for the purchase of land. Virtual meeting has been canceled and being rescheduled. WisDOT is looking at using the area for a job trailer location during the STH 45 resurfacing project this year.

Jackson Park Alley Project
The punch list has a few items remaining. Once completed the final pay request will be created.

Maplewood Farms
The RFP for sewer service is being discussed at this meeting. The item will then be removed from the report until a new development is proposed.

Morning Meadows Subdivision
The Phase 2 preconstruction meeting was held on Tuesday, February 9, 2021. Weather has pushed back the construction start date. The new proposed started date is March 8, 2021. Phase 2 will be completed in June 2021. Phase 3 will start depending on the sale of lots in Phase 1. Spec home construction will start soon in Phase 1 once the final plat is recorded.

Trilogy Consulting - Study / Impact Fees
We are working on collection the necessary items for the study. The Park and Open Space Plan, and the bids from the new Police and Fire Building portion are items necessary for the impact fee study.

Jackson Municipal Complex
On schedule for a September 2021 completion. Discussion on internet and phone system at this meeting.

Chateau Dr/Hickory Lane Reconstruction Project
We are in the process working on the final pay request to close out the project. Hoping to have final documents at this meeting, but contractor has not been responding in a timely matter. The same will happen with the Jackson Park Alley Project at the next meeting since the same contractor is involved.

Spruce Street/Ridgeway Drive Extension Project
We are working with WisDOT for the permits to access STH 60 for Ridgeway Drive. The project will be completed in 2021. We are working on the final response back to WisDOT.

Hunters Road Reconstruction Project and Highland Road Storm Sewer Project
The streetlight poles and fixtures have been assembled and readied for installation. We-Energies is finalizing the service installation.

Respectfully submitted, Brian W. Kober, P.E.